GA32-0100-1

Storage Subsystem Library

IBM 3990 Storage Control Planning, Installation, and Storage Administration Guide

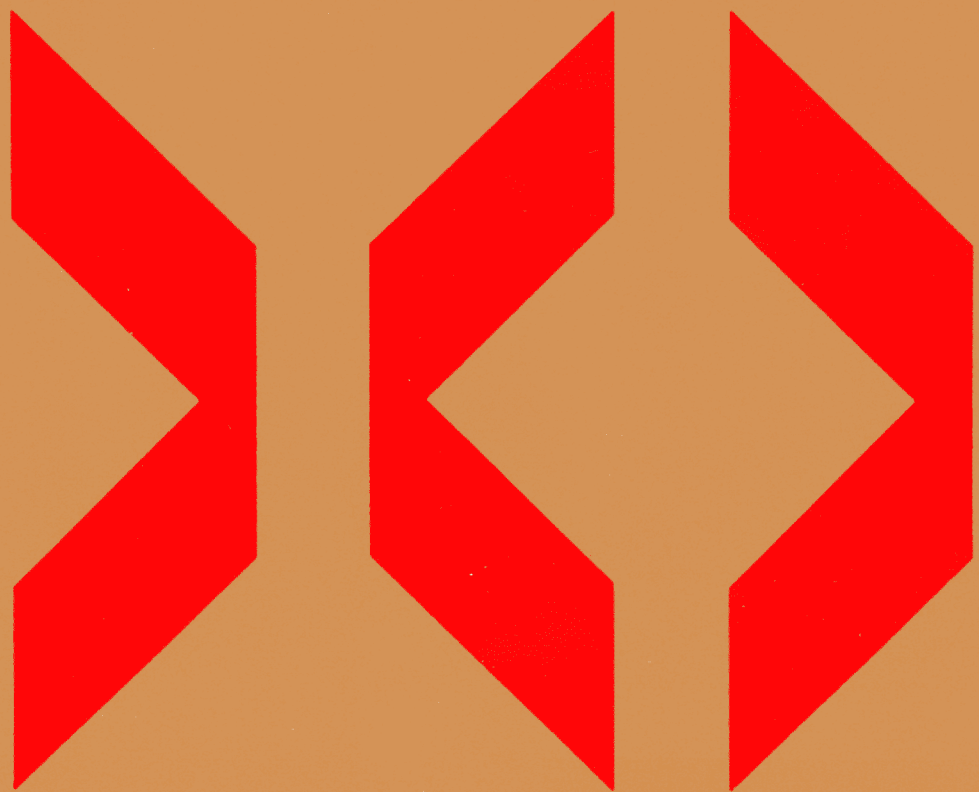

Storage Subsystem Library

GA32-0100-1

IBM 3990 Storage Control Planning, Installation, and Storage Administration Guide

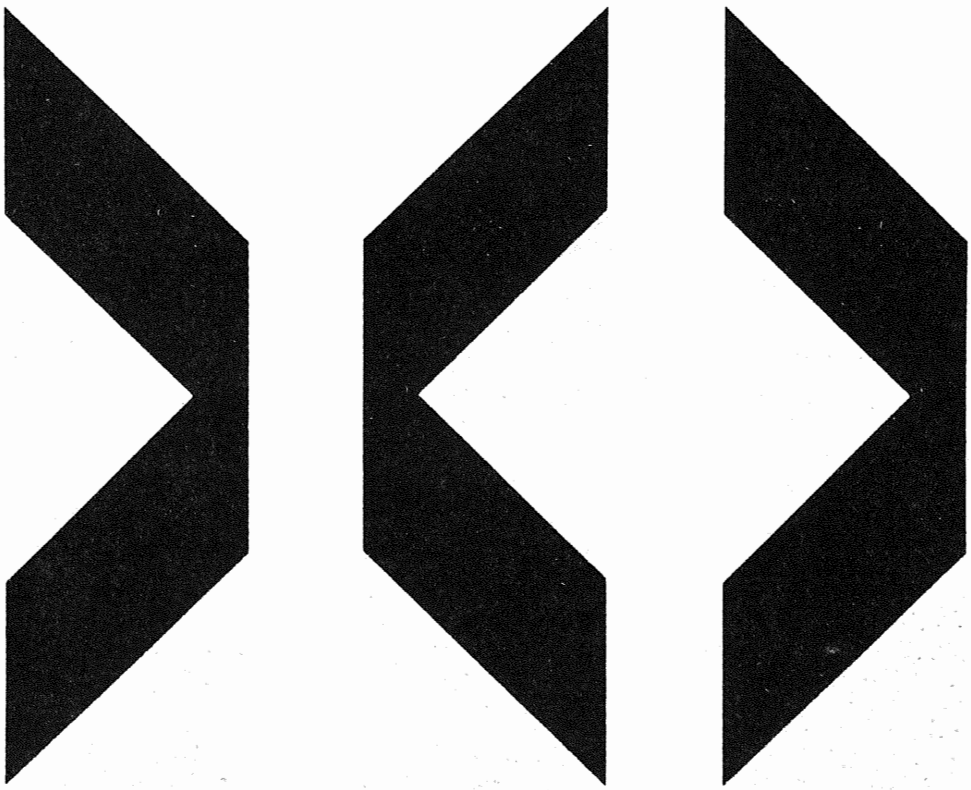

Federal Communications Commission (FCC) Statement

Warning: This equipment generates, uses, and can radiate radio frequency energy and if not installed and used in accordance with the instructions manual, may cause interference to radio communications. It has been tested and found to comply with the limits for a Class A computing device pursuant to Subpart J of Part 15 of FCC Rules, which are designed to provide reasonable protection against such interference when operated in a commercial environment. Operation of this equipment in a residential area is likely to cause interference in which case the user at his own expense will be required to take whatever measures may be required to correct the interference.

Instructions to User: Properly shielded and grounded cables and connectors must be used for connection to peripherals in order to meet FCC emission limits. Proper cables are available from IBM authorized dealers. IBM is not responsible for any radio or television interference caused by using other than recommended cables or by unauthorized modifications to this equipment. It is the responsibility of the user to correct such interference.

Second Edition (July 1988)

This is the second edition of the IBM 3990 Storage Control Planning, Installation and Storage Administration Guide. Changes from the first edition are marked with a bar (|) to the left of the text.

Changes are made periodically to the information herein; before using this publication in connection with the operation of IBM systems (or equipment), refer to the latest *IBM System/370, 30xx, and 4300 Processors Bibliography*, GC20-0001, for the editions that are applicable and current.

References in this publication to IBM products, programs, or services do not imply that IBM intends to make these available in all countries in which IBM operates. Any reference to an IBM licensed program in this publication is not intended to state or imply that only IBM's licensed program may be used. Any functionally equivalent program may be used instead.

Publications are not stocked at the address given below. Requests for IBM publications should be made to your IBM representative or to the IBM branch office serving your locality.

A form for readers' comments is provided at the back of this publication. If the form has been removed, comments may be addressed to IBM Corporation, General Products Division, Department 61C, Tucson, Arizona, U.S.A. 85744. IBM may use or distribute whatever information you supply in any way it believes appropriate without incurring any obligation to you.

© Copyright International Business Machines Corporation 1987, 1988

Trademarks

The following names are trademarks of IBM and will be used throughout this publication:

MVS™

MVS/ESA™

MVS/SP™

MVS/XA™

VM™

3090™

ESA/370™—Enterprise Systems Architecture/370™

MVS/DFP™

Summary of Changes

Second Edition, July 1988

Technical Changes

The following feature numbers have been changed to engineering changes:

- 9003 - 3990 AA4 Installation/Maintenance Update Feature has been changed to engineering change EC444944 ECA130.
- 9052 - 3990 AD4/AE4 Installation/Maintenance Update Feature has been changed to engineering change EC465359 ECA131.

Other Changes

This book has also been revised with minor technical updates. The book, *Cache Device Administration*, has also been added to the Storage Subsystem Library and an acronym list has been added to this book.

Contents

Preface 1
About This Book 1
Terminology 3
Storage Subsystem Library 4
SSL Ordering Information 7
SSL Binder Information 7
Related Publications 8

Chapter 1. 3990 Overview 9
3990 Standards of Data Availability and Performance 10
3990 Standards of Reliability, Availability, and Serviceability 10
3990 Performance Features 11
Faster and More Efficient Microprocessing 11
Four Storage Paths 12
Cache (3990 Model 3 Only) 12
Fast Write Capabilities (3990 Model 3 Only) 13
4.5 or 3.0 Megabytes Per Second Channel Speed 13
3990 Reliability, Availability, and Serviceability Features 13
Dual Copy 14
Two Independent Storage Clusters 14
Support Facility 14
Service Information Messages (SIMs) 16
Ease of Migration 16
Nondisruptive DASD Installation Capability 16
Intermixed Strings of DASD 17
Environmental Features 17

Chapter 2. Introducing the 3990 Family of Storage Controls 19
Introducing 3990 Terms and Concepts 20
3990 Hardware Components 20
Two Subsystem Operating Modes (DLSE and DLS Support Modes) 21
Two Storage Director Capabilities (Multipath and Single-Path) 22
Two DASD Capabilities (2-Path and 4-Path) 22
Logical DASD Subsystem 22
3990 Model 1 23
Upgrading a 3990 Model 1 to a 3990 Model 2 or 3 24
3990 Model 2 24
Upgrading a 3990 Model 2 to a 3990 Model 3 25
3990 Model 2 Dual-Frame Configuration Capability 25
3990 Model 3 26
Cache 27
Nonvolatile Storage (NVS) 27
3990 Model 3 Dual-Frame Configuration Capability 28
3990 Model 2 or 3 in DLS Mode Attached to 2-Path DASD Strings 29
3990 Model 2 or 3 in DLSE Mode Attached to 2-Path DASD Strings Intermixed with a 4-Path String 30
3990 Features 32
Remote/Local Capability 32
3990 Feature Combinations for Four Channels per Cluster 32
3990 Feature Combinations for Eight Channels per Cluster 32
3990 Channel Switch Features 33
3380 Features 40

Features of the 3380 for Attachment to 3990 Storage Controls 40
Processor Attachment 40
Host Channel Attachment 40
DASD Attachment 41
Maximum DASD Configuration 43
Minimum DASD Configuration 44

Chapter 3. 3990 Input/Output Operations 45
Data and Command Formats Supported by the 3990 45
Basic Noncache Input/Output Operations 45
Basic Noncache Seek, Search, and Locate Record Operations 45
Basic Noncache Read Operations 45
Basic Noncache Write Operations 46
3990 Model 3 Basic Cache Operations 46
Cache Status Defaults 46
Basic Cache Seek, Search, and Locate Record Operations 46
Basic Cache Read Operations 47
Basic Cache Write Operations 48
Cache Fast Write Operations 49
3990 Model 3 Extended Function Subsystem Operations 51
DASD Fast Write 51
Dual Copy 53
3990 Subsystem Cache Management 54
Track Slots and Track Data 54
Least Recently Used (LRU) Algorithm 55
Cache Modes 56

Chapter 4. Subsystem Performance Considerations 59
3990 Performance Guidelines 59
Performance Recommendations for Noncached DASD Operations 60
Configuration and Performance 60
Subsystem Components 60
Configuration Conclusions 65
Performance Variables 65

Chapter 5. Reliability, Availability, and Serviceability 67
Support Facility 67
Service Information Messages (SIMs) and SIM Alert Messages 67
SIM Alert Message 68
Service Information Messages (SIMs) 68
Considerations for Console Message Handlers 68
Error Logging 69
Cache and NVS Availability 69
Concurrent Maintenance Provided by the 3990 Model 2 and 3 69
Storage Path and Cluster Concurrent Maintenance Capabilities (3990 Model 2 and 3) 70
Cache and NVS Concurrent Maintenance Capabilities (3990 Model 3) 70
Concurrent Maintenance Operations 70
Remote Support 70
Remote Support Access Code 71
Fencing 71
Types of Fencing by the 3880 71
Types of Fencing by the 3990 72
Unfencing 73
ICKDSF CLEARFENCE Command 74
Clearing a Storage Path Fence Status 74

Clearing a Storage Path Fence Status in a CMS or Stand-Alone Environment 75
DEVSERV PATHS Messages (MVS/ESA and MVS/XA) 75
Storage Path Restart 75
Observe These Cautions Before You Restart a Storage Path 75
Storage Path Restart Operation 76
When to Restart a Storage Path for Recovery 76

Chapter 6. Using the Service Information Messages 77
MVS and VM SIM Alert Message Formats 77
MVS and VM SIM Alert Message Fields 78
VSE SIM Alert Message Formats 79
Establishing SIM Handling Procedures 79
Under MVS 80
Under VM 80
Under VSE 81
EREP Report Requests 81
EREP Report Generation 83

Chapter 7. Planning the Physical Configuration 87
Pre-Installation Planning Tasks 87
Channel Interface Cable Requirements and Position Required for 3990 on a Channel Interface 88
Valid Configurations 88
3990 Single-Frame Configurations 88
3990 Dual-Frame Configurations 88
Dual-Frame Interconnections 89
Remote Support Communications Line Requirements 89
Remote Power Sequence Time Improvement 89
Specify the Cache Access Error Option in the Vital Product Data 89
Subsystem Identifiers (SSIDs) 90
Assigning the Number of Addressable Devices for a Logical DASD Subsystem 98
DASD String Addressing 99
Assigning Control Unit Addresses for Storage Directors 99
DASD Configuration Guidelines 101
Assigning Device Addresses for DLSE Mode 102
Assigning Device Addresses for DLS Mode 103
Summary of 3990 Addressing Requirements 104
Reconfiguring a DASD Subsystem 105
DLSE Mode—Nondisruptive Installation of a 4-Path DASD String or a B-Unit 105
DLS/DLSE Mode with Intermixed 2-Path and 4-Path Strings—Adding a 2-Path String or Adding B-Units to a 2-Path String 106
Replacing Existing Strings or Changing 2-Path Strings to 4-Path Strings . . 106

Chapter 8. Installing Under MVS 109
Minimum MVS Program Levels for 3990 Basic Operations 109
MVS/ESA and MVS/XA Software Capabilities for 3990 Model 3 Extended Functions 110
Supported Channel Commands and Data Formats 111
Migrating to 3990 111
Access Codes 111
Overriding the Default Caching Mode for EXCP, SAM, ISAM, AND DAM 112
Defining the I/O Configuration to the Processor in MVS/ESA and MVS/XA . . . 113
MVS IOCP Examples 113
DLSE Mode 113
DLS Mode 114

IOCP Examples . . . 114
MVS/XA DLSE IOCP Example . . . 115
MVS/XA DLS IOCP Examples . . . 116
MVS/370 DLSE IOCP Example . . . 118
MVS/370 DLS IOCP Examples . . . 119
Managing a 3990 in Multihost MVS Environments . . . 121
Considerations for Console Message Handlers . . . 121

Chapter 9. 3990 Model 3 Subsystem Performance and Status Monitoring in an MVS Environment . . . 123
Performance Monitoring . . . 123
Cache RMF Reporter . . . 123
Status Monitoring . . . 127
Obtaining Reports Through Access Method Services (IDCAMS) . . . 127
Methods of Running IDCAMS Jobs . . . 127
Using LISTDATA to Calculate Hit Ratios and Read-to-Write Ratios . . . 128
LISTDATA WTO Option . . . 134

Chapter 10. Using Dual Copy, DASD Fast Write, and Cache Fast Write in MVS Environments . . . 135
Using Dual Copy in MVS/ESA and MVS/XA Environments . . . 135
Volume-Specific Examples of Using Dual Copy . . . 136
DASD Fast Write in MVS/ESA and MVS/XA Environments . . . 139
Guidelines for Using Cache Fast Write with DFSORT in MVS Environments . . . 140
MVS Cache and Cache Fast Write Data Set Selection Guidelines . . . 141
MVS DASD Fast Write Data Selection Guidelines . . . 142

Chapter 11. IDCAMS Reference—MVS Support for 3990 Basic Operations . . . 143
LISTDATA (Basic Function) . . . 143
Required Parameters . . . 143
Optional Parameters . . . 144
Examples of Using LISTDATA to Generate Basic Function Subsystem Status Reports . . . 146
Reports . . . 149
SETCACHE (Basic Function) . . . 156
Required Parameters . . . 156
Optional Parameters . . . 157
Examples of Using SETCACHE to Manage Cache Storage (Basic Function) 158

Chapter 12. Installation and Storage Administration Under VM . . . 161
Minimum VM Program Levels for 3990 Model 1 and 2 Support . . . 161
VM Software Capabilities for 3990 Model 3 Basic Caching . . . 161
Supported Channel Commands and Data Formats . . . 161
Defining the Subsystem to VM for Basic Caching Support . . . 161
Assigning I/O Addresses or Device Numbers . . . 162
Defining the Real I/O Configuration to VM . . . 162
Defining the I/O Configuration to the Processor in VM . . . 163
VM IOCP Examples . . . 163
DLSE Mode . . . 163
DLS Mode . . . 164
IOCP Examples . . . 164
VM/XA DLSE IOCP Example . . . 165
VM/XA DLS IOCP Examples . . . 166
VM/370 DLSE IOCP Examples . . . 168
VM/370 DLS IOCP Examples . . . 170
VM/SP HPO CMS Support . . . 172

Storage Administration Under VM 173
Considerations for Console Message Handlers 173
VM Performance 173
Using VM/Monitor 174
VM Channel Command Sequence Requirements 175
Subsystem Performance Tuning 175

Chapter 13. Installation and Storage Administration Under VSE 177
Minimum VSE Program Levels for 3990 Models 1 and 2 Support 177
Supported Channel Commands and Data Formats 177
Distributing Your I/O Load 177
Defining I/O Addresses 177
Identifying Publication Requirements 178
Storage Administration Under VSE 178
Preparing Volumes for Use by VSE 178
Considerations for Console Message Handlers 179
VSE Channel Command Sequence Requirements 179
VSE Performance 179

Appendix A. Using the Operator Panel 181
Procedures for Switching Power On and Off 181
Emergency Power Off (Unit Emergency Switch) 181
Subsystem Power Indicators 186
Switching 3990 Power On from a Processor 186
Switching 3990 Power On from the Operator's Panel 186
Switching Power Off from a Processor 186
Switching Power Off from the Operator's Panel 186
Storage Cluster 0 and 1 187
Enabling Remote Support Session 187
Disabling Remote Support Session 187
Storage Paths/Channels 187
Using Remote or Local Channel Switch Control 187
Enabling Channels to Storage Paths 188
Disabling Channels to Storage Paths 188
Restarting a Storage Path 188

Appendix B. 3990 Configuration Planning Worksheets 189
Introducing the 3990 Configuration Planning Worksheets 189
How to Select the Worksheets for the Subsystem You Are Installing 190
3990 Channel Worksheets 192
3990 Channel Worksheet—Storage Cluster 0 (DLS Mode) Frame _____ . . . 192
3990 Channel Worksheet—Storage Cluster 1 (DLS Mode) Frame _____ . . . 193
3990 Channel Worksheet—Storage Cluster 0 (DLSE Mode) Frame _____ . . 194
3990 Channel Worksheet—Storage Cluster 1 (DLSE Mode) Frame _____ . . 195
3990 Subsystem Configuration Worksheets 196
3990 Model 1 Subsystem Configuration Worksheet (DLS Mode) 196
3990 Model 2 or 3 Subsystem Configuration Worksheet (DLSE Mode) 197
3990 Model 2 or 3 Subsystem Configuration Worksheet (DLS Mode) 198
3990 Model 2 or 3 Subsystem Configuration Worksheet (DLSE Mode With Intermixed 2-Path and 4-Path DASD Strings) 199
3990 Model 2 or 3 Subsystem Configuration Worksheet (DLSE Mode With Intermixed 4-Path and 2-Path DASD Strings) 200
Dual-Frame 3990 Model 2 or 3 Subsystem Configuration Worksheet (DLSE Mode) 201
Dual-Frame 3990 Model 2 or 3 Subsystem Configuration Worksheet (DLS Mode) 202

Dual-Frame 3990 Model 2 or 3 Subsystem Configuration Worksheet (DLSE Mode With Intermixed 2-Path and 4-Path DASD Strings) 203
Dual-Frame 3990 Model 2 or 3 Subsystem Configuration Worksheet (DLSE Mode With Intermixed 4-Path and 2-Path DASD Strings) 204
Dual-Frame 3990 Model 2 or 3 Subsystem Configuration Worksheet (DLS and DLSE Mode) 205
Dual-Frame 3990 Model 2 or 3 Subsystem Configuration Worksheet (DLSE and DLS Mode) 206
Dual-Frame 3990 Model 2 or 3 Subsystem Configuration Worksheet (DLS and DLSE Mode With Intermixed 2-Path and 4-Path DASD Strings) 207
Dual-Frame 3990 Model 2 or 3 Subsystem Configuration (DLS and DLSE Mode With Intermixed 4-Path and 2-Path DASD Strings) 208
Dual-Frame 3990 Model 2 or 3 Subsystem Configuration (DLSE Mode With Intermixed 2-Path and 4-Path DASD Strings and DLS Mode) 209
Dual-Frame 3990 Model 2 or 3 Subsystem Configuration (DLSE Mode With Intermixed 4-Path and 2-Path DASD Strings and DLS Mode) 210
Dual-Frame 3990 Model 2 or 3 Subsystem Configuration (DLSE Mode With Intermixed 2-Path and 4-Path DASD Strings and DLSE Mode) 211
Dual-Frame 3990 Model 2 or 3 Subsystem Configuration (DLSE Mode With Intermixed 4-Path and 2-Path DASD Strings and DLSE Mode) 212
Dual-Frame 3990 Model 2 or 3 Subsystem Configuration (DLSE Mode and DLSE Mode With Intermixed 2-Path and 4-Path DASD Strings) 213
Dual-Frame 3990 Model 2 or 3 Subsystem Configuration (DLSE Mode and DLSE Mode With Intermixed 4-Path and 2-Path DASD Strings) 214

Appendix C. 3990 Vital Product Data Worksheets 215
How to Use the Vital Product Data Worksheets 215
3990 Features 218
Subsystem Mode (DLS/DLSE) 218
Subsystem Identifiers (SSIDs) 219
Channel Speed (Cluster 0) Frame _____ 221
Channel Speed (Cluster 1) Frame _____ 221
Assigning Channels to 3990 Model 1 Storage Directors 222
Specifying the Number of Addressable Devices and Control Unit Addresses for 3990 Models 2 and 3 224
DLSE Mode Only—Specifying DASD String Type (64 Devices Only) 231
Cache Access Error Option—DLSE Mode and DLS Mode (Subsystem Attached to Storage Path 0) 232
Cache Access Error Option—DLS Mode Only (Subsystem Attached to Storage Path 1) 232
Vital Product Data Supplied by the Service Representative 233
Machine Type and Data Link Type 233
Serial Number/Hardware Level 233
Nonvolatile Storage Data 233

Appendix D. Messages and Codes 235
MVS Messages and Codes 235
MVS—IDCAMS Messages and Codes 238
MVS—DFDSS Messages and Codes 243
DFDSS DUMP Operation—OPTIMIZE Parameter 243
VM/SP and VM/SP HPO Messages and Codes 244
VM/XA Messages 246
VSE Messages and Codes 247
0P04I PATH FENCE 247
0P05I OPER INFO 247
0P64I MAINT REQ 247

0P60I PATH ERROR 247

Appendix E. Installation Planning Representative 3990 Configuration and Cable Planning Worksheets 249
Introducing the 3990 Configuration and Cable Planning Worksheets 249
How to Select the Worksheets for the Subsystem You Are Installing 250
3990 Channel Worksheets 252
3990 Channel Worksheet—Storage Cluster 0 (DLS Mode) Frame _____ . . . 252
3990 Channel Worksheet—Storage Cluster 1 (DLS Mode) Frame _____ . . . 253
3990 Channel Worksheet—Storage Cluster 0 (DLSE Mode) Frame _____ . . 254
3990 Channel Worksheet—Storage Cluster 1 (DLSE Mode) Frame _____ . . 255
3990 Subsystem Configuration Worksheets 256
3990 Model 1 Subsystem Configuration Worksheet (DLS Mode) 256
3990 Model 2 or 3 Subsystem Configuration Worksheet (DLSE Mode) 257
3990 Model 2 or 3 Subsystem Configuration Worksheet (DLS Mode) 258
3990 Model 2 or 3 Subsystem Configuration Worksheet (DLSE Mode With Intermixed 2-Path and 4-Path DASD Strings) 259
3990 Model 2 or 3 Subsystem Configuration Worksheet (DLSE Mode With Intermixed 4-Path and 2-Path DASD Strings) 260
Dual-Frame 3990 Model 2 or 3 Subsystem Configuration Worksheet (DLSE Mode) 261
Dual-Frame 3990 Model 2 or 3 Subsystem Configuration Worksheet (DLS Mode) 262
Dual-Frame 3990 Model 2 or 3 Subsystem Configuration Worksheet (DLSE Mode With Intermixed 2-Path and 4-Path DASD Strings) 263
Dual-Frame 3990 Model 2 or 3 Subsystem Configuration Worksheet (DLSE Mode With Intermixed 4-Path and 2-Path DASD Strings) 264
Dual-Frame 3990 Model 2 or 3 Subsystem Configuration Worksheet (DLS and DLSE Mode) 265
Dual-Frame 3990 Model 2 or 3 Subsystem Configuration Worksheet (DLSE and DLS Mode) 266
Dual-Frame 3990 Model 2 or 3 Subsystem Configuration Worksheet (DLS and DLSE Mode With Intermixed 2-Path and 4-Path DASD Strings) 267
Dual-Frame 3990 Model 2 or 3 Subsystem Configuration (DLS and DLSE Mode With Intermixed 4-Path and 2-Path DASD Strings) 268
Dual-Frame 3990 Model 2 or 3 Subsystem Configuration (DLSE Mode With Intermixed 2-Path and 4-Path DASD Strings and DLS Mode) 269
Dual-Frame 3990 Model 2 or 3 Subsystem Configuration (DLSE Mode With Intermixed 4-Path and 2-Path DASD Strings and DLS Mode) 270
Dual-Frame 3990 Model 2 or 3 Subsystem Configuration (DLSE Mode With Intermixed 2-Path and 4-Path DASD Strings and DLSE Mode) 271
Dual-Frame 3990 Model 2 or 3 Subsystem Configuration (DLSE Mode With Intermixed 4-Path and 2-Path DASD Strings and DLSE Mode) 272
Dual-Frame 3990 Model 2 or 3 Subsystem Configuration (DLSE Mode and DLSE Mode With Intermixed 2-Path and 4-Path DASD Strings) 273
Dual-Frame 3990 Model 2 or 3 Subsystem Configuration (DLSE Mode and DLSE Mode With Intermixed 4-Path and 2-Path DASD Strings) 274
3990 Power Sequence Control Cable Worksheets 275
3990 Model 1 Power Sequence Control Cable Worksheet (DLS Mode) 275
3990 Model 2 or 3 Power Sequence Control Cable Worksheet (DLSE Mode) 276
3990 Model 2 or 3 Power Sequence Control Cable Worksheet (DLS Mode) . 277
3990 Model 2 or 3 Power Sequence Control Cable Worksheet (DLSE Mode With Intermixed 2-Path and 4-Path DASD Strings) 278
3990 Model 2 or 3 Power Sequence Control Cable Worksheet (DLSE Mode With Intermixed 4-Path and 2-Path DASD Strings) 279

Dual-Frame 3990 Model 2 or 3 Power Sequence Control Cable Worksheet (DLSE Mode) . . . 280
Dual-Frame 3990 Model 2 or 3 Power Sequence Control Cable Worksheet (DLS Mode) . . . 281
Dual-Frame 3990 Model 2 or 3 Power Sequence Control Cable Worksheet (DLSE Mode With Intermixed 2-Path and 4-Path DASD Strings) . . . 282
Dual-Frame 3990 Model 2 or 3 Power Sequence Control Cable Worksheet (DLSE Mode With Intermixed 4-Path and 2-Path DASD Strings) . . . 283
Dual-Frame 3990 Model 2 or 3 Power Sequence Control Cable Worksheet (DLS and DLSE Mode) . . . 284
Dual-Frame 3990 Model 2 or 3 Power Sequence Control Cable Worksheet (DLSE and DLS Mode) . . . 285
Dual-Frame 3990 Model 2 or 3 Power Sequence Control Cable Worksheet (DLS and DLSE Mode With Intermixed 2-Path and 4-Path DASD Strings) . 286
Dual-Frame 3990 Model 2 or 3 Power Sequence Control Cable Worksheet (DLS and DLSE Mode With Intermixed 4-Path and 2-Path DASD Strings) . 287
Dual-Frame 3990 Model 2 or 3 Power Sequence Control Cable Worksheet (DLSE Mode With Intermixed 2-Path and 4-Path DASD Strings and DLS Mode) . . . 288
Dual-Frame 3990 Model 2 or 3 Power Sequence Control Cable Worksheet (DLSE Mode With Intermixed 4-Path and 2-Path DASD Strings and DLS Mode) . . . 289
Dual-Frame 3990 Model 2 or 3 Power Sequence Control Cable Worksheet (DLSE Mode With Intermixed 2-Path and 4-Path DASD Strings and DLSE Mode) . . . 290
Dual-Frame 3990 Model 2 or 3 Power Sequence Control Cable Worksheet (DLSE Mode With Intermixed 4-Path and 2-Path DASD Strings and DLSE Mode) . . . 291
Dual-Frame 3990 Model 2 or 3 Power Sequence Control Cable Worksheet (DLSE Mode and DLSE Mode With Intermixed 2-Path and 4-Path DASD Strings) . . . 292
Dual-Frame 3990 Model 2 or 3 Power Sequence Control Cable Worksheet (DLSE Mode and DLSE Mode With Intermixed 4-Path and 2-Path DASD Strings) . . . 293

Acronym List . . . 295

Glossary . . . 297

Bibliography . . . 309

Index . . . 321

Figures

1. Storage Subsystem Library 6
2. 3990 Model 3 Storage Control with 4-Path 3380 Models AJ4/BJ4 and AK4/BK4 9
3. Examples of Data Transfer Capabilities of DLS and DLSE Subsystems . . 12
4. 3990 Model 2 in DLSE Mode Attached to 4-Path DASD Strings 19
5. 3990 Model 1 in DLS Mode Attached to 2-Path DASD Strings 23
6. 3990 Model 2 in DLSE Mode Attached to 4-Path DASD Strings 25
7. 3990 Model Compatibility in Dual-Frame Configurations 25
8. 3990 Model 3 in DLSE Mode Attached to 4-Path DASD Strings 26
9. 3990 Model 3 in DLS Mode Attached to 2-Path DASD Strings 29
10. 3990 Model 2 in DLSE Mode Attached to 2-Path DASD Strings Intermixed with a 4-Path String 31
11. 3990 Feature Combinations for Four Channels Per Cluster 32
12. 3990 Feature Combinations for Eight Channels Per Cluster 33
13. 3990 Model 2 and 3 Standard Channel Attachment in DLSE Mode 34
14. 3990 Model 2 and 3 Standard Channel Attachment in DLS Mode 35
15. 3990 Model 1 Standard Channel Attachment 36
16. 3990 Model 2 or 3 in DLSE Mode with the Four-Channel Switch, Additional Feature 37
17. 3990 Model 2 or 3 in DLS Mode with the Four-Channel Switch, Additional Feature 38
18. 3990 Model 1 with the Four-Channel Switch, Additional Feature 39
19. 3380 Models that can be Intermixed on the Same String 41
20. 3380 Models and Capabilities that can be Intermixed in the Same Subsystem 42
21. 3990 Maximum DASD Configurations 43
22. Minimum 3990 Model 2 or 3 Configuration in DLSE Mode 44
23. Cache Fast Write Operation 50
24. DASD Fast Write Operation 52
25. Dual Copy Operation 53
26. Example of an LRU List 56
27. Comparing 3990 Model 2 Service Time with a 3990 Model 3 in DLSE Mode Read or Fast Write Hit 61
28. 3990 Model 3 Write Without Cache Fast Write (Hit or Miss) 63
29. 3990 Model 3 Read Hit and Cache Fast Write Hit 64
30. 3990 Model 3 Read Miss, Cache Fast Write Miss, or Front End Miss at Sector Zero 64
31. 3990 Model 3 Front End Miss Beyond Sector Zero 65
32. 3990 Model 3 Service Times 66
33. SIM Alert Message Format Examples for MVS and VM Environments . . . 78
34. MVS and VM SIM Alert Message Fields 78
35. Meaning of the SIM Alert Severity Field by Failing Component 79
36. VSE SIM Alert Format 79
37. Sample of an MVS Report Request 82
38. Sample of a VM Report Request 82
39. Sample of a VSE Report Request 83
40. Example of a Formatted Detail Edit Report 84
41. Example of an Unformatted Detail Edit and Summary Report 84
42. Example of SIMs in System Exception Informational Messages 85
43. Example of SIMs in Unformatted System Exception Informational Messages 85
44. 3990 SSID Requirements 90

45. Assigning an SSID for a 3990 Model 1 in DLS Mode 92
46. Assigning an SSID for a 3990 Model 2 or 3 in DLSE Mode 93
47. Assigning SSIDs for a 3990 Model 2 or 3 in DLS Mode 94
48. Assigning SSIDs for Dual-Frame 3990 Model 2s or 3s in DLSE Mode 95
49. Assigning SSIDs for a Dual-Frame 3990 Model 2 or 3 in DLS Mode 96
50. Assigning SSIDs for a Dual-Frame 3990 Model 2 or 3 in DLSE and DLS Mode 97
51. Number of Addressable Devices in DLSE Mode 98
52. Number of Addressable Devices in DLS Mode 98
53. DLS Mode I/O Address Composition for 8, 16, and 32 Devices 99
54. DLSE Mode I/O Address Composition for 32 and 64 Devices 100
55. Summary of 3990 Addressing Requirements 104
56. MVS/XA, DLSE, 4 Channel Paths, 3090-400 115
57. MVS/XA, DLS, 4 Channel Paths, 3090-400 Two Channel Paths To Each Logical DASD Subsystem 116
58. MVS/XA, DLS, 2 Channel Paths, 3090-400 Two Channel Paths To Each Logical DASD Subsystem 117
59. MVS/370 DLSE, 4 Channel Paths, 3090-200 or 400 in Partitioned Mode . . 118
60. MVS/370, DLS, 4 Channel Paths, 3090-200 Multiprocessor Two Channel Paths To Each Logical DASD Subsystem 119
61. MVS/370, DLS, 2 Channel Paths, 3090-200 Multiprocessor Two Channel Paths To Each Logical DASD Subsystem 120
62. 3990 Model 3 Subsystem Aggregation Report 125
63. 3990 Model 3 Device Aggregation Report 126
64. 3990 Model 3 Caching Subsystem Summary Report 126
65. Sample Subsystem Counters Report 129
66. Sample Subsystem Counters Report Legend 130
67. Sample Subsystem Status Report 131
68. Sample Subsystem Status Report Legend 132
69. MVS Cache and Cache Fast Write Data Selection Guidelines 141
70. MVS DASD Fast Write Data Set Selection Guidelines 142
71. Sample Subsystem Counters Report for the IBM 3990 Model 3 150
72. Subsystem Counters Report Legend for the IBM 3990 Model 3 151
73. Sample Subsystem Status Report for the IBM 3990 Model 3 153
74. Subsystem Status Report Legend for the IBM 3990 Model 3 154
75. VM/XA, DLSE, 4 Channel Paths, 3090-400 165
76. VM/XA, DLS, 4 Channel Paths, 3090-400 Two Channel Paths To Each Logical DASD Subsystem 166
77. VM/XA, DLS, 2 Channel Paths, 3090-400 Two Channel Paths To Each Logical DASD Subsystem 167
78. VM/370 DLSE, 2 Channel Paths, 3090-200 or 400 in Partitioned Mode . . 168
79. VM/370 DLSE, 4 Channel Paths, 3090-200or 400 in Partitioned Mode . . . 169
80. VM/370, DLS, 2 Channel Paths, 3090-200 Multiprocessor Two Channel Paths To Each Logical DASD Subsystem 170
81. VM/370, DLS, 4 Channel Paths, 3090-200 Multiprocessor Four Channel Paths To Each Logical DASD Subsystem 171
82. IBM 3990 Model 2 and 3 Operator Panel in DLSE Mode 183
83. IBM 3990 Model 2 and 3 Operator Panel in DLS Mode 184
84. IBM 3990 Model 1 Operator Panel in DLS Mode 185
85. Cross-Reference List to the 3990 Configuration Planning Worksheets . . 190
86. Vital Product Data Worksheets Required for Each 3990 Model 215
87. Cross-Reference List to the IPR 3990 Configuration and Cable Planning Worksheets 250
88. Example of 3380 Model AE4 and AK4 2-Path Strings Attached to a 3880 . 305
89. Example of 3380 2-Path Strings Attached to a 3990 Model 2 or 3 in DLS Support Mode 306

90. Example of 3380 Enhanced Subsystem Model 4-Path Strings Attached to a 3990 in DLSE Support Mode 307
91. Example of 3380 2-Path and 4-Path Strings Attached to a 3990 in DLSE Support Mode 308

Preface

This guide is part of the Storage Subsystem Library (SSL) — a set of books that provides information about the hardware components of IBM disk storage subsystems. The SSL includes both direct access storage devices (DASD) and storage control publications. This guide describes the IBM 3990 Storage Control models and their operation in storage subsystems that include IBM 3380 Direct Access Storage Devices (DASD).

About This Book

This book is a guide for the storage administrator, system programmer, or hardware performance specialist who is responsible for providing and maintaining required levels of storage subsystem availability and performance. An appendix describing how to use the operator panel is provided for operators.

This guide assumes you are familiar with the material in *IBM 3990 Storage Control Introduction* and *IBM 3380 Direct Access Storage Introduction*. To use this guide productively, you should plan to read or have available the other appropriate SSL books.

The information in this guide is organized as follows:

- Chapter 1, "3990 Overview" on page 9, provides brief descriptions of the performance and RAS enhancements of the 3990.
- Chapter 2, "Introducing the 3990 Family of Storage Controls" on page 19, describes the 3990 models, features, and attachments.
- Chapter 3, "3990 Input/Output Operations" on page 45, describes subsystem-level basic storage control operations without cache, basic cache and cache fast write operations, 3990 Model 3 extended function operations, and 3990 Model 3 cache management functions.
- Chapter 4, "Subsystem Performance Considerations" on page 59, describes the performance of the 3990.
- Chapter 5, "Reliability, Availability, and Serviceability" on page 67, describes the support facility, error logging, service information messages (SIMs), cache and nonvolatile storage availability, and serviceability features.
- Chapter 6, "Using the Service Information Messages" on page 77, describes how to get the additional error information from EREP reports.
- Chapter 7, "Planning the Physical Configuration" on page 87, describes the tasks necessary to prepare to install a 3990.
- Chapter 8, "Installing Under MVS" on page 109, describes the tasks required to install the 3990 under MVS.
- Chapter 9, "3990 Model 3 Subsystem Performance and Status Monitoring in an MVS Environment" on page 123, describes the tasks and functions involved in monitoring the 3990 Model 3 subsystem performance and status in an MVS environment.

- Chapter 10, "Using Dual Copy, DASD Fast Write, and Cache Fast Write in MVS Environments" on page 135, describes how to use the 3990 Model 3 extended functions in MVS environments.
- Chapter 11, "IDCAMS Reference—MVS Support for 3990 Basic Operations" on page 143, describes the IDCAMS commands for 3990 basic operations, including JCL examples and command parameters to show how to use the IDCAMS commands in MVS environments.
- Chapter 12, "Installation and Storage Administration Under VM" on page 161, describes the tasks required to install the 3990 under VM. Also described are the tasks and functions involved in storage administration with the 3990 operating in a VM environment.
- Chapter 13, "Installation and Storage Administration Under VSE" on page 177, describes the tasks required to install the 3990 under VSE. Also described are the tasks and functions involved in storage administration with the 3990 operating in a VSE environment.
- Appendix A, "Using the Operator Panel" on page 181, describes 3990 operator tasks such as switching power on and off, enabling or disabling channel interfaces, and restarting a storage path.
- Appendix B, "3990 Configuration Planning Worksheets" on page 189, provides worksheets to plan each physical configuration of the subsystem. These worksheets provide space for diagramming the subsystem configuration that you will specify in the vital product data.
- Appendix C, "3990 Vital Product Data Worksheets" on page 215, provides worksheets on which you specify the vital product data for the service representative who keys the data into the 3990 during installation.
- Appendix D, "Messages and Codes" on page 235, describes MVS, VM, and VSE messages pertaining to the 3990 and batch messages that are generated by the error recovery procedures (ERPs) and other components.
- Appendix E, "Installation Planning Representative 3990 Configuration and Cable Planning Worksheets" on page 249, provides worksheets for the Installation Planning Representative (IPR) to record the physical configuration of the subsystem. These worksheets provide space for diagramming the subsystem configuration that you specify in the vital product data. The worksheets also include cabling diagrams to record channel interface and control interface cable information.
- "Acronym List" on page 295, lists the acronyms used in the Storage Subsystem Library.
- "Glossary" on page 297, lists the terms used in the Storage Subsystem Library.
- "Bibliography" on page 309, lists books that have additional information on the various subjects discussed in this book.

Terminology

A comprehensive glossary is provided at the back of this book. This glossary contains terms used not only in this book but also in other DASD and storage control books in the Storage Subsystem Library.

Before reading further, be sure you understand the way the following terms are used within this book:

3380, unless otherwise indicated, refers to all models of the IBM 3380 Direct Access Storage except Model CJ2.

Cache fast write refers to a form of fast write where the data is written directly to cache storage without using nonvolatile storage and is available for later destaging. This 3990 Model 3 Storage Control function should be used for temporary data, or data that is readily recreated, such as the sort work files created by DFSORT.

Controller refers to the part of the 3380 A-unit that controls the transfer of data between the devices and the storage control.

DASD fast write refers to a form of fast write to cache storage where the data is written concurrently to cache storage and nonvolatile storage and is automatically scheduled for destaging to the DASD. Both copies are retained in the 3990 Model 3 until the data is completely written to the DASD, providing data integrity equivalent to writing directly to the DASD.

Dual copy refers to a high availability function made possible by the nonvolatile storage in a 3990 Model 3 and the Extended Function programming support. Dual copy maintains two logically identical copies of designated DASD volumes in a logical DASD subsystem, and automatically updates both copies every time a write operation is issued to the duplex pair (dual copy logical volume). DASD fast write can be active with dual copy, resulting in the performance-enhancing **fast dual copy**.

Device refers to a uniquely addressable part of the 3380 unit that consists of a set of access arms, the associated disk surfaces, and the electronic circuitry needed to locate, read, and write data.

Fast write refers to a class of 3990 Model 3 Storage Control write operations, performed at cache speed, that do not require immediate transfer of data to a DASD. Fast write operations reduce the time an application must wait for the I/O operation to complete. Fast write operations include: DASD fast write, cache fast write, and fast dual copy.

Storage control refers to the hardware unit that handles interactions between the processor channel and the controller.

Volume refers to the storage space that is accessible through a specific device address.

Storage Subsystem Library

The Storage Subsystem Library describes characteristics, capabilities, and features of the hardware, and it provides instructions for installing, using, and maintaining storage subsystem components effectively in the various operating environments. It is designed to provide both hardware and software related information for both direct access storage devices and storage controls.

The Storage Control subset of the Storage Subsystem Library contains the following books:

- *IBM 3990 Storage Control Introduction*, GA32-0098

  Provides a complete description of the various models of the 3990 Storage Control, including its data availability, performance, and reliability improvements over previous storage controls. In addition, it provides descriptions of the different configuration possibilities, optional features, performance characteristics, and software support of the 3990 Storage Control.

- *IBM 3990 Storage Control Planning, Installation, and Storage Administration Guide*, GA32-0100

  Provides a functional description of the IBM 3990 Storage Control. It describes the planning, program installation, and storage management tasks used in typical environments. Configuration examples as well as sample programs for controlling the various functions of the 3990 Storage Control are provided.

- *IBM 3990 Storage Control Reference*, GA32-0099

  Provides descriptions and reference information for the 3990 Storage Control. Descriptions include channel commands, error recovery, and sense information.

- *Cache Device Administration*, GC350101

  Specifies the access method services tools for administering a cache device under MVS. This book supports storage controls: 3990 Model 3, 3880 Model 23, 3880 Model 21, 3880 Model 13, and 3880 Model 11.

The DASD subset of the Storage Subsystem Library contains the following books:

- *IBM 3380 Direct Access Storage Introduction*, GC26-4491

  Provides a complete description of the various models of the 3380, including characteristics, features, and capabilities. In addition, the configuration and attachment options are described along with other information that helps in designing a storage subsystem to meet your needs. This book does *not* cover 3380 Model CJ2.

- *IBM 3380 Direct Access Storage Direct Channel Attach Model CJ2 Introduction and Reference*, GC26-4497

  Provides a complete description of the 3380 direct channel attach model CJ2 characteristics, features, capabilities, and string configuration options.

- *Using the IBM 3380 Direct Access Storage in an MVS Environment*, GC26-4492

  Provides specific guidance for using the 3380 in MVS operating environments. The book provides detailed instructions for planning the addition of new 3380 devices from a logical and physical point of view, installing devices, moving data to new devices, and performing some ongoing activities to maintain a reliable storage subsystem.

- *Using the IBM 3380 Direct Access Storage in a VM Environment*, GC26-4493

  Provides specific guidance for using the 3380 in a VM/SP, VM/SP HPO, or VM/XA operating environment. The book provides detailed instructions for planning the addition of new 3380 devices, installing new devices, moving data to new devices, and performing ongoing storage management activities to maintain reliable performance and availability. In addition, hardware considerations related to guest systems are addressed.

- *Using the IBM 3380 Direct Access Storage in a VSE Environment*, GC26-4494

  Provides specific guidance for using the 3380 in a VSE operating environment. The book provides instruction for planning the addition of new 3380 devices, installing devices, moving data to new devices, and performing ongoing storage subsystem management.

- *Maintaining IBM Storage Subsystem Media*, GC26-4495

  Describes how the storage subsystem and the various operating systems handle disk storage errors, and provides instruction on using the Environmental Record Editing and Printing (EREP) Program and the Device Support Facilities (ICKDSF) to diagnose and correct disk media errors. Recovery procedures are provided for the various device types. In addition, background material on DASD storage concepts is included.

- *IBM 3380 Direct Access Storage Reference Summary*, GX26-1678

  Provides a summary of 3380 capacity, performance, and operating characteristics.

- *Storage Subsystem Library Master Index*, GC26-4496

  Provides a central source for information related to storage subsystem topics. Books for IBM 3380 Direct Access Storage, 3380 Direct Channel Attach Model CJ2, and 3990 Storage Controls are indexed in this publication. An overview of the material in the Storage Subsystem Library is provided with this index.

Figure 1 on page 6 shows the relationships among the Storage Subsystem Library books in terms of high-level tasks described in each book.

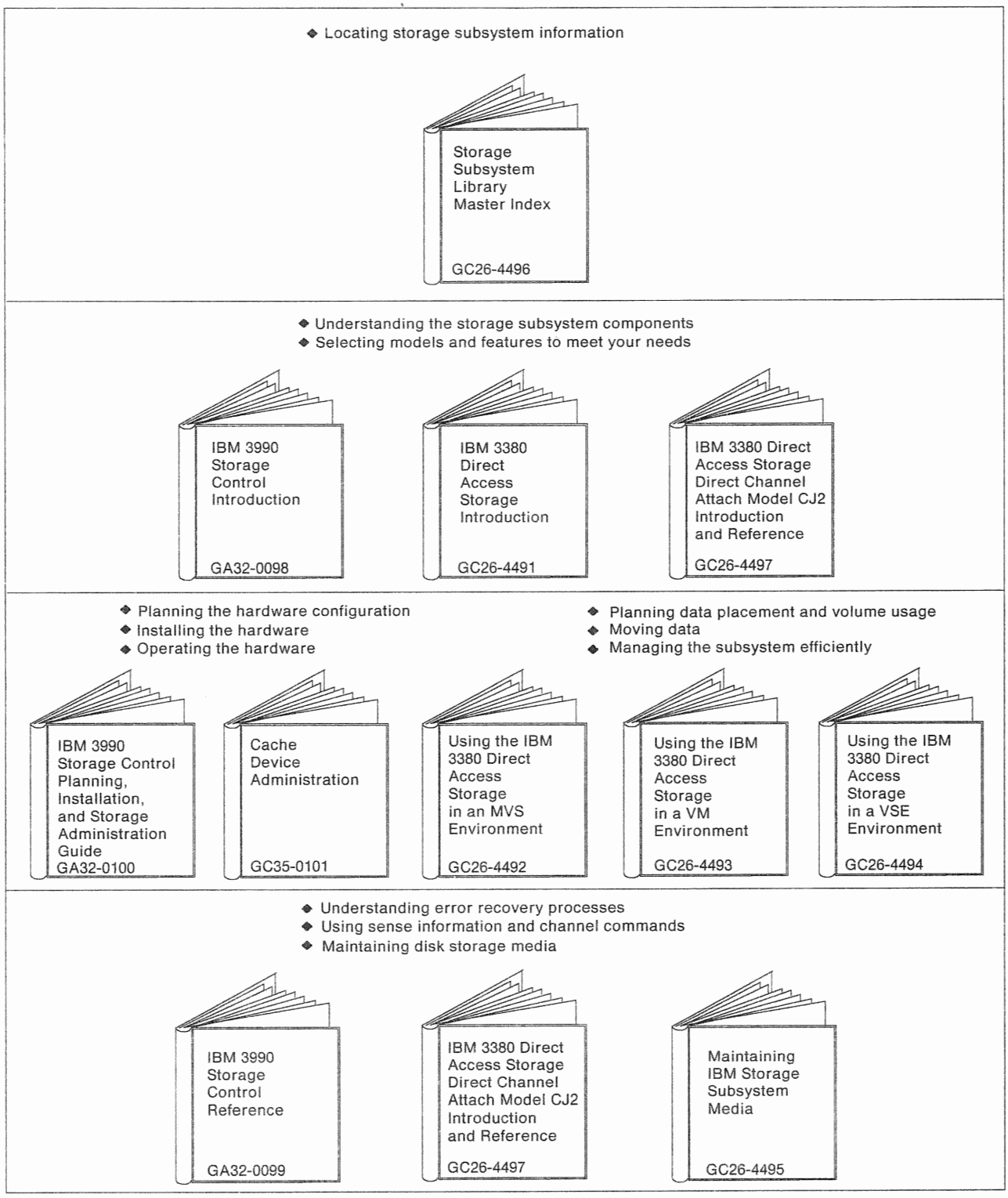

Figure 1. Storage Subsystem Library

SSL Ordering Information

You can obtain a copy of **every book** in the SSL using one general bill of forms (GBOF) number, **GBOF-1762**. Select one of the following GBOF numbers to obtain subsets of the SSL that provide information for specific environments and equipment. To obtain an individual book, use its order number.

Title	GBOF-1756	GBOF-1757	GBOF-1758	GBOF-1759	GBOF-1760	GBOF-1761	GBOF-0366
IBM 3380 Direct Access Storage Introduction, GC26-4491	X	X	X				
IBM 3380 Direct Access Storage Direct Channel Attach Model CJ2 Introduction and Reference, GC26-4497				X	X	X	
Using the IBM 3380 Direct Access Storage in an MVS Environment, GC26-4492	X			X			
Using the IBM 3380 Direct Access Storage in a VM Environment, GC26-4493		X			X		
Using the IBM 3380 Direct Access Storage in a VSE Environment, GC26-4494			X			X	
Maintaining IBM Storage Subsystem Media,* GC26-4495	X	X	X	X	X	X	
IBM 3380 Direct Access Storage Reference Summary, GX26-1678	X	X	X	X	X	X	
IBM 3990 Storage Control Introduction, GA32-0098							X
IBM 3990 Storage Control Planning, Installation, and Storage Administration Guide, GA32-0100							X
IBM 3990 Storage Control Reference, GA32-0099							X
Cache Device Administration, GC35-0101	X						X
Storage Subsystem Library Master Index, GC26-4496	X	X	X	X	X	X	X
Binder + 3380 inserts, GX26-3767	X	X	X	X	X	X	
Binder + 3990 inserts, GX26-3768							X

* *Device Support Facilities: Primer for the User of IBM 3380 Direct Access Storage*, GC26-4498, is distributed with this book.

SSL Binder Information

Binder kits for the SSL are available to help organize your library. Kits consist of a binder with identifying cover and spine inserts for either 3380 or 3990 subsets of the SSL, and are included when you order the following GBOF numbers:

- GBOF-1756 through -1761 includes a binder with 3380 inserts.
- GBOF-0366 includes a binder with 3990 inserts.
- GBOF-1762 includes binders and inserts for both 3380 and 3990.

SSL binder kits may also be ordered separately.

- Order number GX26-3767 contains a binder and 3380 inserts.
- Order number GX26-3768 contains a binder and 3990 inserts.

Related Publications

The following publications (that are not part of the Storage Subsystem Library) describe the various IBM 3880 Storage Control models to which the 3380 device can attach:

- *IBM 3880 Storage Control Models 1, 2, 3, and 4 Description*, GA26-1661
- *IBM 3880 Storage Control Model 13 Description*, GA32-0067
- *Introduction to IBM 3880 Storage Control Model 23*, GA32-0082
- *IBM 3880 Storage Control Model 23 Description*, GA32-0083.

Device Support Facilities: Primer for the User of IBM 3380 Direct Access Storage, GC26-4498, is a publication that is intended for use with 3380 books in the Storage Subsystem Library.

Cache RMF Reporter Program Description/Operation, SH20-6295, provides detailed information on the Cache RMF Reporter.

A bibliography of other publications that are referred to in this book and may provide additional related information is included at the back of this book. To help you assess the potential usefulness of each reference, the bibliography includes a short description of the relevant contents of each publication.

Chapter 1. 3990 Overview

This chapter is an **overview** of the IBM 3990 family of storage controls. Today's businesses expect exceptional performance from their storage subsystems. The 3990 family of storage controls is designed to meet and exceed the data availability, performance, and reliability requirements that businesses demand.

The 3990 Storage Control is available in a full range of configurations and models:

- **3990 Model 1**, designed for mid-range systems with a requirement for two DASD paths.
- **3990 Model 2**, designed for intermediate-to-large systems requiring more than two DASD paths.
- **3990 Model 3**, also designed for intermediate-to-large systems requiring more than two DASD paths *and* also offering four cache sizes from 32 to 256 megabytes and 4 megabytes of nonvolatile storage (NVS).

Figure 2 shows a 3990 Model 3 Storage Control with the 4-path 3380 Models AJ4/BJ4 and AK4/BK4.

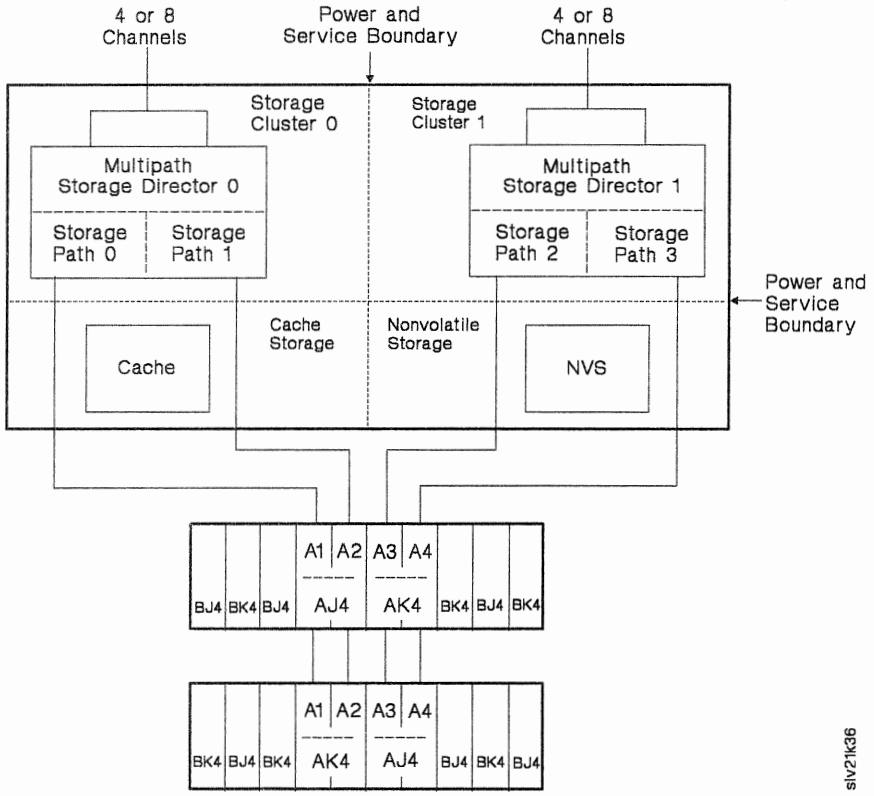

Figure 2. 3990 Model 3 Storage Control with 4-Path 3380 Models AJ4/BJ4 and AK4/BK4

3990 Standards of Data Availability and Performance

All 3990 models address data availability and performance requirements by using:

- Internal processing that is faster than that in previous IBM Storage Controls, reducing the time it takes to move data.
- Faster access to data on the DASD is achieved because control information that formerly was kept in the DASD A-unit is now kept in the 3990's shared control array.

In addition, the 3990 Models 2 and 3 provide:

- Four storage paths between the 3990 Storage Control and the DASD; twice as many paths as available with the 3880 Models 3 or 23.
- Four independent I/O operations can be active concurrently within the same 4-path string when attached to the IBM 3380 Models AJ4 or AK4.
- Two independent storage clusters per frame provide separate power and service regions.

In addition to those improvements given above, the 3990 Model 3 provides:

- Larger cache sizes that result in finding the requested data in cache more often, thus reducing subsystem response time.
- Up to a 4.5 megabytes per second cache data transfer rate.
- Use of IBM's one million bit chip for cache storage.
- Improved cache slot segmentation resulting in more efficient cache space utilization.
- Improved internal cache algorithms resulting in greater efficiency.
- Two fast write capabilities, **DASD fast write** and **cache fast write**, each allowing cache speed write operations.
- A **dual copy** capability that increases the availability and accessibility of data. The dual copy capability writes all selected data to two different devices, independent of host processing. Immediate access to the information is automatically available on the secondary device if access to the primary device is not possible.

  The **DASD fast write** and the **dual copy** capabilities can be combined resulting in a performance enhancing **fast dual copy**.
- Dual data transfer and branching data transfers between the 3990 and the channel and the 3990 and the device.
- Separate power and service regions for cache and nonvolatile storage.

3990 Standards of Reliability, Availability, and Serviceability

All models of the 3990 family address reliability, availability, and serviceability requirements by using component and design enhancements including:

- Each storage cluster, within its own power and service region, contains a separate microprocessor-controlled support facility. These independent support facilities provide effective availability and serviceability functions.

- Service information messages (SIMs) for improved problem determination and failure, and service impact assessments.
- Internal design enhancements and reliable components to assure a high level of reliable hardware and efficient operation.
- Improved fault isolation for more efficient problem determination.
- Vital product data storage for subsystem configuration information.

In addition, the 3990 Models 2 and 3 provide:

- A *nondisruptive DASD installation* capability that allows additional BJ4 or BK4 units to be installed in a 4-path string or a second 4-path DASD string to be installed in a 3990 subsystem without disrupting host access to the existing DASD, assuming the prerequisite address and subsystem definitions have been specified.
- Two independent storage clusters per frame providing separate power and service regions.
- Better reliability, availability, and serviceability characteristics than similarly configured 3880s.

In addition to those improvements given above, the 3990 Model 3 provides:

- A 4 megabyte nonvolatile storage (NVS) that supports both the DASD fast write and the dual copy capabilities. The NVS uses a battery to protect data for up to 48 hours.
- In cache storage, all single- and double-bit errors are detected and corrected. All triple-bit errors are detected and most are corrected.

Note: For maximum data availability, all 3990 Model 3 subsystems using either dual copy or DASD fast write should be dual-frame configurations. A dual-frame configuration using the dual copy capability duplicates all common components that may prevent access to data — from the processor channel to the 3990 Model 3 to the DASD record.

The 3990 Storage Control answers the needs of both today and the future's data processing requirements. In all respects, the 3990 Storage Control extends the features and capabilities of the 3880 Storage Controls. Each model of the 3990 Storage Control directly addresses the data availability, performance, and reliability issues of storage management. Even greater performance is available from those 3990 models with cache and the nonvolatile storage.

3990 Performance Features

The 3990 provides a number of performance features. The features described below are significant performance improvements over the previous family of IBM Storage Controls.

Faster and More Efficient Microprocessing

All the 3990 Storage Controls use faster internal processing techniques than previously available and more efficient microprocessing that permits faster data access.

Four Storage Paths

3990 standards of data availability and overall performance include twice as many storage paths in the 3990 Models 2 or 3 than in the 3880 Model 3 or 23 Storage Controls. When attached to 4-path 3380 Models AJ4/AK4, the 3990 can operate in the high performance and high data availability mode: Device Level Selection Enhanced (DLSE).

When the 3990 Model 2 or 3 is attached to 4-path 3380 Models AJ4/AK4, the accessibility of data is even greater than the accessibility of data when attached to 3380 AD4/AE4 devices operating in Device Level Selection (DLS) mode. Attaching to 3380 AJ4/AK4 devices allows the 3990 to operate in DLSE mode, providing twice as many paths to each device.

With the Device Level Selection Enhanced (DLSE) mode of data transfer, simultaneous data transfer is possible over all four storage paths within the same 4-path string. A DLSE storage subsystem, even with one of its four paths disabled, performs better than two DLS subsystems with all four paths available. The performance of three paths of a DLSE subsystem is approximately the same as the performance of two DLS subsystems (with two paths each).

Figure 3 shows the data transfer capabilities of both the DLS subsystem and the DLSE subsystem.

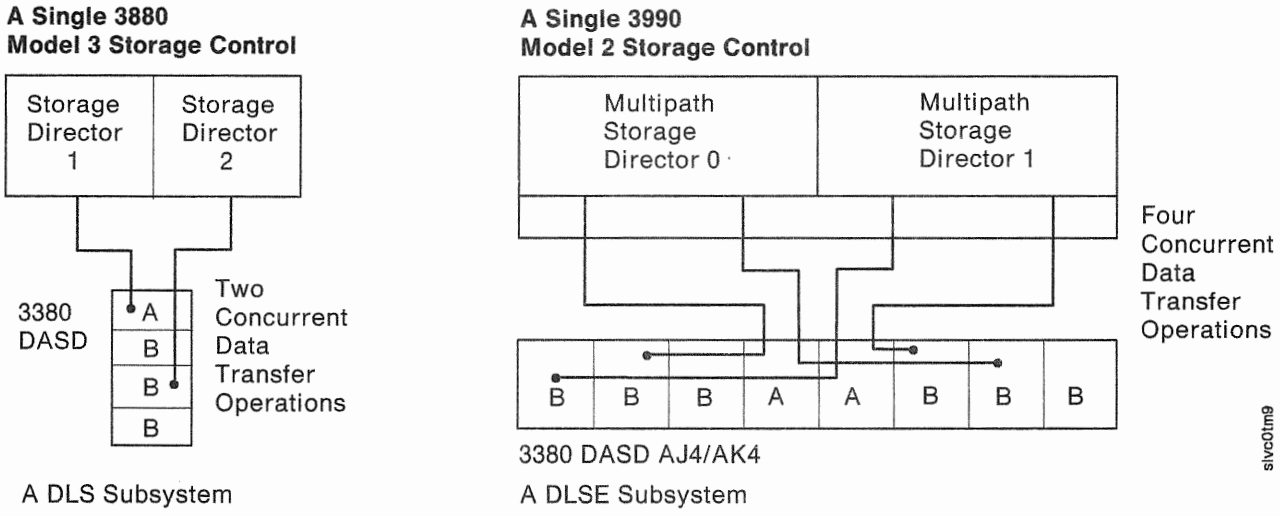

Figure 3. Examples of Data Transfer Capabilities of DLS and DLSE Subsystems

Cache (3990 Model 3 Only)

3990 Model 3 cache performance enhancements include:

- Cache sizes of 32, 64, 128, or 256 megabytes.
- Sequential cache management algorithms have been refined to provide faster cache access to sequential data.
- Cache is managed in 16K segments, providing more efficient use of the cache.
- Up to eight concurrent operations inside the cache provide more internal efficiency. This efficiency means less contention for components within the subsystem and a higher data throughput.

Fast Write Capabilities (3990 Model 3 Only)

Two significant performance benefits to 3990 Model 3 users are:

- **DASD fast write:**
  - Permits write operations to be performed at cache speeds
  - Provides data integrity equivalent to DASD writes
  - Eliminates the requirement to write the data to the DASD immediately
  - Frees the channel for other activities and additional operations
  - Maintains a copy of the data in the NVS until it is destaged (written from the cache to the DASD).
- **Cache fast write:**
  - Permits the selected write operations to be performed at cache speeds when immediate writes to DASD are not required. Cache fast write is recommended for small-to-intermediate-size sort work files.

DASD Fast Write and Cache Fast Write Advantages

Both fast write capabilities permit write operations to be performed at cache speed, eliminating the need to write data to the DASD immediately. These capabilities provide faster response times, particularly for DASD volumes with high write activity resulting in improved overall subsystem performance.

4.5 or 3.0 Megabytes Per Second Channel Speed

The 3990 Model 3 can transfer cache data at either 4.5 or 3.0 megabytes per second. The actions required to run the 3990 Model 3 at the 4.5 megabytes per second channel speed are: run the I/O Configuration Program (IOCP) specifying 4.5 megabytes per second as the channel speed and set the channel speed in the 3990.

On the same 3990 Model 3, some channel interfaces can operate at 4.5 megabytes per second while other channel interfaces can operate at 3.0 megabytes per second, depending on the processor type. The 3990 Model 3 storage controls operating at 4.5 megabytes per second must be installed ahead of any other control unit on that channel. The 3990 Storage Controls that operate only at 3.0 megabytes per second are not required to be installed ahead of all other storage controls, but it is recommended.

All 3990 Storage Controls must use the blue channel interface cables (cable group number 5460185). The blue channel interface cables have improved skew characteristics and are smaller in diameter than the gray channel interface cables. All storage controls that are installed ahead of a 3990 must also be installed with blue channel interface cables.

3990 Reliability, Availability, and Serviceability Features

The 3990 provides a number of reliability, availability, and serviceability features. Component and design enhancements improve the IBM 3990's reliability, availability, and serviceability (RAS) characteristics over those of the previous family of IBM Storage Controls.

Dual Copy

A major improvement in data reliability and availability is provided by **dual copy**. Available on the 3990 Model 3, dual copy provides a duplicate copy of a volume on a second device in the logical DASD subsystem. Dual copy is user-defined for a volume. For a dual copy volume, each time the primary device is updated, the 3990 Model 3 automatically updates the secondary device. The data transfer operations are automatically switched to the secondary device if a failure occurs on the primary device.

Dual copy provides important advantages:

- Protects a critical volume from a single device failure
- Writes the data to two separate devices
- Provides for near-continuous operations by providing a back-up copy if loss of access occurs to one of the dual copy devices
- Ensures that the second copy is identical to the primary copy.

The DASD fast write capability and the dual copy capability can be combined resulting in a **fast dual copy**. When the user specifies both DASD fast write and dual copy operations, the performance is approximately equal to that of normal cache operations.

Two Independent Storage Clusters

Single-frame 3990 Models 2 and 3 provide a *pair* of independent *storage clusters* (usually shortened to *clusters*). A clear benefit of each of the clusters is that they are independent components. Each cluster provides a separate power and service region and two separate paths to the DASD. Loss of power to one cluster does not disable the storage control because processing continues through the other storage cluster. A service representative can take one cluster for maintenance while cache and DASD access continues through the remaining cluster's two paths.

In the 3990 Model 3, cache storage and nonvolatile storage are shared by the storage paths, but are logically and physically separate from the storage clusters.

Support Facility

Each storage cluster has its own support facility. A major RAS enhancement, the support facility permits concurrent maintenance and provides a remote maintenance support capability. Among other tasks, the support facility monitors subsystem activity, generates the service information messages (SIMs), communicates with the other support facility (in 3990 Models 2 and 3), runs maintenance analysis procedures (MAPs) and diagnostics, and logs error conditions on diskette storage.

The concurrent maintenance and remote maintenance support capabilities of the support facility (in each independent storage cluster) in combination with the service information messages (SIMs) reduce problem determination time and effort, and the total maintenance time.

Vital Product Data (VPD) Storage

Each storage cluster contains a vital product data (VPD) storage module. The subsystem configuration information saved in VPD storage includes: 3990 features, the subsystem mode of operation, subsystem identifiers, subsystem configuration, control unit addresses for each channel, channel speed, and the number of addressable devices that can be attached to the logical DASD subsystem.

The installation defines the data to be saved in VPD by completing the appropriate "3990 Vital Product Data Worksheets" in Appendix C. The service representative keys the VPD into the 3990 during installation. The service representative can change the VPD at any time, but the changes are not activated until the next 3990 IML. The contents of VPD storage are duplicated on the writeable diskette for each storage cluster.

Concurrent Maintenance

The concurrent maintenance provided through the 3990 Models 2 and 3 support facility greatly improves the availability of DASD data. Because of the power and service boundaries built into the 3990, one storage cluster can continue to access cache and DASD while maintenance is taking place on the other storage cluster.

A service action can be performed on cache while direct access to DASD is provided through the storage clusters.

A service action can be performed on nonvolatile storage while caching operations and direct access to DASD continues through the storage clusters.

Remote Maintenance Support

The remote maintenance support capability permits a support representative in a remote field support center to establish communication with either storage cluster in a 3990 through an external modem. Once the communication link is established, the remote support representative can analyze the error data and send maintenance information to the service representative on site.

An access code, valid for a single session established within one hour, is required to authorize a remote connection. All remote maintenance support sessions are protected by a 3990-generated access code. Having the 3990 generate the access code ensures the integrity of the remote session and prevents unauthorized data links to the 3990.

Writeable Diskette

The diskette contains 3990 microcode, microcode patches, error log, a copy of the vital product data for that storage cluster, 3990 diagnostics, 3380 "inline" diagnostics, and the soft-copy maintenance analysis procedures (MAPs).

During either local or remote maintenance support activities, microcode patches can be transmitted to the 3990 support facility and stored on the 3990's diskette. Microcode patches written on the diskette are not lost across IMLs.

The installation controls when to implement microcode patches. Those patches written on the diskette are not implemented until the installation asks a local service representative to do so.

Service Information Messages (SIMs)

Service information message-format sense data (SIMs) and SIM alert messages provide a much improved method of notifying the user of any 3990 failure.

SIM Alert Messages

SIM alert messages inform operators of a hardware failure. The SIM alert messages are intended to cause the operator to initiate the action necessary for an installation to get a 3990 problem fixed.

SIM Messages

The SIM message identifies the impact of the failure, and the effect of the repair action through an Environmental Record Editing and Printing (EREP) detail edit report. The installation can use this information to schedule the repair action, based on the severity of the failure, and the resource required to repair it. These messages provide information about the failure so that the service representative can bring the most likely repair parts, significantly reducing repair time and the possibility of return calls. (For more information on SIMs, see Chapter 5, "Reliability, Availability, and Serviceability" on page 67.)

Because of the service information message and the SIM alert message, any 3990 failure can, in most cases, be fixed quickly through replacement parts identified by the SIM message. Also, the installation can make a more informed decision about scheduling any repair action.

Ease of Migration

All 3990 features (including Four Channel Switch, Additional) are field-installable. Any 3990 model can be field-upgraded to a higher model number and larger cache size increments can be added to a 3990 Model 3. (See "3990 Features" on page 32 for information on the features available on a 3990 Storage Control.)

Nondisruptive DASD Installation Capability

Businesses with expanding DASD configurations will appreciate the nondisruptive installation capability of the 3380 Models AJ4/AK4 attached to 3990 Storage Controls. When adding 3380 Models AJ4/BJ4 and AK4/BK4 as 4-path strings to an installed 3990 DLSE subsystem with at least one 4-path 3380 Model AJ4 or AK4 pair installed, the additional devices can be installed and brought online:

- Without disrupting any application
- Without removing power from the 3990
- Without stopping the operating system
- Without taking any channel path offline.

When 4-path 3380 Models AJ4 and/or AK4 are attached to a 3990 Model 2 or 3, it is possible to add BJ4s or BK4s to the string without disrupting operation and availability of existing devices on the string. Similarly, a second 4-path 3380 Model AJ4 or AK4 string can be attached to the 3990 Storage Control without disrupting the operation and availability of an existing 4-path string. During this nondisruptive DASD installation process, only one of the four paths to the DASD string is offline to the subsystem at any given time. An intermix of DLSE and DLS subsystems does not allow nondisruptive installation.

Note: To take advantage of the nondisruptive DASD installation capability, the devices planned for future installation must have assigned addresses that are predefined to the operating system, the storage control, and the processor channel subsystem in 3090, 308X, and 4381 environments.

See "DLSE Mode—Nondisruptive Installation of a 4-Path DASD String or a B-Unit" on page 105 for a description of the procedures for nondisruptive installation.

Intermixed Strings of DASD

Strings of 3380 Models AJ4 or AK4 (2- or 4-path capability) can be intermixed with strings of 3380 AA4, AD4, or AE4 (2-path capability) to form a single DASD storage subsystem. However, it is not possible to intermix 2-path and 4-path 3380 AJ4 or AK4 strings in the same subsystem. An intermix of DLSE and DLS subsystems does not allow nondisruptive installation.

Environmental Features

Improved technology and packaging reduce the power, cooling, and floor loading requirements for a 3990 Storage Control from those required for the 3880 Storage Control on a per path basis comparison.

For information on power, cooling, and floor loading requirements, see *IBM System/360, System/370, and 4300 Processors Input/Output Equipment Installation Manual—Physical Planning*.

Also, because four paths to DASD are built into each single-frame 3990 Model 2 or 3, twice as many paths to DASD are provided over the number of paths available in the previous family of storage controls. For example, *one 3990 Model 2* provides the same number of paths (four) to the DASD as there are in *two 3880 Model 3s or 23s*. The 3990 Model 2 or 3 provides four paths to DASD in the same floor space as two paths from a 3880 to DASD.

Because side clearance is not required for the 3990 Models 1 and 2, the total required floor space is reduced by more than half. Side clearance may be required for the 3990 Model 3, but it is less than that required for the 3880 Model 23.

Twice as many device actuators can be attached to the 3990 Model 2 or 3 as can be attached to the 3880 Model 3 or 23.

Chapter 2. Introducing the 3990 Family of Storage Controls

The IBM 3990 models are a family of storage controls that provide improved performance, function, and reliability over previous storage controls. Each model can attach the 3380 Enhanced Subsystem Models AJ4/BJ4 and AK4/BK4 and existing 3380 Direct Access Storage Device (DASD) Models AA4/B04, AD4/BD4, and AE4/BE4.

The 3990 is available in three models: Models 1 and 2 (without cache) and Model 3 (with cache and nonvolatile storage). 3990 Models 1 and 2 are supported by MVS/ESA, MVS/XA, MVS/370, VM/XA SP, VM/XA SF, VM/SP, VM/SP HPO, and VSE/SP. The 3990 Model 3 basic and extended caching functions are supported by MVS/ESA and MVS/XA. The 3990 Model 3 basic caching functions are supported by MVS/370 and VM/SP HPO. Figure 4 shows a 3990 Model 2 in DLSE mode attached to 4-path DASD strings.

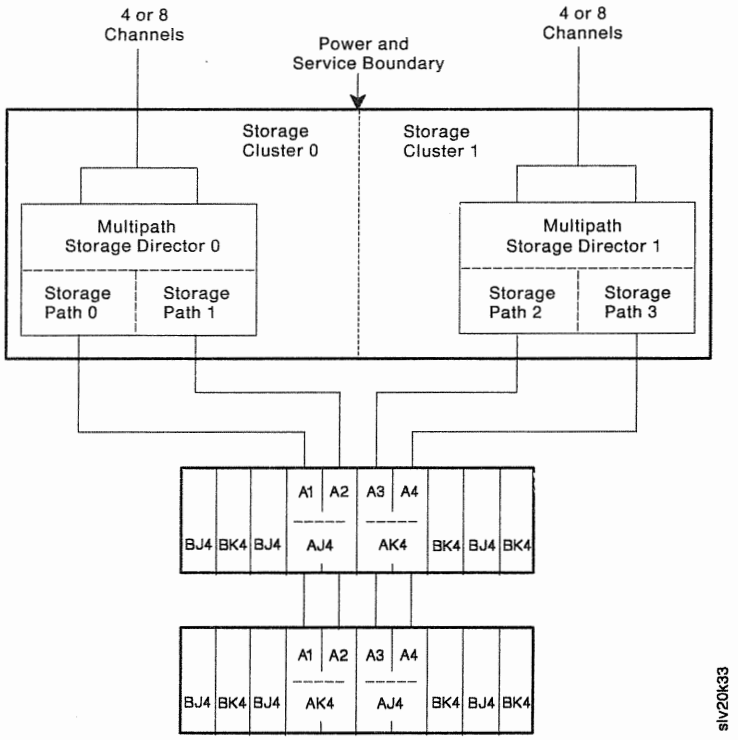

Figure 4. 3990 Model 2 in DLSE Mode Attached to 4-Path DASD Strings

Introducing 3990 Terms and Concepts

The 3990 introduces:

- 3990 Hardware components
- Two operating modes (DLSE support mode and DLS support mode)
- Two storage director capabilities (multipath and single-path storage directors)
- Two fast write capabilities for the 3990 Model 3
- A dual copy capability to enhance 3990 Model 3 high data availability characteristics.

The 3380 J and K models introduce 4-path DASD operating capabilities. For migration to 4-path operation, these models also offer 2-path DASD operating capabilities.

To aid in understanding the 3990 models and features and DASD capabilities, familiarize yourself with the following summaries of the new terms and concepts.

3990 Hardware Components

The 3990 introduces the following hardware components:

Separate power and service regions improve data availability and serviceability for the major 3990 components. Each storage cluster, the cache storage, and the nonvolatile storage operate in separate power and service regions.

A storage cluster contains channel and DASD controls, two storage paths, a shared control array, and a support facility. The 3990 Model 1 has one storage cluster; the 3990 Model 2 and 3 each have two. Storage cluster is usually shortened to *"cluster."*

In the 3990 Model 3, cache storage and nonvolatile storage are shared by the storage paths, but are logically and physically separate from the storage clusters.

A storage path controls data transfer operations between a channel and DASD or cache. Data is transferred between channel and cache, channel and DASD, and cache and DASD, through the storage paths.

The shared control array (SCA) contains status information about cache storage, storage paths, and devices in a storage cluster. This information was formerly kept in the dynamic path selection (DPS) array of the DASD controller. The shared control array allows the storage director to access the DPS status information faster because it is already in the storage control.

In two-cluster 3990 models, the shared control arrays are logically divided. One half contains information about the storage paths and the devices in its own cluster, and the other half contains the same type of information about the other cluster. Sharing information in this way ensures that the DPS status information is accessible through a second path if a failure occurs in the first path.

Because the SCA contains subsystem status information, you cannot cross-connect DASD strings between two single-frame 3990s or between a 3990 in single-frame or dual-frame configuration and another storage control.

Regardless of whether the DASDs are configured as 2-path or 4-path strings, having the SCA in the 3990 ensures data access through at least one other path.

A support facility is a service processor in each cluster that provides diskette error logging on a writeable diskette, improved failure notification through the service information message (SIM) format sense data format, power control and monitoring, remote support capability, and soft copy maintenance analysis procedure (MAP) capability for its storage cluster.

A nonvolatile storage (NVS) is an additional 4 megabyte storage with up to 48-hour battery backup power (assuming a fully-charged battery) to protect its data from utility power outages. Nonvolatile storage and its associated programming support significantly enhance write operation performance and data availability through the DASD fast write and dual copy capabilities. Nonvolatile storage is standard on all 3990 Model 3s.

The battery backup is maintained at a fully charged capacity as long as utility power is supplied to the 3990 Model 3. When utility power is interrupted, a fully-charged battery protects the data stored in the NVS for up to 48 hours.

Two Subsystem Operating Modes (DLSE and DLS Support Modes)

The 3990 introduces two subsystem operating modes for the 3990 Model 2 and 3. The 3990 Model 1 operates in DLS support mode.

DLSE support mode permits the 3990 to attach the 4-path 3380 J and K models through two multipath storage directors (each providing two paths to DASD). DLSE support mode is usually shortened to "DLSE mode." In DLSE mode, each multipath storage director contains both the storage paths in the cluster.

In DLSE mode, a logical DASD subsystem consists of two multipath storage directors and the 4-path DASD strings (or the intermixed 2-path and 4-path strings) attached to the multipath storage directors. Thus, all the DASD strings attached to the 3990 are included in one logical DASD subsystem. Up to 32 4-path devices per string (64 device addresses per subsystem) can attach to the 3990 Model 2 or 3. Figure 4 on page 19 shows how 4-path DASD strings attach to the 3990.

In DLSE mode, you can intermix 2-path strings of 3380 A, D, and E models with a 4-path string of 3380 J and K models. However, within a subsystem you cannot intermix strings of 2-path 3380 J and K models with a string of 4-path 3380 J and K models. Figure 10 on page 31 shows how 2-path DASD strings can be intermixed with a 4-path DASD string.

DLS support mode permits the 3990 to attach 2-path 3380 models through two pairs of single-path storage directors. DLS support mode is usually shortened to "DLS mode." 3990 Models 2 and 3 operation in DLS mode is similar to a pair of 3880s in a dual-frame configuration. The 2-path DASD strings are cross-connected to one single-path storage director in each storage cluster. If a cluster or path fails, DASD operations can continue through the single-path storage director in the other cluster.

In DLS mode, a logical DASD subsystem consists of two single-path storage directors and the 2-path DASD strings attached to those storage directors. A maximum of 32 devices can attach to each DLS subsystem. For 3990 Model 2 and 3, storage directors 0 and 2 and their attached 2-path DASD strings comprise one DLS subsystem; storage directors 1 and 3 and their attached 2-path DASD strings

comprise the other DLS subsystem. A maximum of 64 devices can attach to the 3990 Model 2 or 3. Figure 9 on page 29 shows how 2-path DASD strings attach to the 3990 Model 2 or 3.

A 3990 Model 1 attaches the 2-path DASD in one logical DASD subsystem. In the 3990 Model 1, both single-path storage directors are in one storage cluster. The 3990 Model 1 can attach a maximum of 32 devices. Figure 5 on page 23 shows how 2-path DASD strings attach to the 3990 Model 1.

Two Storage Director Capabilities (Multipath and Single-Path)

The 3990 introduces two storage director capabilities for the 3990 Model 2 and 3. The 3990 Model 1 storage directors are single-path storage directors.

A multipath storage director is a logical entity that contains two storage paths in the same storage cluster. Used in DLSE mode to attach 4-path DASD strings or 2-path strings intermixed with a 4-path DASD string, multipath storage directors allocate storage paths for data transfer operations independent of host programming. Each multipath storage director has a unique control unit address on each channel to which it is attached. Figure 4 on page 19 shows how multipath storage directors attach 4-path DASD strings.

A single-path storage director is a logical entity that contains one of the storage paths in a storage cluster. Used in DLS mode to attach 2-path DASD strings, single-path storage directors are equivalent to 3880 storage directors. Each single-path storage director has a unique control unit address on each channel to which it is attached. Figure 5 on page 23 shows how single path storage directors attach 2-path DASD strings on a 3990 Model 1. Figure 9 on page 29 shows how single path storage directors attach 2-path DASD strings on a 3990 Model 2 or 3.

Two DASD Capabilities (2-Path and 4-Path)

The 3380 Models AJ4 and AK4 provide either 2-path or 4-path capability through two features (2-Path String Attachment and 4-Path String Attachment). All 3380 Models AA4, AD4, and AE4 provide 2-path capability.

4-path DASD capability is available on the 3380 Models AJ4 and AK4 through the 4-Path String Attachment feature. The 4-path capability permits concurrent data transfer with **any four** devices within a string, including those of the same head and disk assembly (HDA). The 3380 J and K models with the 4-Path String Attachment feature can only attach to the 3990 Model 2 and 3 in DLSE mode.

2-path DASD capability is available on the 3380 Models AJ4 and AK4 through the 2-Path String Attachment feature, and is standard on 3380 Models AA4, AD4, and AE4. It permits concurrent data transfer from two devices within a string, including those of the same HDA for 3380 Models AD4 and AE4.

Logical DASD Subsystem

A logical DASD subsystem consists of two storage directors attaching one or two DASD strings.

In DLSE mode, a logical DASD subsystem is a pair of multipath storage directors and the attached 4-path DASD strings, providing a total of four storage paths to the DASD strings. Each DLSE subsystem can attach up to 64 devices.

In DLSE mode, the logical DASD subsystem can include 2-path DASD strings intermixed with a 4-path DASD string, providing a total of four paths to the 4-path DASD string and two paths to each 2-path DASD string.

In DLS mode, a logical DASD subsystem includes a pair of single-path storage directors and the attached 2-path DASD strings, providing a total of two storage paths to each DASD string. Each logical DASD subsystem can have up to 32 devices.

3990 Model 1

The 3990 Model 1 operates in DLS mode and attaches 2-path 3380 strings in a single DLS subsystem. The 3990 Model 1 provides DASD attachment capability for small and intermediate systems that do not require cache storage.

The major components of a 3990 Model 1 are shown in Figure 5.

The 3990 Model 1 has one storage cluster with two storage paths to DASD and one support facility. Each storage path is a storage director; each storage director provides one host-addressable path to DASD.

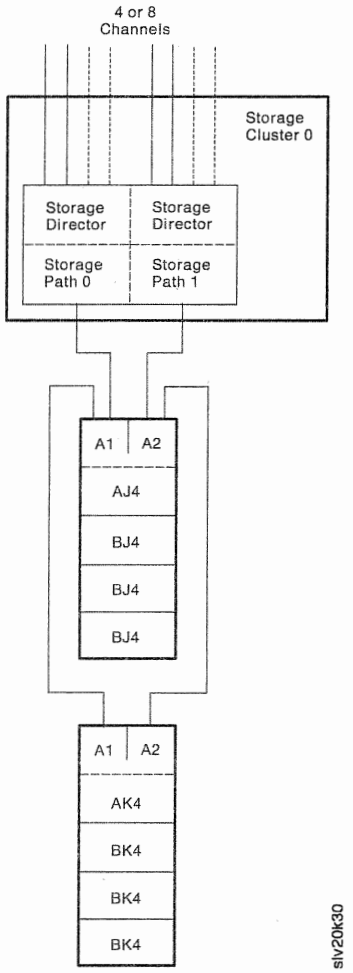

Figure 5. 3990 Model 1 in DLS Mode Attached to 2-Path DASD Strings

The single storage cluster attaches to four channels. In Figure 5, dotted lines show the four channels added with the Four Channel Switch, Additional feature permitting the cluster to attach to a total of eight channels.

Note: On a 3990 Model 1, each channel can attach to one and only one storage director.

We recommend that you define the channel attachment with two or four channels to each storage director. However, you can specify that any number of channels are to be attached to either storage director. See Figure 15 on page 36 and Figure 18 on page 39 for examples, and "Assigning Channels to 3990 Model 1 Storage Directors" on page 222 for information on how to define 3990 Model 1 channel attachment in the vital product data.

Upgrading a 3990 Model 1 to a 3990 Model 2 or 3

The 3990 Model 1 can be upgraded to a 3990 Model 2 or 3. Upgrades are field-installable. Upgrading the 3990 Model 1 to a 3990 Model 2 provides:

- Improved availability
- DLSE support mode
- Capability to attach 4-path DASD strings
- Concurrent maintenance
- Dual-frame capability.

Upgrading the 3990 Model 1 to a 3990 Model 3 provides all the benefits of a 3990 Model 2 and:

- Cache storage with cache fast write capability
- Nonvolatile storage with DASD fast write and dual copy capability.

3990 Model 2

In a 3990 Model 2, there are two storage clusters; each with two storage paths to DASD. The two storage clusters each attach to four channels, for a total of eight channels attached to the 3990 Model 2. With the Four Channel Switch, Additional feature, each cluster attaches up to eight channels, for a total of 16. On the 3990 Model 2, each channel attached to a storage cluster is attached to both storage paths in that cluster.

The 3990 Model 2 can operate in either DLS or DLSE mode and can attach 2-path 3380 strings, or 4-path 3380 strings, or a mixture of both kinds of strings.

Figure 6 on page 25 shows the 3990 Model 2 in DLSE mode attached to 4-path DASD strings. The 3380 J and K models provide 4-path capability through the 4-Path String Attachment feature.

Figure 9 on page 29 shows a 3990 Model 3 in DLS mode attached to 2-path DASD strings (3990 Model 2 attachment is the same).

Figure 10 on page 31 shows a 3990 Model 2 in DLSE mode attached to 2-path DASD strings intermixed with a 4-path DASD string.

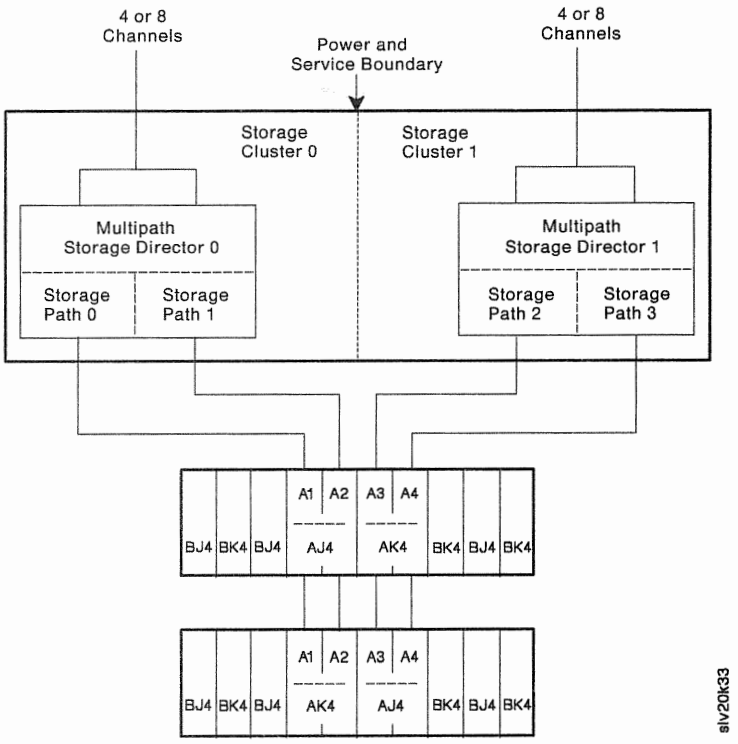

Figure 6. 3990 Model 2 in DLSE Mode Attached to 4-Path DASD Strings

Upgrading a 3990 Model 2 to a 3990 Model 3

Upgrading the 3990 Model 2 to a 3990 Model 3 provides:

- Cache storage with cache fast write capability
- Nonvolatile storage with DASD fast write and dual copy capability.

The upgrade is field-installable.

3990 Model 2 Dual-Frame Configuration Capability

In a dual-frame configuration, both frames must be the same model storage controls. Figure 7 shows the 3990 models that can be installed in a dual-frame configuration.

3990 Models That Can Be Installed in a Dual-Frame Configuration	3990 Model 1	3990 Model 2	3990 Model 3
3990 Model 1	—	—	—
3990 Model 2	—	Yes	—
3990 Model 3	—	—	Yes

Figure 7. 3990 Model Compatibility in Dual-Frame Configurations

3990 Model 3

The 3990 Model 3 has all the features of a 3990 Model 2 plus caching with the cache fast write function and nonvolatile storage with the DASD fast write and dual copy functions.

Like the 3990 Model 2, the 3990 Model 3 includes two storage clusters; each with two storage paths to DASD. The two storage clusters each attach to four channels, for a total of eight channels attached to the 3990 Model 3. With the Four Channel Switch, Additional feature, each cluster can attach up to eight channels, for a total of 16. Each channel attached to a storage cluster is attached to both storage paths in that cluster.

The 3990 Model 3 can operate in either DLSE or DLS mode and can attach 2-path and 4-path 3380 strings, separately or intermixed.

Figure 8 shows a 3990 Model 3 in DLSE mode attached to 4-path DASD strings. The 3380 J and K models provide 4-path capability through the 4-Path String Attachment feature.

Figure 9 on page 29 shows a 3990 Model 3 in DLS mode attached to 2-path DASD strings (3990 Model 2 attachment is the same).

Figure 10 on page 31 shows a 3990 Model 2 in DLSE mode attached to 2-path DASD strings intermixed with a 4-path DASD string (3990 Model 3 attachment is the same).

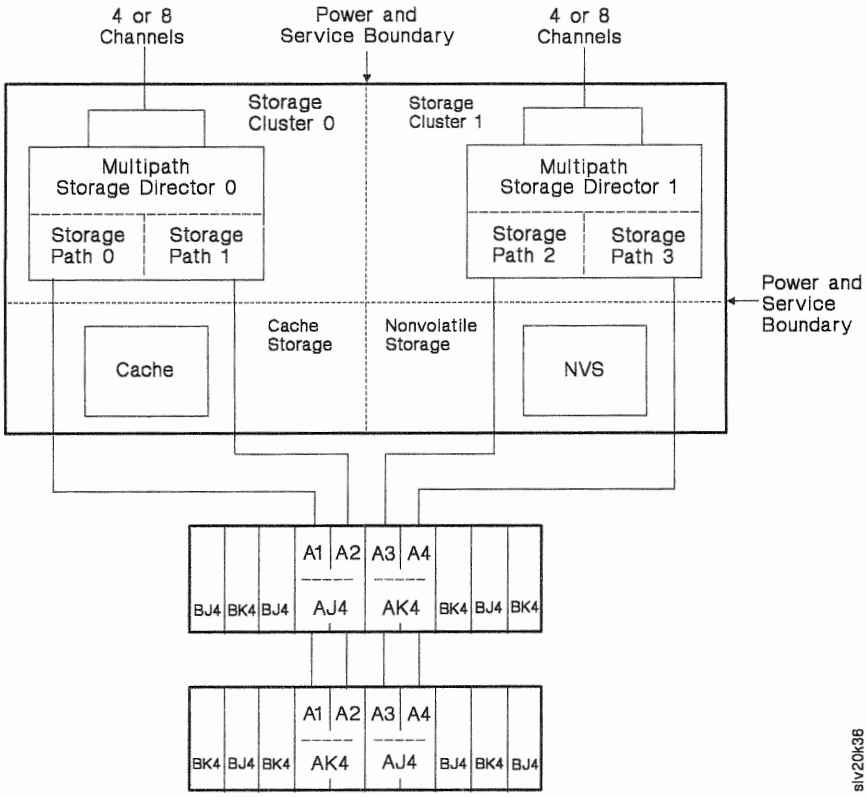

Figure 8. 3990 Model 3 in DLSE Mode Attached to 4-Path DASD Strings

The 3990 Model 3 has two additional components, **cache storage** and **nonvolatile storage**, which are shared by the two storage clusters. Cache and nonvolatile storage are electronic storage arrays.

The 3990 Model 3 cache storage and its programming support provide the **cache fast write** function for data that can be easily recreated and does not need to be written to DASD. See "3990 Model 3 Basic Cache Operations" on page 46 for a description.

The nonvolatile storage and its programming support provide the **DASD fast write** and **dual copy** functions. DASD fast write improves write hit performance and dual copy provides a significant data availability enhancement. See "3990 Model 3 Extended Function Subsystem Operations" on page 51 for descriptions.

Cache

Cache is a large electronic buffer with a 4.5 megabytes per second data transfer capability. It offers quick channel access for data that is currently in use and already stored on DASD or in nonvolatile storage and for cache fast write data that need not be retained.

In DLS mode, cache is logically divided in two equal parts by the storage control microcode; one part is allocated to each pair of single-path storage directors in a DLS subsystem. The storage space and the cache directory for each DLS subsystem is kept separate and is not shared with the other DLS subsystem. See Figure 9 on page 29 for an example.

In DLSE mode, cache is shared by all the storage paths in both multipath storage directors. See Figure 8 on page 26 for an example.

Cache is available in storage capacities from 32 to 256 megabytes. The model designation for each cache size is:

3990 Models	Megabytes of Cache
G03	32
J03	64
L03	128
Q03	256

Nonvolatile Storage (NVS)

Nonvolatile storage (NVS) provides 4 megabytes of storage for new data that is to be saved but has not yet been stored on DASD or for dual copy logging information. If a utility power outage occurs before the data is stored on DASD, a battery-backup system maintains power on nonvolatile storage to prevent data loss for up to 48 hours (assuming a fully-charged battery). When utility power is restored, the 3990 Model 3 destages the data to DASD and uses the dual copy logging information to resynchronize the dual copy volumes.

Warning: If you need to remove utility power or leave the Unit Emergency (UE) switch set to Power Off for more than 48 hours, ask your service representative to disconnect the NVS battery to prevent battery damage from excessive discharge.

If the NVS battery has been disconnected during a utility power outage, ask your service representative to connect the NVS battery when you restore utility power.

Nonvolatile Storage Adds DASD Fast Write and Dual Copy to the 3990 Model 3

Nonvolatile storage and its programming support add two functions to the 3990 Model 3: **DASD fast write** and **dual copy**.

DASD fast write provides a significant write performance enhancement over basic write operations because a DASD fast write operation is complete when the cache data transfer is complete. The 3990 Model 3 stores the write data simultaneously in cache storage and in nonvolatile storage, and returns channel end and device end status together at the end of the cache-speed data transfer. The copy of the data in nonvolatile storage allows the host to continue processing without waiting for the data to be written to DASD. The data remains in cache storage and in nonvolatile storage until the storage control destages the data to DASD later. In MVS/ESA and MVS/XA, DASD fast write is activated and deactivated by a system utilities command.

Dual copy is a high availability function that allows the 3990 Model 3 to create a duplicate copy of a DASD volume and store it on a different device within the subsystem. Every update is made to both copies. Dual copy improves the availability and reliability of your data. The status of the dual copy operation is kept in nonvolatile storage. In MVS/ESA and MVS/XA, dual copy is activated and deactivated by a system utilities command.

Using Nonvolatile Storage in DLS and DLSE Support Modes

In DLSE mode, nonvolatile storage is shared by both multipath storage directors. See Figure 8 on page 26 for an example.

In DLS mode, nonvolatile storage is logically divided in two equal parts by the storage control microcode; one part is allocated to each pair of storage directors in the DLS subsystems. The storage space for each DLS subsystem is kept separate and is not shared with the other DLS subsystem. See Figure 9 on page 29 for an example.

3990 Model 3 Dual-Frame Configuration Capability

The dual-frame configuration capability is a high availability option that removes all single points of failure in the storage controls that could prevent access to data.

Pairs of 3990 Model 3s can be installed in a dual-frame configuration. In a dual-frame configuration, both storage controls must be the same model. You cannot intermix a 3990 Model 2 and a 3990 Model 3 in a dual-frame configuration. However, you can intermix different capacities of cache in a dual-frame configuration. Figure 7 on page 25 shows the 3990 models that can be installed in a dual-frame configuration.

3990 Model 2 or 3 in DLS Mode Attached to 2-Path DASD Strings

Figure 9 shows a 3990 Model 3 in DLS mode attached to 2-path DASD strings. The 3990 Model 2 attaches 2-path strings in the same way.

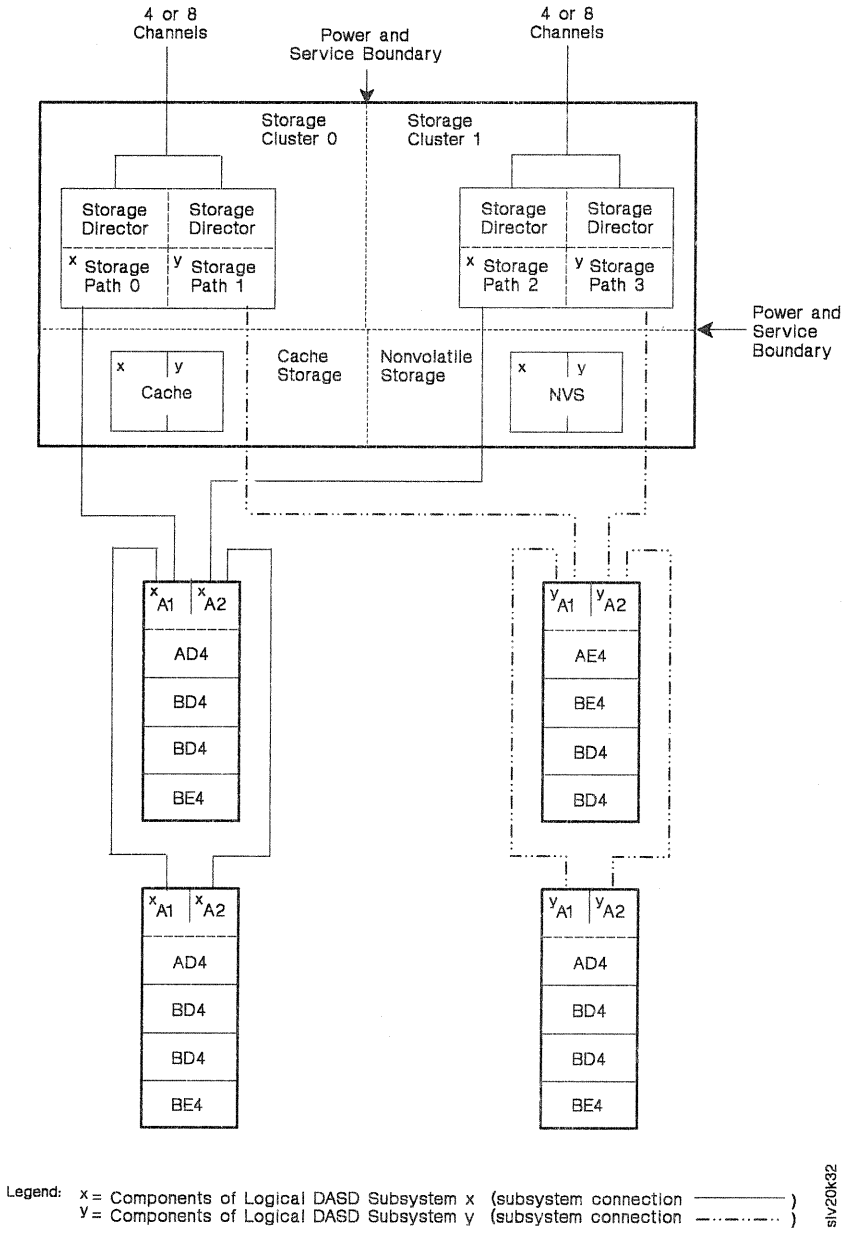

Figure 9. 3990 Model 3 in DLS Mode Attached to 2-Path DASD Strings

3990 Model 2 or 3 in DLSE Mode Attached to 2-Path DASD Strings Intermixed with a 4-Path String

Figure 10 on page 31 shows a 3990 Model 2 in DLSE mode attached to intermixed 2-path and 4-path DASD strings. The 3990 Model 3 attaches intermixed DASD strings in the same way. The figure shows the 2-path strings following the 4-path string on the control interface. You can attach the 2-path strings before or after the 4-path string.

The 3380 Models AJ4 and AK4 provide 4-path capability through the 4-Path String Attachment feature.

For a 3990 in DLSE mode, you can intermix 2-path 3380 Model AA4, AD4, and AE4 strings with a 4-path 3380 Model AJ4 or AK4 string. However, you cannot intermix 2-path 3380 Model AJ4 and AK4 strings with a 4-path 3380 Model AJ4 or AK4 string in a subsystem.

You can intermix one or two 2-path DASD strings with a 4-path DASD string. One of the 2-path strings can attach to storage paths 0 and 2 and the other 2-path string can attach to storage paths 1 and 3.

Assigning String Addresses when 2-Path Strings are Intermixed with a 4-Path String

You can define the 2-path strings as string address 0 or 1 on the storage paths to which they attach. However, you must define both 2-path strings with the same string address (0 or 1) on all storage paths. You assign the other string address (1 or 0) to the 4-path string.

Device Address Assignments when 2-Path Strings are Intermixed with a 4-Path String

In the configuration shown in Figure 10 on page 31, the 3990 assigns 32 of the available 64 device addresses to the 2-path strings and 32 of the available device addresses to the 4-path string. The string address of the 2-path strings determines whether the low 32 device addresses (00-1F) or the high 32 device addresses (20-3F) are assigned.

From the 32 device addresses assigned to the 2-path strings, the 3990 assigns device addresses to each 2-path string as follows:

- The 2-path string attached to storage paths 0 and 2 is assigned the lowest 16 device addresses (for example, 00-0F or 20-2F).
- The 2-path string attached to storage paths 1 and 3 is assigned the highest 16 device addresses (for example, 10-1F or 30-3F).

See "DLSE Mode Only—Specifying DASD String Type (64 Devices Only)" on page 231 for information on how to specify the vital product data.

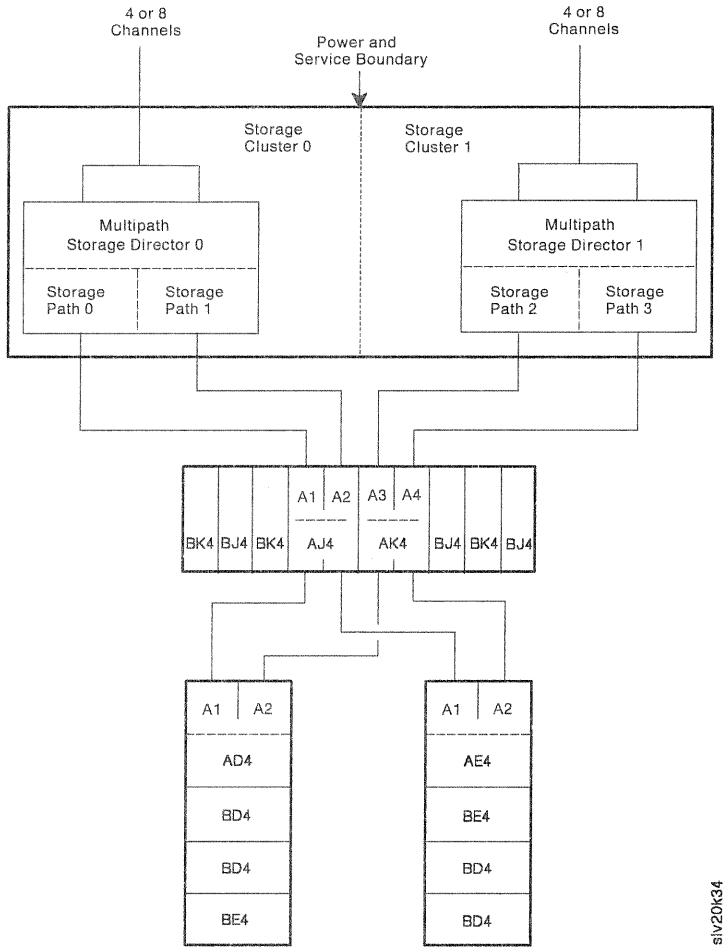

Figure 10. 3990 Model 2 in DLSE Mode Attached to 2-Path DASD Strings Intermixed with a 4-Path String

3990 Features

All 3990 features can be field-installed. Order a feature for each cluster you want the feature applied to. The features that are available on *all* 3990 models include:

- Remote/Local Capability (7149) (One feature is required for each cluster.)
- Four Channel Switch, Additional (8172)

Remote/Local Capability

The Remote/Local Capability feature (7149) allows the operator to enable or disable channels A, B, C, D, E, F, G, and H either at the operator panel or at a remote panel.

Without this feature, remote positions are disabled. The feature activates a Remote position to channel switches A, B, C, D, E, F, G, and H.

One feature is required for a 3990 Model 1. Two features are required for 3990 Model 2 or 3; one for each cluster.

3990 Feature Combinations for Four Channels per Cluster

Figure 11 summarizes the 3990 feature combinations and the number of features required for operating environments with four channels per storage cluster. In the figure:

(1) identifies that one feature is required for the specified 3990 model.

(2) identifies that a feature is required for each cluster for the specified 3990 model.

3990 Models	Four Channels Per Cluster	Remote/Local Capability
3990 Model 1 with Four Channels	Standard (no feature needed)	(1) Remote/Local Capability (7149)
3990 Model 2 or 3 with Four Channels per Cluster	Standard (no feature needed)	(2) Remote/Local Capability (7149)

Figure 11. 3990 Feature Combinations for Four Channels Per Cluster

3990 Feature Combinations for Eight Channels per Cluster

Figure 12 on page 33 summarizes the 3990 feature combinations and the number of features required for operating environments with eight channels per storage cluster. In the figure:

(1) identifies that one feature is required for the specified 3990 model.

(2) identifies that a feature is required for each cluster for the specified 3990 model.

3990 Models	Eight Channels Per Cluster	Remote/Local Capability
3990 Model 1 with Eight Channels	(1) Four Channel Switch, Additional (8172)	(1) Four Channel Switch, Additional (8172) (1) Remote/Local Capability (7149)
3990 Model 2 or 3 with Eight Channels per Cluster	(2) Four Channel Switch, Additional (8172)	(2) Four Channel Switch, Additional (8172) (2) Remote/Local Capability (7149)

Figure 12. 3990 Feature Combinations for Eight Channels Per Cluster

3990 Channel Switch Features

The following text summarizes the channel switch features, describes each feature individually, and describes the standard and optional channel attachment capabilities of the 3990 models.

Each 3990 storage cluster attaches to four or eight channel interfaces. The standard storage cluster attaches to four channels. Attaching to eight channels requires the Four Channel Switch, Additional feature. See "3990 Model 2 and 3 with the Four Channel Switch, Additional Feature" on page 36 for a description.

3990 Model 2 and 3 Standard Channel Attachment

Each standard 3990 Model 2 or 3 can attach to four channels per storage cluster, for a total of eight channels.

On the operator panel, the channel interfaces are labelled A, B, C, and D. The operator panel includes Channel switches to enable and disable the channel interfaces and a Disabled indicator for each channel interface.

For 3990 Model 2 and 3, each channel interface is available to both storage paths in a cluster.

Figure 13 on page 34 shows the channel attachment and operator panel switch configuration for a 3990 Model 2 and 3 in DLSE mode.

Figure 14 on page 35 shows the channel attachment and operator panel switch configuration for a 3990 Model 2 and 3 in DLS mode.

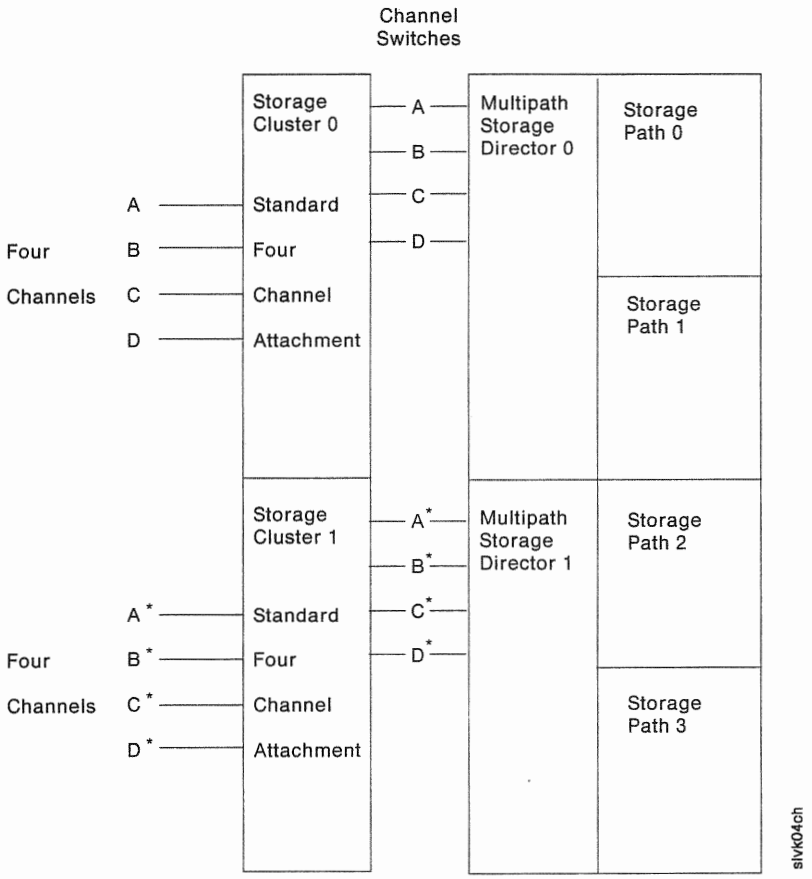

Figure 13. 3990 Model 2 and 3 Standard Channel Attachment in DLSE Mode

Notes:

* These can be different channels from the same processor or from a different processor. In a single-frame configuration, you cannot have the same physical channel enabled to both storage directors in a logical DASD subsystem. No more than four channels can be attached from any one host to any one subsystem.

1. In DLSE mode, the Channel switches for storage paths 0 and 2 enable and disable the channel interfaces at the operator panel. The Channel switches for storage paths 1 and 3 are masked.

   Channel switches enable and disable the channels for each storage director (and the two storage paths controlled by the storage director).

2. On the operator panel, each cluster (multipath storage director) has Channel switches that are represented on the figure by A-D.

3. All channels attached to storage cluster 0 can access data through storage paths 0 and 1. All channels attached to storage cluster 1 can access data through storage paths 2 and 3.

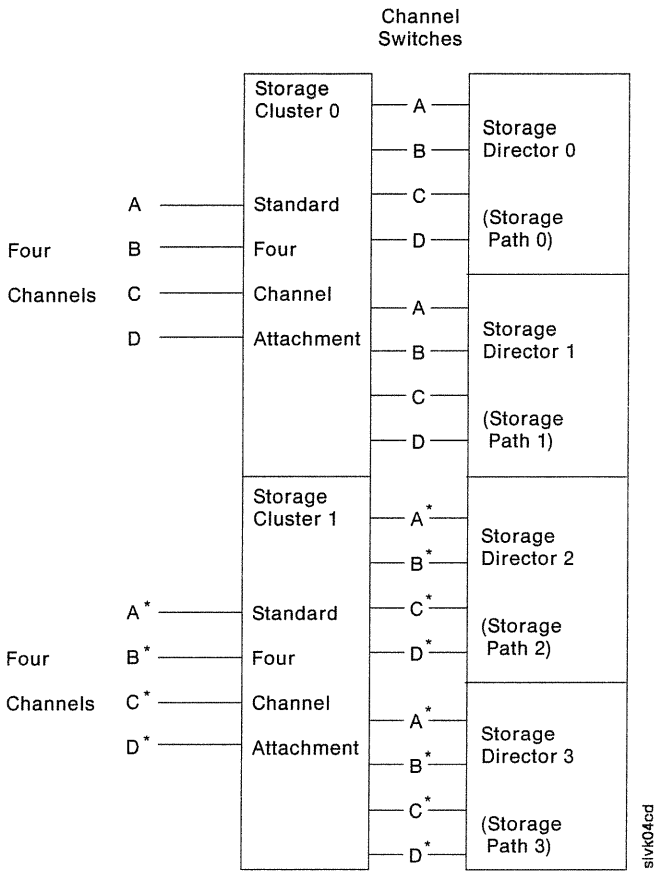

Figure 14. 3990 Model 2 and 3 Standard Channel Attachment in DLS Mode

Notes:

* These can be different channels from the same processor or from a different processor. In a single-frame configuration, you cannot have the same physical channel enabled to both storage directors in a logical DASD subsystem. No more than four channels can be attached from any one host to any one subsystem.

1. In DLS mode, the Channel switches for storage paths 0, 1, 2, and 3 enable and disable the channel interfaces at the operator panel.
2. On the operator panel, each single path storage path has Channel switches that are represented on the figure by A-D.
3. All channels attached to storage cluster 0 can access data through storage paths 0 and 1. All channels attached to storage cluster 1 can access data through storage paths 2 and 3.

3990 Model 1 Standard Channel Attachment

Figure 15 on page 36 shows the standard four channel attachment for a 3990 Model 1.

Because the 3990 Model 1 has only one cluster, the channel interfaces must be assigned to either storage path 0 or 1. You assign a channel interface to a storage path through the control unit address assignments in the vital product data. See "Assigning Channels to 3990 Model 1 Storage Directors" on page 222 for details.

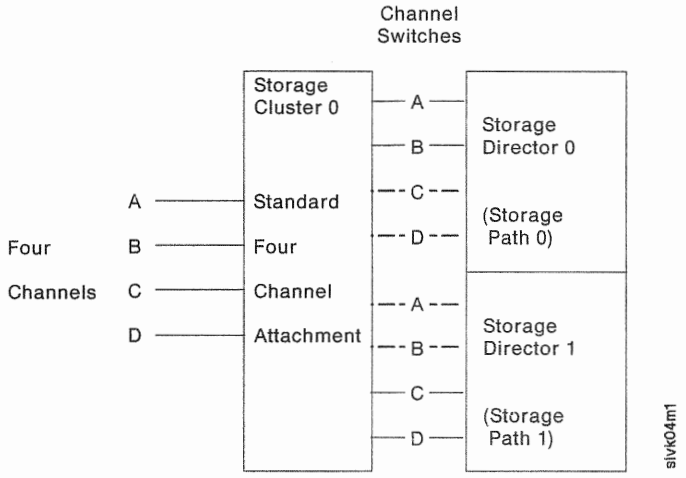

Figure 15. 3990 Model 1 Standard Channel Attachment

Notes:

1. Interfaces A, B, C, and D can be attached to different channels from the same processor or from a different processor. You cannot have the same physical channel enabled to both storage directors in a logical DASD subsystem. No more than four channels can be attached from any one host to any one subsystem.
2. On the operator panel, each single path storage path has Channel switches that are represented on the figure by A-D.
3. In this example:

   Channel interfaces A and B are assigned to storage director 0 and interface switches C and D are not functional for storage director 0.

   Channel interfaces C and D are assigned to storage director 1 and interface switches A and B are not functional for storage director 1.

   You can assign any combination of channel interfaces to either storage director, but you cannot assign one channel interface to both storage directors

3990 Model 2 and 3 with the Four Channel Switch, Additional Feature

The Four Channel Switch, Additional feature (8172) permits attaching four additional channel interfaces, E, F, G, and H, to each storage cluster. The feature adds Channel switches and Disabled indicators for interfaces E, F, G, and H to the operator panel.

Two features are required for the 3990 Model 2 or 3; one for each storage cluster. When installed, the features permit the 3990 Model 2 or 3 to attach a total of 16 channels.

For 3990 Model 2 or 3, each channel interface is available to both storage paths in a cluster.

Figure 16 on page 37 shows eight channels attached to each storage cluster of a 3990 Model 2 or 3 in DLSE mode.

Figure 17 on page 38 shows eight channels attached to each storage cluster of a 3990 Model 2 or 3 in DLS mode.

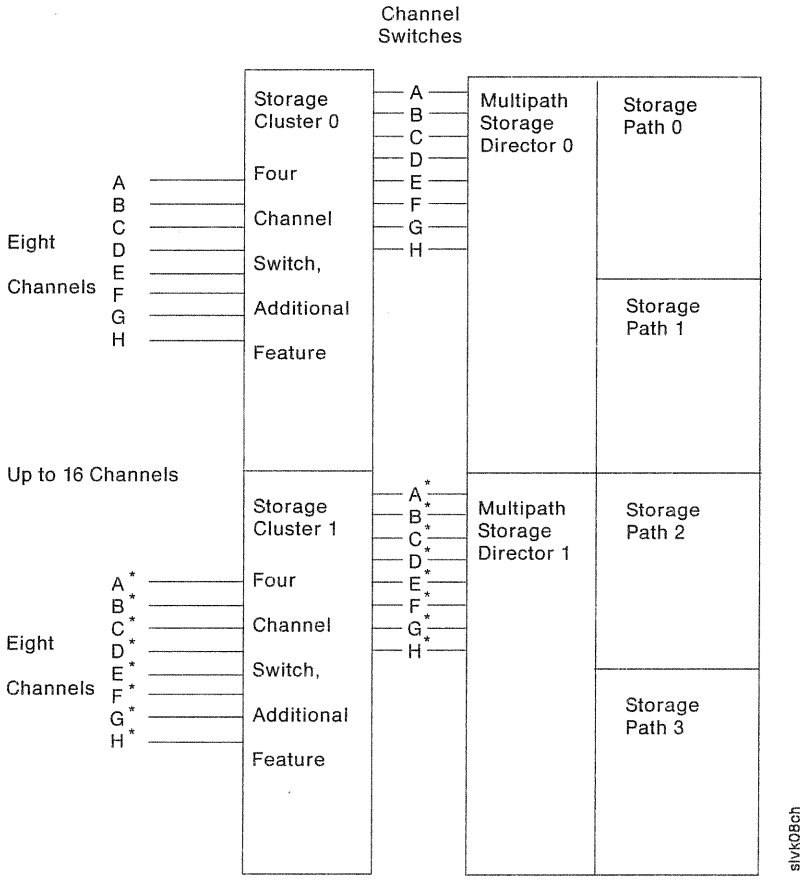

Figure 16. 3990 Model 2 or 3 in DLSE Mode with the Four-Channel Switch, Additional Feature

Notes:

* These can be different channels from the same processor or from a different processor. In a single-frame configuration, you cannot have the same physical channel enabled to both storage directors in a logical DASD subsystem. No more than four channels can be attached from any one host to any one subsystem.

1. In DLSE mode, the Channel switches for storage paths 0 and 2 enable and disable the channel interfaces at the operator panel. The Channel switches for storage paths 1 and 3 are masked.

   Eight Channel switches enable and disable the channels for each storage director (and the two storage paths controlled by the storage director).

2. On the operator panel, each cluster (multipath storage director) has Channel switches that are represented on the figure by A-H.

3. All channels attached to storage cluster 0 can access data through storage paths 0 and 1. All channels attached to storage cluster 1 can access data through storage paths 2 and 3.

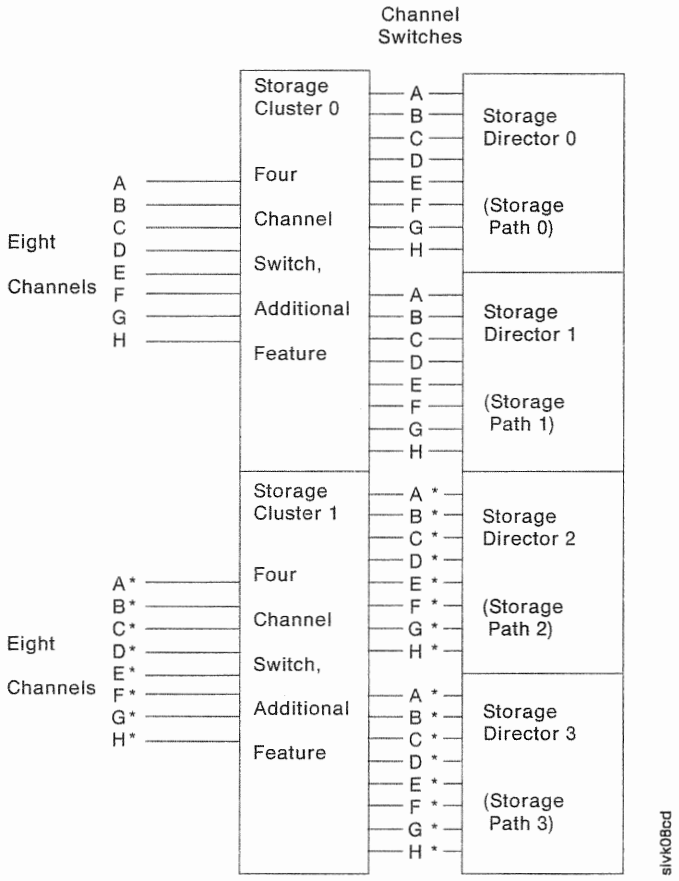

Figure 17. 3990 Model 2 or 3 in DLS Mode with the Four-Channel Switch, Additional Feature

Notes:

* These can be different channels from the same processor or from a different processor. In a single-frame configuration, you cannot have the same physical channel enabled to both storage directors in a logical DASD subsystem. No more than four channels can be attached from any one host to any one subsystem.

1. In DLS mode, the Channel switches for storage paths 0, 1, 2, and 3 enable and disable the channel interfaces at the operator panel.
2. On the operator panel, each single path storage path has Channel switches that are represented on the figure by A-H.
3. All channels attached to storage cluster 0 can access data through storage paths 0 and 1. All channels attached to storage cluster 1 can access data through storage paths 2 and 3.

3990 Model 1 with the Four Channel Switch, Additional Feature

When installed, the Four Channel Switch, Additional feature (8172) permits the 3990 Model 1 to attach a total of eight channels.

Figure 18 shows eight channels attached to a 3990 Model 1. However, because the 3990 Model 1 has only one cluster, the channel interfaces must be assigned to either storage director 0 or 1. You assign a channel interface to a storage director through the storage director control unit address assignments in the 3990 vital product data. See "Assigning Channels to 3990 Model 1 Storage Directors" on page 222 for details.

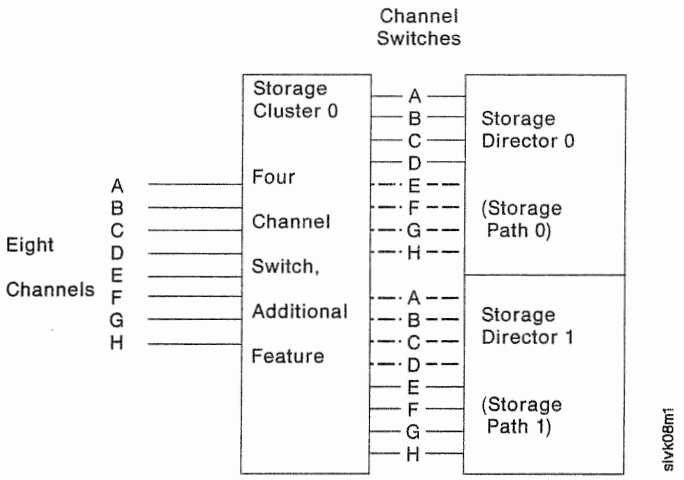

Figure 18. 3990 Model 1 with the Four-Channel Switch, Additional Feature

Notes:

1. Interfaces A, B, C, D, E, F, G, and H can be attached to different channels from the same processor or from a different processor. You cannot have the same physical channel enabled to both storage directors in a logical DASD subsystem. No more than four channels can be attached from any one host to any one subsystem.
2. On the operator panel, each storage path has Channel switches that are represented on the figure by A-H.
3. In this example:

   Channel interfaces A, B, C, and D are assigned to storage director 0 and interface switches E, F, G, and H are not functional for storage director 0.

   Channel interfaces E, F, G, and H are assigned to storage director 1 and interface switches A, B, C, and D are not functional for storage director 1.

   You can assign any combination of channel interfaces to either storage director, but you cannot assign one channel interface to both storage directors.

3380 Features

Features of the 3380 for Attachment to 3990 Storage Controls

Depending on the configuration of the AJ4 or AK4 string, one of two specific features must be applied to these A-units for attachment to a 3990 Storage Control. An update feature is required when attaching Models AD4 or AE4 to a 3990 Storage Control.

- 3990 AJ4/AK4 2-Path String Attachment, Feature 9432

  This feature must be installed on the 3380 AJ4 or AK4 unit that attaches to a 3990 Storage Control Model 1, 2 or 3 when the 3380 units are configured as a 2-path string.

- 3990 AJ4/AK4 4-Path String Attachment, Feature 9433

  This feature must be installed on each 3380 AJ4 or AK4 unit that attaches to a 3990 Storage Control Model 2 or 3 when the 3380 units are configured as a 4-path string. Note that both 3380 AJ4 or AK4 units required for a 4-path string must have this feature installed.

- 3990 AD4/AE4 Installation/Maintenance Update, EC465359/ECA131

  This feature contains the updated installation and maintenance instructions, and materials for attaching a 3380 Model AD4 or AE4 to 3990 Storage Controls.

Processor Attachment

The 3990 can be attached to the following processors:

- 3090
- 3081, 3083, 3084
- 4381
- 9375, 9377.

Host Channel Attachment

The 3990 attaches only to data streaming channels. The 3990 can attach to 3.0 and 4.5 megabytes per second channels. When the 3990 Model 3 is attached to a 4.5 megabytes per second channel, cache data transfer occurs at 4.5 megabytes per second; data transfers to and from DASD occur at 3.0 megabytes per second.

Four or eight channels can be attached to each storage cluster. However, the same channel cannot be enabled to both storage directors of a logical DASD subsystem. Channel interface switch control can be local (at the 3990), remote (at a host switch panel), or both through optional features. See "3990 Features" on page 32 for descriptions.

DASD Attachment

The 3990 attaches IBM 3380 direct access storage devices (DASD) Models AA4, AD4, AE4, AJ4, and AK4 (usually called A-units). Each A-unit can attach up to three 3380 B04, BD4, BE4, BJ4, or BK4 units. Figure 19 shows which 3380 models can be intermixed on the same string.

3380 Models	AA4	AD4	AE4	AJ4	AK4
B04	Yes	—	—	—	—
BD4	—	Yes	Yes	—	—
BE4	—	Yes	Yes	—	—
BJ4	—	—	—	Yes	Yes
BK4	—	—	—	Yes	Yes

Legend

Yes = Models can be intermixed on the same string.
See Figure 20 on page 42 for string intermixes.
— = Models cannot be intermixed on the same string, but two strings of any series can be attached to the same 3990 storage path.

Figure 19. 3380 Models that can be Intermixed on the Same String

Notes:

1. The 3990 attaches 3380 Models AA4 except:
   - For machines made in the U.S. by IBM, 3380 Model AA4 with serial numbers 10001 to 14999.
   - For machines made by IBM World Trade Corporation, 3380 Model AA4 with serial numbers 10001 to 11818.
2. The 3990 does not attach to 3380 Model A04 and Model CJ2.

Figure 20 shows the combinations of 3380 models and capabilities (2-path or 4-path) that can be intermixed in the same logical DASD subsystem. If the subsystem includes two or more strings of 3380s, both strings must attach to the same storage paths, except when intermixing 2-path DASD strings with a 4-path string. In this case, one of the 2-path strings attaches to storage paths 0 and 2 and the other 2-path string attaches to storage paths 1 and 3.

Models and Capabilities	2-Path String of 3380 Models A, D, E	2-Path String of 3380 Models J and K	4-Path String of 3380 Models J and K
2-Path Strings of 3380 Models A, D, and E	Yes	Yes	Yes
2-Path Strings of 3380 Models J and K	Yes	Yes	—
4-Path Strings of 3380 Models J and K	Yes	—	Yes
Legend Yes = Strings can be intermixed on the same logical DASD subsystem. — = Strings cannot be intermixed on the same logical DASD subsystem.			

Figure 20. 3380 Models and Capabilities that can be Intermixed in the Same Subsystem

In Figure 20, Model A refers to AA4/B04, D refers to AD4/BD4, E refers to AE4/BE4, J refers to AJ4/BJ4, and K refers to AK4/BK4.

In DLS mode, the 3990 attaches 2-path DASD strings and provides two storage paths to each logical DASD subsystem. All 3380 Models AA4, AD4, and AE4 have 2-path capability. 3380 Models AJ4 and AK4 have 2-path capability through the 2-Path String Attachment feature.

In DLSE mode, the 3990 attaches 4-path DASD strings or an intermix of 2-path and 4-path strings and provides four storage paths to each logical DASD subsystem. 3380 Models AJ4 and AK4 have 4-path capability through the 4-Path String Attachment feature. Every device in a 4-path string can be accessed by each storage path in the subsystem.

When you intermix 2-path and 4-path DASD strings within a subsystem, each 2-path string can be accessed by two of the four storage paths in the subsystem.

The multiple storage paths in each subsystem provide alternate path capability for the processor to improve both data availability and performance.

Notes:

1. You cannot intermix 2-path and 4-path strings of 3380 Models AJ4 and AK4 within a logical DASD subsystem.
2. Each DASD string attached to a 3990 must attach to two or four storage paths, depending on the DASD capability.

3. All storage paths attached to a DASD string must be in the same 3990 or must be in a pair of 3990s in a dual-frame configuration. See Appendix B, "3990 Configuration Planning Worksheets" on page 189 for valid configurations.
4. You must attach power sequence cables to each 3380 Model AA4. For 3380 Models AD4, AE4, AJ4, and AK4, power sequence cables are optional.

Maximum DASD Configuration

Figure 21 shows the maximum DASD configuration for each 3990 model.

Model/Mode	String Type	Maximum Number of Strings	Maximum Device Addresses Per String	Total Device Addresses
3990 Model 1 in DLS Mode	2-path	2	16	32
3990 Model 2 or 3 in DLS Mode	2-path	4	16	64
3990 Model 2 or 3 in DLSE Mode	4-path	2	32	64
3990 Model 2 or 3 in DLSE Mode	Intermixed 2-path and 4-path	2 (2-path) 1 (4-path)	16 (2-path) 32 (4-path)	64
Dual-Frame 3990 Model 2 or 3 in DLS Mode	2-path	8	16	128
Dual-Frame 3990 Model 2 or 3 in DLSE Mode	4-path	4	32	128
Dual-Frame 3990 Model 2 or 3 in DLSE Mode	Intermixed 2-path and 4-path	4 (2-path) 2 (4-path)	16 (2-path) 32 (4-path)	128
Dual-Frame 3990 Model 2 or 3 in DLS and DLSE Mode	2-path and 4-path	4 (2-path) 2 (4-path)	16 (2-path) 32 (4-path)	128
Dual-Frame 3990 Model 2 or 3 in DLS and DLSE Mode	2-path and Intermixed 2-path and 4-path	6 (2-path) 1 (4-path)	16 (2-path) 32 (4-path)	128
Dual-Frame 3990 Model 2 or 3 in DLSE Mode	4-path and Intermixed 2-path and 4-path	2 (2-path) 3 (4-path)	16 (2-path) 32 (4-path)	128

Figure 21. 3990 Maximum DASD Configurations

Minimum DASD Configuration

The following list gives the minimum DASD configurations for 3990:

- The minimum configuration for a 3990 Model 1 is one 3380 A-unit.
- The minimum DASD configuration for a 3990 Model 2 and a 3990 Model 3 in DLS mode is one 3380 A-unit (two storage paths will not be used).
- The minimum DASD configuration for a 3990 Model 2 and a 3990 Model 3 in DLSE mode is two 3380 Model J or K A-units interconnected with the 4-Path String Attachment feature.

Figure 22 shows the minimum DASD configuration for a 3990 Model 2 or 3 in DLSE mode.

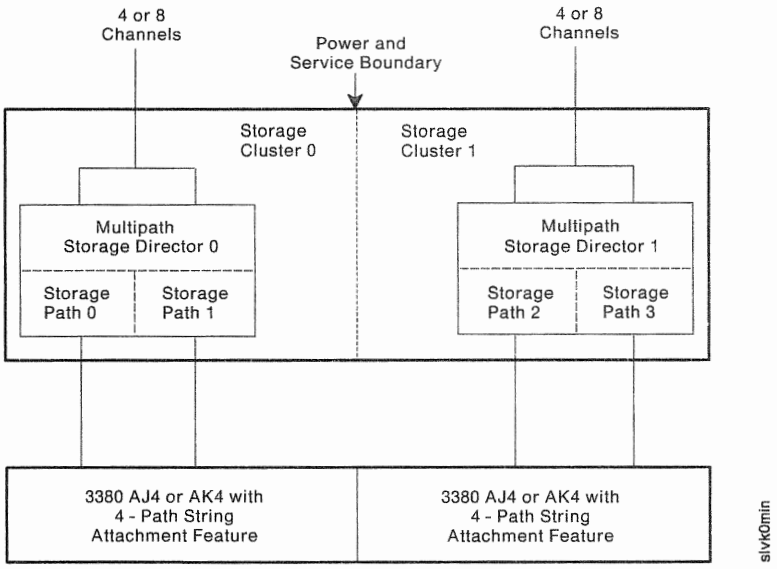

Figure 22. Minimum 3990 Model 2 or 3 Configuration in DLSE Mode

Chapter 3. 3990 Input/Output Operations

This chapter identifies the data and command formats that are supported by the 3990 and describes basic noncached I/O operations, basic cache operations, extended function subsystem operations, and cache management.

Data and Command Formats Supported by the 3990

All 3990 models support the count, key, data (CKD) data format, and the CKD and extended count, key, data (ECKD) command sets used by 3380s. Descriptions of the command sets, ERPs, sense, and status data are in *IBM 3990 Storage Control Reference*.

Basic Noncache Input/Output Operations

Basic noncache I/O operations transfer data between the channel and the DASD. Basic I/O operations are used by the 3990 Model 1, the 3990 Model 2, and the 3990 Model 3 (for volumes without device caching).

When a storage director processes a channel program and the 3990 model does not have cache installed, or for 3990 Model 3, if cache is disabled or cache is off for the selected device, all data transfers occur between channel and DASD. The DASD remains busy and cannot accept another I/O operation until the current operation completes.

Basic Noncache Seek, Search, and Locate Record Operations

The actions taken by *all 3990 models* are similar when seek commands and search commands are received. When actuator motion is required, device end is given for the seek command before the device moves the actuator. Actuator movement occurs after a Set Sector, Read, or Search command is received.

A search operation may be initiated as a result of a CKD search command, or as part of an ECKD Locate Record command, which includes a Seek and Search operation. Search commands require a search argument from channel and a data transfer from DASD to the storage director. The storage director compares the search argument with the data transferred. When the comparison is satisfied, the subsequent read or write command is performed.

Basic Noncache Read Operations

Without cache, a read operation is the transfer of data from DASD to channel. The storage director orients to the record on the device specified by the previous search and transfers to the channel the next field encountered that satisfies the read operation. When all the data has been transferred, the storage director sends channel end with device end and disconnects from the channel.

Basic Noncache Write Operations

A write operation either creates a new record on DASD or updates an existing record. Without using cache fast write or DASD fast write, all write commands transfer data from the channel directly to DASD. When all the data has been transferred, the storage director sends channel end and device end and disconnects from the channel.

3990 Model 3 Basic Cache Operations

During cache operations, data is transferred between the channel and cache, the channel and device, and the device and cache. The storage director can simultaneously transfer data between the channel and device and manage the data transfer of different tracks between the cache and channel, and the cache and DASD.

The 3990 Model 3 basic cache operations include read and write operations when cache is on and cache fast write operations when invoked through a program such as DFSORT.

The 3990 Model 3 extended functions, DASD fast write and dual copy, are described under "3990 Model 3 Extended Function Subsystem Operations" on page 51. Program support for basic and extended function operations is described in the chapter on installing the 3990 under your operating system.

Cache Status Defaults

At installation, the 3990 Model 3 uses a fixed set of cache status defaults. During normal operations, the cache status defaults can be modified. The 3990 Model 3 saves the modified cache status across IMLs.

Cache Status Defaults at Installation

Following the installation IML of a 3990 Model 3, the installation cache status defaults are:

- Cache storage is available.
- All devices in the subsystem are in caching mode.
- Cache fast write is active.
- Nonvolatile storage is unavailable.
- DASD fast write is inactive.

Cache Status Defaults after IML

The caching status of the subsystem is kept across IMLs. The availability or unavailability status of cache storage, nonvolatile storage, cache fast write, DASD fast write, dual copy, and the caching or noncaching mode of the devices remains the same as it was before the IML was performed.

Basic Cache Seek, Search, and Locate Record Operations

The actions taken by a cache and noncache 3990 are similar when seek commands and search commands are received. The difference occurs when actuator motion is required. In both operations, device end is given for the seek command before the device moves the actuator. Actuator movement occurs after a Set Sector, Read, or Search command is received, unless the data referred to by the command is in cache. No actuator movement occurs if the requested track is already in cache.

A search operation may be initiated as a result of a CKD search command, or as part of an ECKD Locate Record command. Search commands require a search argument from channel and a data transfer from either DASD or from cache to the storage director. The storage director compares the search argument with the data transferred. When the comparison is successful, the subsequent read or write command can be performed.

In a 3990 Model 3, a search command is treated as a read command. Because the caching algorithms consider search and read as equivalent, the descriptions of a read hit, read miss, and front end miss, also apply to search commands. See "Basic Cache Read Operations" for details.

When using a Locate Record command, the functions of the seek and search commands are merged with an indication of whether the following command is a read or write. The storage director decides whether actuator motion is necessary.

Basic Cache Read Operations

Read operations include search and read (other than Read Sector) commands. In a cache operation, a read operation is the transfer of data from cache to channel, or DASD to cache and channel. Except for bypass cache mode, if the requested data is not in cache, the requested data is simultaneously transferred to cache and the channel. The following records on the track are transferred to cache. See "Bypass Cache" on page 57 for additional information.

If the host program specifies sequential data organization, the 3990 Model 3 stages the accessed track and the next two tracks into the cache. The cache directory entries for all accessed track slots are updated to reflect their most recent use.

The following are examples of cache read operations.

Read Hit: Occurs when the requested record is in cache. The channel command word (CCW) chain operates only with cache and the DASD volume is not accessed. Because no DASD access is required, seek time, latency, and rotational position sensing (RPS) miss delays are eliminated. The storage director:

1. Searches in cache for the proper track.
2. Transfers the requested data to the requesting channel.
3. Presents channel end and device end to the channel.
4. Updates the directory entries for all accessed tracks to show these tracks as "most recently used."

Read Miss: Occurs when the requested track is not in cache. The storage director allocates space in cache. The missing track is then transferred from DASD to cache and to channel at the same time. The sequence of events for a read miss is:

1. The storage director disconnects from the channel.
2. The storage director uses the stored arguments from the preceding Seek/Set Sector (or Locate Record) commands to position the actuator.
3. The storage director reconnects to the channel to process the subsequent (usually search and read) commands. When the search is satisfied, the record requested by the read operation is transferred to both the channel and cache from the device. Channel end and device end are signalled and the channel becomes available. From the processor's point of view, the I/O operation is complete.

4. The storage director continues to transfer data to cache until the end of the track is detected. This transfer occurs without further channel involvement.
5. The directory entry for all tracks valid in the cache and accessed by the CCW chain are made "most recently used" in the LRU list. See "Least Recently Used (LRU) Algorithm" on page 55 for a description of the list.

Front End Miss: Tracks are normally promoted from the first record following the addressed sector to the end of the track. Therefore, many cache slots actually contain partial track images. When the requested track is in cache, but the sector or record is not, only records at the front end of the track (the records from record 0 to the records that already exist in cache) are transferred from DASD to cache.

Basic Cache Write Operations

The primary objective of a basic cache write operation is to emulate a DASD write and to ensure that the DASD copy of the data is always valid. All write commands operate directly with DASD unless DASD fast write or cache fast write is active. Cache fast write is described under "Cache Fast Write Operations" on page 49 and DASD fast write is described under "3990 Model 3 Extended Function Subsystem Operations" on page 51.

The storage director considers an I/O request to be a write operation as soon as it detects any write-type command in the chain. For example, the write operation can be a format write or an update write. A Format Write command establishes count areas of the track, and formats the key and data areas of each track. An Update Write command changes the key and data areas of existing records without affecting other areas of the record or other records in the same track.

Cache Write Operations without Cache Fast Write and DASD Fast Write

In cache operations without cache fast write or DASD fast write, a write operation follows these general rules:

- A format write operates directly with DASD. If the track is in cache, it is invalidated.
- If the track modified by an update write operation is in cache, the cache and DASD are updated concurrently (a write hit).
- If the track modified by an update write operation is not in the cache, the operation is a write miss. Only the data on DASD is updated.
- No new tracks are transferred from DASD to cache as the result of a write operation.
- In bypass cache mode, a write hit causes the track in cache to be invalidated. See "Bypass Cache" on page 57 for additional information.
- A track is never made "most recently used" by a write hit in basic caching operations.

The attributes set by the Define Extent command (bypass cache, inhibit cache loading and sequential access) usually do not affect the write I/O request once the write command is received. The exception is in bypass cache mode, where a write hit causes the track to be invalidated.

The following are examples of write operations.

Write Hit: Occurs when a write request updates a record that is already in cache. Without fast write active, the 3990 Model 3 storage director:

1. Searches the track slot for the proper record.
2. Encounters the write command and disconnects with channel command retry.
3. Positions the actuator.
4. Reconnects to the channel.
5. Transfers the data to cache and DASD concurrently.
6. Presents channel end and device end.

Write Miss: Occurs when a write request updates a record that is not in cache. Except for the initial cache directory search, a write miss on a 3990 Model 3 works exactly like a write operation on a 3990 Model 1 and 2:

1. DASD orients to the proper location
2. Data is transferred from the 3990 to DASD
3. 3990 presents channel end and device end to the channel.

Cache Fast Write Operations

Cache fast write is provided for applications that generate data that may not be required at the completion of the current job or data that could be easily reconstructed if necessary. Thus, the data does not need to be transferred to DASD immediately. Figure 23 on page 50 shows an overview of a cache fast write operation.

A cache fast write hit is similar to a basic cache read hit in that the entire operation is performed with the cache; no DASD access is required. The 3990 returns channel end and device end status for a cache fast write operation as soon as the data is stored in cache. Write hits cause the record to be made "most recently used." In many cases, the data never needs to be written out to the DASD but may be discarded when no longer required (such as a sort work file). When cache space is needed, the 3990 Model 3 destages the least recently used data to DASD. The 3990 Model 3 also provides a channel command to cause the data to be destaged to DASD. See *IBM 3990 Storage Control Reference* for channel command descriptions.

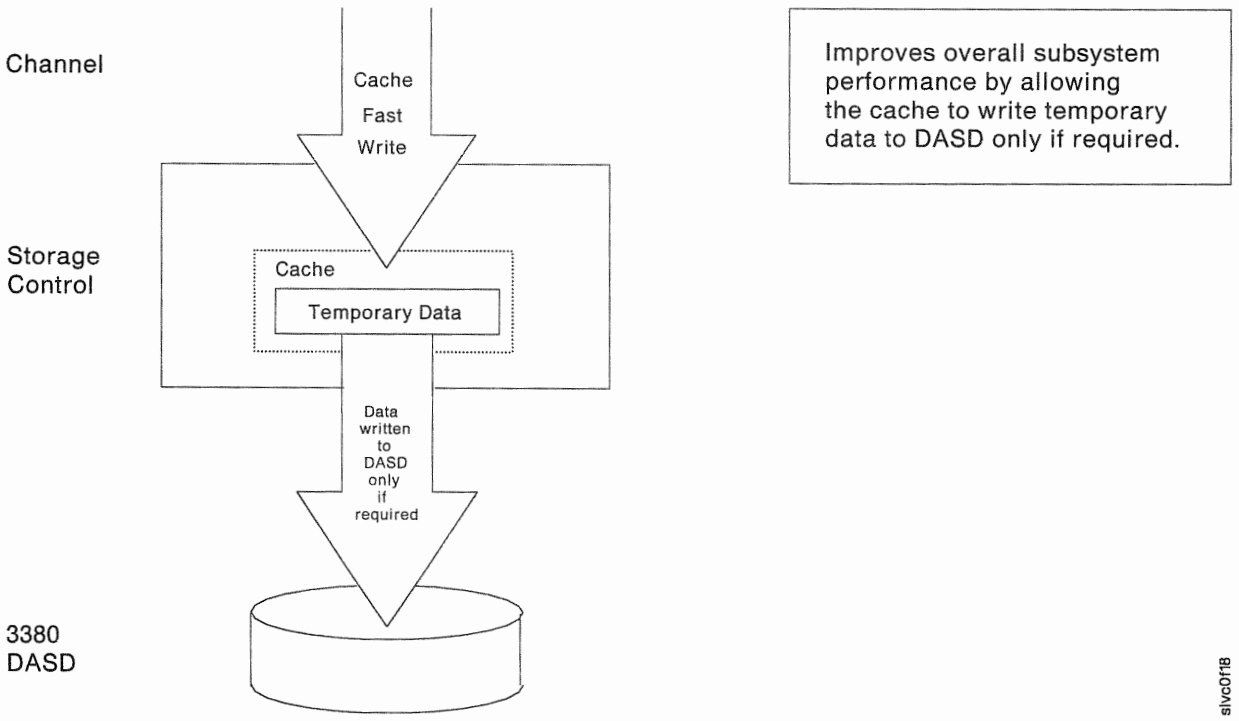

Figure 23. Cache Fast Write Operation

The appropriate release of DFSORT will support cache fast write with basic cache operation support. With the availability of the extended function support, MVS/ESA and MVS/XA users will be able to use the IDCAMS utility to activate and deactivate cache fast write for the subsystem.

The default state is cache fast write active.

If cache fast write is not active for the subsystem, channel commands specifying cache fast write operate directly with DASD.

Subsystem caching and device caching must both be active to use cache fast write on that device. Cache fast write is ignored for a dual copy volume. Cache fast write is allowed on all caching volumes in the same subsystem that are not using dual copy.

3990 Model 3 Extended Function Subsystem Operations

This section describes the subsystem operation of the 3990 Model 3 extended functions:

- DASD fast write
- Dual copy.

Program support for basic and extended function operations is described in the chapter on installing the 3990 under your operating system.

DASD Fast Write

DASD fast write improves the write performance of the 3990 Model 3 because concurrent access to a physical DASD is not required for write hits and predictable writes to ensure a nonvolatile copy of the data is saved.

During the data transfer part of a DASD fast write operation, data is written concurrently in cache and in nonvolatile storage. When the cache-speed data transfer is complete, the 3990 Model 3 returns channel end and device end status to the channel; there is no need to wait for the data to be transferred to DASD. The data is destaged from cache to DASD asynchronously.

Thus, the DASD fast write operation is as fast as a read hit. The cache management algorithm ensures the cache and nonvolatile storage each have a reserve of available space. Figure 24 on page 52 shows an overview of a DASD fast write operation.

If a power failure should occur, the 3990 retains the data in nonvolatile storage for up to 48 hours, assuming a fully-charged battery. When power is restored, the 3990 destages the data from nonvolatile storage to DASD.

DASD fast write is activated through a system utility command and remains active until explicitly deactivated by another command.

To use DASD fast write, the following conditions must exist:

- Cache and nonvolatile storage must be available.
- Caching must be active for the device.
- DASD fast write must be active for the device.
- The user must ensure the volume has a standard track format (record 0 is formatted with a key length of zero and a data length of 8). IBM access methods use standard track formats.

DASD Fast Write - Improved Data Performance

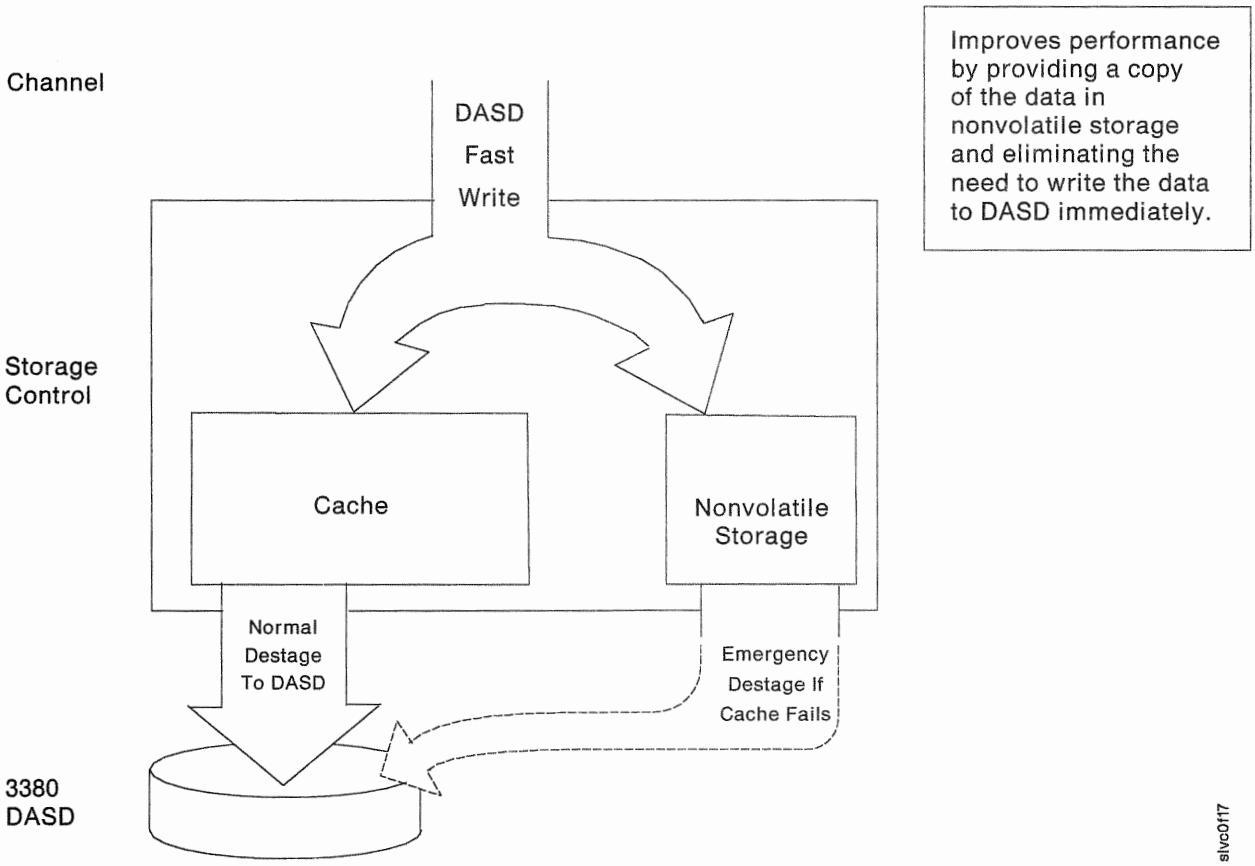

Figure 24. DASD Fast Write Operation

DASD fast write is activated at a volume level and is the default for all write operations directed at that volume. DASD fast write can be inhibited at the channel program level.

DASD fast write applies to all write hits and "predictable writes" (which are treated as write hits). A predictable write is a Locate Record Format Write that formats the full track beyond R0. See "3990 Subsystem Cache Management" on page 54 for additional information.

On a DASD fast write hit, the copy of the record in cache is updated and the data is stored in nonvolatile storage. The track slot is marked "most recently used." Later, the updated record is written to the DASD. A DASD fast write miss functions in a manner similar to a basic cache read miss; the track is transferred to cache, updated in cache and on DASD, and the subsequent records on the track are staged into the cache.

When you deactivate DASD fast write, the 3990 destages the DASD fast write data to DASD.

Dual Copy

The 3990 Model 3 dual copy function allows you to maintain logically identical copies of a DASD volume on two different devices in the same subsystem. The 3990 Model 3 internally synchronizes the volumes by writing all modified data on both volumes. Thus, dual copy provides:

- Significantly enhanced data availability during a volume outage by automatically directing all accesses to the operational volume
- Reduced host program overhead by eliminating the need for duplicate write operations to maintain two identical volumes
- Automatic resynchronization of a volume after repair

To use dual copy, you establish two devices as a *dual copy logical volume* (usually called a *duplex pair*). One device is designated as the *primary* and the other is designated as the *secondary*. The primary is online. You must vary the secondary offline to *all* systems before you establish the duplex pair.

After the duplex pair is created, the secondary remains offline even after a system IPL (unless the duplex pair is reset to simplex mode). When the duplex pair is reset to simplex, the volume used as a secondary can be given a new volume serial number ("clipped") and be varied online again. Figure 25 shows an overview of a dual copy operation.

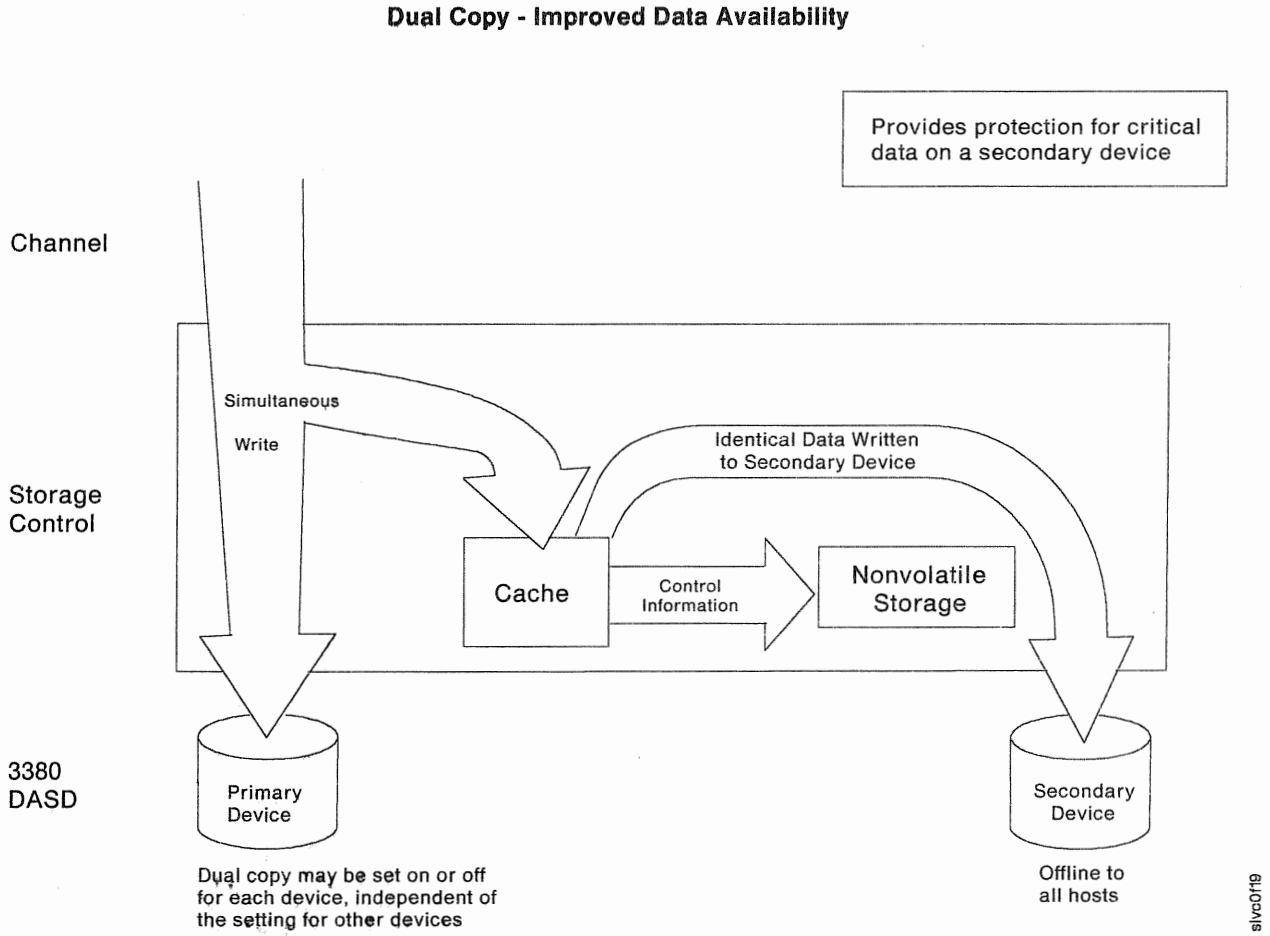

Figure 25. Dual Copy Operation

In MVS/ESA and MVS/XA, when you establish a duplex pair, the 3990 copies the contents of the primary volume, including the volume serial number, to the secondary volume. During the copy operation, the host application has continuous access to the primary volume, providing that a dedicated copy operation was not specified.

A write operation to the dual copy logical volume (duplex pair) is handled as a normal write operation. Channel end and device end status are presented to the channel at the completion of the write operation on the primary device. The updated record is subsequently written to the secondary device. The completion of the write operation on the secondary is not signalled to the host unless an error occurs.

During read operations, the 3990 Model 3 reads the data from the primary device. If the read operation from the primary device fails due to a data check, the data is read from the secondary device. If any other permanent device hardware error occurs on either of the devices, the dual copy operations are suspended. The duplex pair is set to suspended duplex mode. While in suspended duplex mode, all I/O operations are directed to the operational device.

Using DASD Fast Write and Dual Copy Together (Fast Dual Copy)

Activating DASD fast write and dual copy together provides a significant performance enhancement to the dual copy operation. This combination of extended functions is called "fast dual copy."

On a write hit, when DASD fast write and dual copy are active:

- Data from the channel is stored in cache and nonvolatile storage.
- Channel end and device end are presented immediately to the channel.
- Data is transferred from cache to the primary, asynchronous to host I/O operations.
- Data is transferred to the secondary when space is needed in the cache and/or nonvolatile storage, or when a cache or NVS error occurs.

3990 Subsystem Cache Management

The following describes the techniques used by the 3990 to manage cache at the subsystem level.

Track Slots and Track Data

A track slot is the image of all or some portion of the data that resides on the associated track.

When space in cache is assigned to a track slot, the 3990 Model 3 allocates the three 16K segments required to hold the entire track. Because of inter-record gaps and not starting at the beginning of tracks, most tracks fit in two segments or less. Unused segments are released. This allows any given cache size to contain more data and have higher hit ratios than if there was no segmentation of the tracks.

If existing track slots require additional space, the storage director allocates more segments as required. This happens during the front end promotion and format write of tracks.

Track data in cache can be in one of the following forms:

1. A full track image with all data from home address to index. This occurs when the first record on a track is read.
2. A partial track image with all the data from the count field of any but the first record, up to index. This is created when the data transfer to channel starts on any but the first record on a track.
3. A full track image, loaded in two parts. This occurs when the accessed track exists as a partial image in the cache (as in 2 above) but the addressed sector is not part of this partial image. In case of such a front end miss, the remainder of the track is loaded into the track slot (as described in "Basic Cache Read Operations" on page 47).

   For data sets with small block sizes (PDS directories and VTOCs, for example), a very substantial space savings can result because the inter-record gaps are not stored in the cache.

Least Recently Used (LRU) Algorithm

The LRU algorithm replaces the least recently used data in cache when space is needed for new data in cache. The LRU algorithm optimizes cache performance through high hit ratios and ensures that the most appropriate data is stored in the cache at any one time.

Stage, destage, promote, and demote are operations that the 3990 Model 3 performs as it manages cache through the LRU algorithm. Their definitions follow.

Promotion The process of validating a track image in the cache. Promotion may or may not involve staging the track from DASD to cache.

Demotion The process of removing the image of one or more records from cache storage. A set of one or more DASD records is demoted either by being selected for replacement (overlay) by another set of DASD records or by being marked invalid.

Stage The process of writing data from a DASD to the cache.

Destage The asynchronous write of new or updated data from cache storage or nonvolatile storage to DASD. Destage is used only for the 3990 Model 3 fast write and dual copy functions.

Whenever a new track is promoted to cache, track slot segments are allocated. If all the track slot segments are in use, the storage director selects the most appropriate track slot to be demoted or destaged.

All track slots are contained in an LRU list in cache storage (see Figure 26 on page 56 for an example). At the top of the LRU list is the "most recently used" track slot segment. Further down the list each entry is less and less recently used; at the bottom of the list is the "least recently used" entry.

Each time new data is promoted, the track slot is selected from the bottom of the LRU list. The "least recently used" track is demoted unless it contains modified data; in which case it is destaged. The track slot is overlaid with the new data; the old data is not destaged to DASD if a valid copy exists on DASD. Cache and DASD fast write use "anticipatory destage" to maintain a buffer of free track slots. Cache fast write or DASD fast write data may have to be destaged to DASD before the least recently used track slot can be overlaid.

A newly promoted track slot or a track slot that is the target of a read hit is marked most recently used by moving it to the top of the LRU list. Cache fast write and DASD fast write modify this algorithm to include write hits. Cache and DASD fast write hits make the track slot most recently used, which is the least likely to be demoted.

The management of the LRU list is summarized in Figure 26. As a general rule:

- A read operation, a cache fast write hit, or a DASD fast write hit causes the track slot to be made most recently used.
- Basic cache write operations leave the slot's position in the LRU list unchanged.

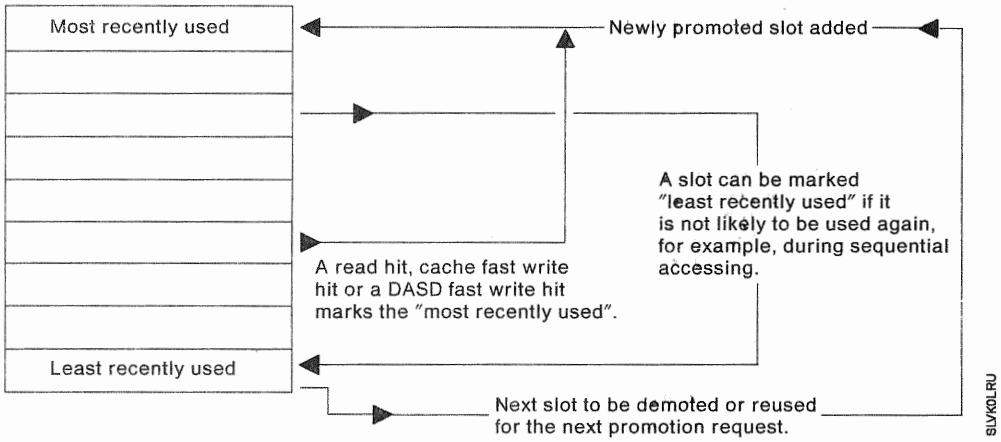

Figure 26. Example of an LRU List

Cache Modes

One of several cache modes can be specified by the access method on an I/O operation basis in the Define Extent command.

Cache modes are determined by the executing channel program, in contrast with enabling or disabling caching, DASD fast write, or cache fast write, which are set by a system utility or during an IML, and maintained across IMLs until changed. The following headings describe each cache mode.

Normal Caching Mode

Normal caching is the default mode. That is, it is in effect until a Define Extent channel command changes the caching mode.

Read hits and fast write hits benefit from normal caching mode.

When a read miss occurs, the requested record and the remaining records on the track are promoted into cache.

When space is needed in cache for additional tracks, the 3990 destages the least recently used tracks to DASD. See "Least Recently Used (LRU) Algorithm" on page 55 for details.

Sequential Access Mode

Sequential access mode can be set by the Define Extent command when the access method specifies that tracks be accessed sequentially. The storage directors improve the hit ratio by promoting tracks in advance, before a read miss occurs. The storage directors also minimize the number of track slots occupied by a data set by demoting track slots shortly after they have been processed.

The initial processing of a read command and any resulting promotion is basically the same as described for a read operation. Also, the same sequences are followed for a read hit, read miss, or front end processing.

After the initial processing is complete, the storage director may promote and demote additional tracks. This depends on whether or not the next sequential track is in cache.

The tracks are not promoted if the:

- Track location is not within the range specified by the Define Extent command.
- Track is not in the same cylinder as the preceding track.

Bypass Cache

This mode is set by the Define Extent command and causes the data in the cache to be bypassed. The I/O request is sent directly to DASD. Tracks are neither read from cache, promoted to cache, nor are their entries in the LRU list updated.

If a basic write operation occurs in this mode and the track is also in the cache (normally this would have been a write hit), the corresponding cache slot is marked invalid. If the track slot was modified by a previous cache fast write hit or a DASD fast write hit, the track is destaged and the slot is marked invalid. The performance of each I/O operation is almost equivalent to the 3380s being attached to a noncache storage control. (The difference is the required directory search on a write operation.)

When WRITECHECK is requested for a data set, each write operation is followed by a read operation that performs a read-back check of the data. Thus, the read-back check adds up to 16.6 milliseconds of latency to each write operation. The WRITECHECK option is a trade-off between additional data reliability and a reduction in performance.

With the exception of programs using EXCP, all data sets for which WRITECHECK is requested and which are OPENed for OUTPUT or UPDAT, will operate in bypass cache mode for the WRITECHECK write/read CCW chain. For example, some access methods use bypass cache mode for all CCW chains if WRITECHECK is specified. ICKDSF uses bypass cache mode to ensure it accesses data from DASD.

Before requesting WRITECHECK on a caching device, you should check to see if the best performance might be achieved by locating the data set on a non-cached device.

VM/SP HPO uses the bypass cache mode to access minidisks that the VM directory indicates cannot use the cache.

Inhibit Cache Loading

This mode is set by the Define Extent command and uses existing copies of tracks if they are in the cache, but does not load any new tracks into the cache. The 3990 Model 3 proceeds as follows:

- If the requested track is in cache, the channel program operates with the cache exactly as in normal cache replacement mode.
- If the operation is a cache or DASD fast write full-track format write following a Locate Record command, the channel program operates with the cache exactly as in normal cache replacement mode.
- If the requested track is not in cache, the channel program operates directly with DASD. Apart from the directory search to determine whether or not the track is in cache, the operation is performed the same as on a noncache storage control.

The purpose of this cache mode is to avoid the overhead that may be caused by track promotion when there is no benefit (that is, whenever these slots are not likely to be accessed again soon).

Data Facility Data Set Services (DFDSS) uses inhibit cache loading mode, but this mode is not appropriate for most accesses and is not used by any of the MVS or VM access methods.

Chapter 4. Subsystem Performance Considerations

This chapter describes the performance considerations for a 3990 storage subsystem. This chapter also describes how 3990 components such as cache size, cache read, and cache write hit ratios affect performance. Some of the device variables described include seek, latency, search times, and the DASD capability.

3990 Performance Guidelines

The 3990 Model 3 technological improvements significantly reduce the importance of a detailed analysis of caching data set candidates. In most cases, you can install a 3990 Model 3 and receive a performance improvement with no analysis of the data sets behind the storage control. This is made possible by:

- Larger cache capacities provide for higher read hit ratios or may reduce the need to remove data sets with lower hit ratios.
- Fast write capabilities add high write activity volumes to the list of caching candidates, removing the need to segregate high-write-activity data sets.
- 4.5 megabytes cache data transfer capability.
- More efficient microcode reduces the control unit utilization; thereby reducing the control unit overhead due to staging activity and allowing acceptable performance at lower hit ratios.
- Improved cache utilization provides for higher read hit ratios.
- Improved caching algorithms provide for higher hit ratios, improving cache performance for high-activity sequential access files.
- DLSE mode reduces the impact of storage control internal path busy conditions.

Figure 69 on page 141 gives data set selection guidelines for cache and cache fast write operations. Figure 70 on page 142 gives data set selection guidelines for DASD fast write operations. In Figure 69 on page 141, data sets in the "Best Cache Candidates" category require little analysis beyond ensuring that the I/O rate through the storage control is reasonable.

You can gradually add more data sets (and consequently more activity). As you do this, ensure that the DASD subsystem response times and system-level performance remain acceptable.

The performance of DASD fast write in typical TSO and IMS data base applications has been modelled using data collected from representative large TSO and IMS data base systems. In such environments, DASD fast write improved subsystem response time and increased the number of accesses per second.

Performance Recommendations for Noncached DASD Operations

The following books provide detailed performance recommendations for noncached DASD operations. See the book that applies to your operating system.

- *Using the IBM 3380 Direct Access Storage in an MVS Environment*
- *Using the IBM 3380 Direct Access Storage in a VM Environment*
- *Using the IBM 3380 Direct Access Storage in a VSE Environment.*

Configuration and Performance

The workload of various components of a subsystem determines how to configure a 3990 subsystem with and without cache. The following text describes some considerations for configuration.

Subsystem Components

For a given I/O operation, various components of the subsystem are busy at different times. The following text summarizes the circumstances when each component is busy. The components include:

- Channel path
- Storage director
- 3380 internal path
- 3380 actuator.

Note: The scale of the figures in this chapter is only approximate.

Device Service Time on a Noncached Actuator

When you analyze the device service time of a noncached actuator as reported by Resource Measurement Facility (RMF) (connect plus disconnect time in MVS/ESA and MVS/XA), you can see the device busy time by I/O operation. Figure 27 on page 61 shows how the device service time for a simple I/O request is subdivided into the following series of different activities.

Seek

Actuator arm movement may take up to 30 milliseconds. Often no arm movement is necessary, so the seek time is zero. In our example, a seek takes 4 milliseconds.

Latency

The 3380 DASD rotation time for the desired disk sector to arrive under the read/write head can be from no rotation (no latency) up to a full rotation (16.6 milliseconds). Since I/O requests usually arrive at the device at random intervals, we assumed an average latency of half a rotation (8.3 milliseconds). During Seek and Latency, the channel, storage director, and both the 3990 and 3380 internal paths are free for other work.

Reconnect Miss (RPS Miss) can add to latency. A reconnect miss is usually called a rotational position sensing (RPS) miss. Each RPS miss adds 16.6 milliseconds to the latency time. Each time the desired sector arrives under the read/write head, the storage director either reconnects with the channel, or another RPS miss

occurs until the reconnection is successful. Using DLSE, and Dynamic Path Reconnect in MVS/ESA and MVS/XA reduces the occurrence of RPS miss.

Search and Overhead

Some channel programs do not specify the exact sector number in the Set Sector command. In this case reconnection to the channel takes place somewhat before the desired data arrives at the read/write head. The search command may take a few milliseconds to find the desired data. You can also have multitrack searches that require more than 16.6 milliseconds to complete.

Data Transfer

The read or write transfer with cache is quite fast. Assuming a blocksize of 4K and a 4.5 megabyte channel, the transfer takes about 0.9 milliseconds. For 3.0 megabyte channels, the data transfer takes about 1.3 milliseconds.

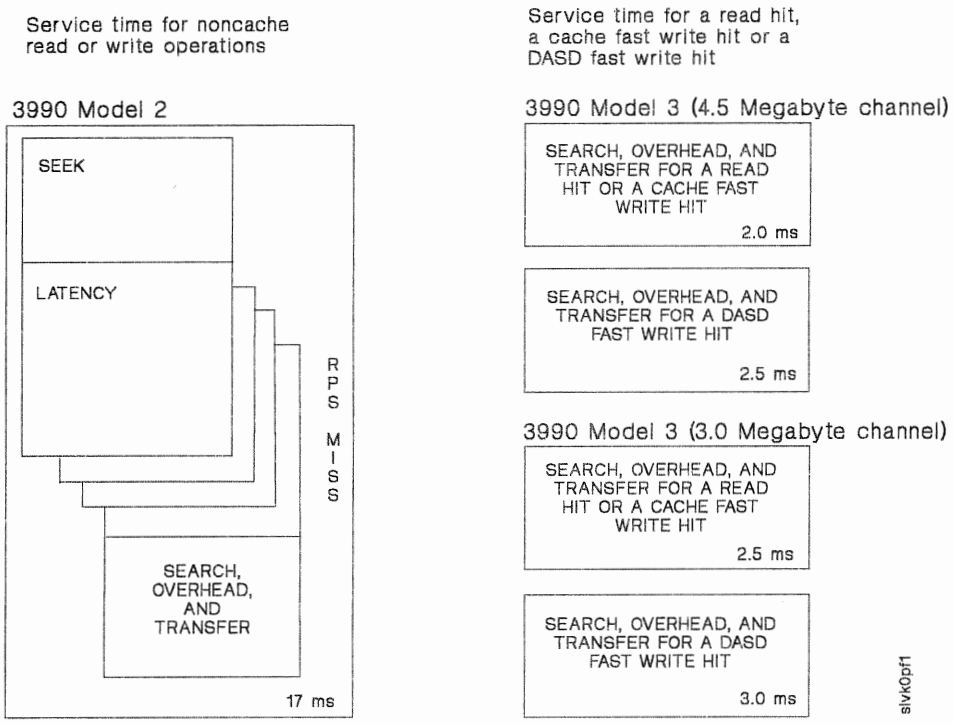

Figure 27. Comparing 3990 Model 2 Service Time with a 3990 Model 3 in DLSE Mode Read or Fast Write Hit

Note: The numbers shown in Figure 27 are rounded to the nearest 1/2 (0.5) millisecond. They represent modelled results for the indicated operations and have not yet been validated in a production environment. **Other environments, configurations, and processors will experience different levels of performance. Accordingly, these figures do not constitute a performance guarantee or warranty. These numbers reflect only part of the performance improvement provided by the 3990 Model 3. The subsystem performance graphs shown in** *IBM 3990 Storage Control Introduction* **demonstrate the performance improvements that are attainable through the improved 3990 internal operations.**

Device Service Time on a 3990 Model 3

For a non-fast write operation (hit or miss), the service time and the device busy time is similar to that of a noncache storage control as described in Figure 27 on page 61.

For a read miss, the service time is also the same but the physical device busy time is somewhat longer (see Figure 30 on page 64).

For a read hit and a fast write hit (either DASD fast write or cache fast write), a drastic service time reduction is achieved.

- Seek and latency times are eliminated. Note that an RPS miss cannot occur, because the channel does not disconnect from the 3990.
- Search time is considerably shorter than on DASD, because the search command is processed in the cache at microprocessor speed, while on the DASD it can be processed only at the speed of the disk rotation.

Figure 27 shows the total service time for a read hit and a cache fast write hit or a DASD fast write hit for 3.0 and 4.5 megabyte channels.

Channel, Storage Director, and DASD Component Usage

Except for the device internal paths and the actuator, it is difficult to estimate how busy the various components of the subsystem are, since some of them are busy at different times. The cache management causes components to be busy in addition to the time reflected by the device service time.

To understand the component busy status relative to device service time, the figures on pages 63 and 65 show which subsystem components are busy in relation to the device service time as seen by the attaching host processor.

In each of these figures, the horizontal axis is an indication of time, with no claim to accuracy. The times illustrated are not precise, but are intended to give a general order of magnitude.

The figures show some of the more common situations (for example, a read hit or read miss in normal caching mode). CCW chains with single read or write commands are illustrated. No attempt is made to cover all of the possibilities with all of the cache management attributes.

The horizontal bars indicate the busy time for each of the components of the subsystem. The busy time for the device itself has been further subdivided to indicate what the device is doing for the various periods. The codes used are:

S **Seek time**. The actuator is in motion performing a seek operation.

R **Latency time**. The device is performing a set sector operation and a channel reconnect is pending. One-half a DASD revolution is a typical value used for calculations.

F **Search and overhead time**. The device (and storage control) are performing a search operation. This time may vary significantly according to the access method used.

X **Data transfer**. A read or write operation is taking place on the device. Read hits and fast write hits operate at 4.5 megabytes per second. On a 4.5 megabyte channel, DASD data transfers occur at 3 megabytes per second.

A **Asynchronous data transfer**. The promotion of data from DASD to cache is taking place while the channel is disconnected. This data transfer has no association with a data transfer operation that may be occurring between the cache and the channel.

blank **Busy**. The device is not performing any physical operation but still appears busy to the processor.

Also indicated across the top of each diagram is the service time as seen by the attaching processors for each of the operations.

Note that the granularity of the diagrams is such that very small time differences may appear in distorted proportions.

3990 Model 3 Write Without Cache Fast Write (Similar to 3990 Model 2 Read/Write)

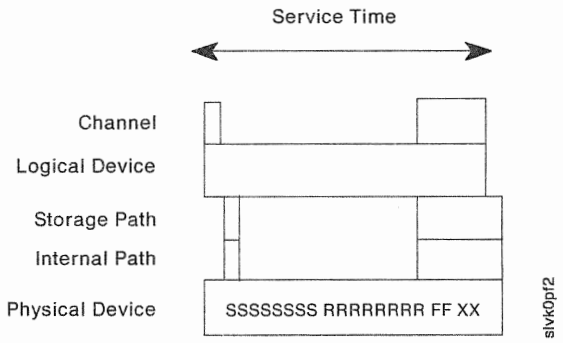

Figure 28. 3990 Model 3 Write Without Cache Fast Write (Hit or Miss)

Note: Without cache fast write, the times at which the 3990 Model 3 subsystem components are busy are very similar to 3990 Model 2 components.

3990 Model 3 Read Hit and Cache Fast Write Hit

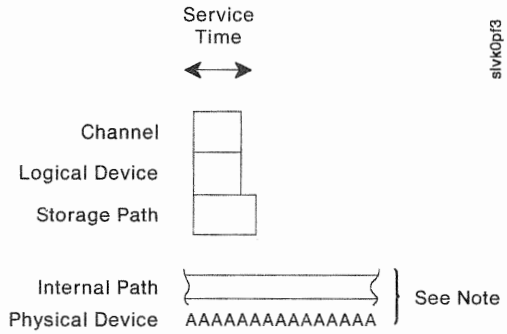

Figure 29. 3990 Model 3 Read Hit and Cache Fast Write Hit

Note: The asynchronous data transfer shown for the physical device is not associated with the data transfer between the logical device and the channel. In this example, the physical device is busy with an unrelated data transfer operation such as staging or destaging data to/from DASD. At another time snapshot, the asynchronous data transfer may not be occurring.

3990 Model 3 Read Miss, Cache Fast Write Miss, or Front End Miss at Sector Zero

Front end miss processing is shown for completeness. However, in most environments, a front end miss rarely occurs.

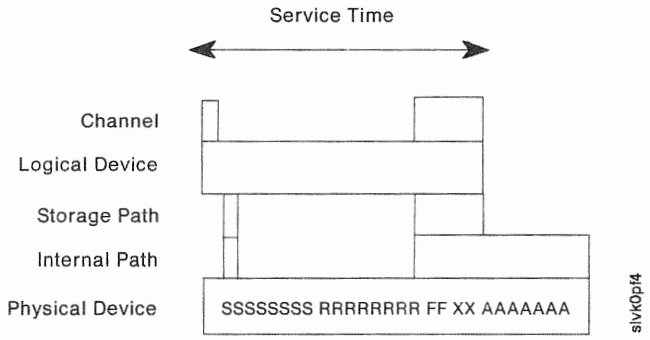

Figure 30. 3990 Model 3 Read Miss, Cache Fast Write Miss, or Front End Miss at Sector Zero

Note: For a read miss, the 3990 Model 3 service time is similar to the service time on a 3990 Model 1 or 2. However, the internal path and device remain busy for some extra time promoting following blocks on the track to the cache.

A front end miss at sector zero shows the same characteristics.

3990 Model 3 Front End Miss Beyond Sector Zero

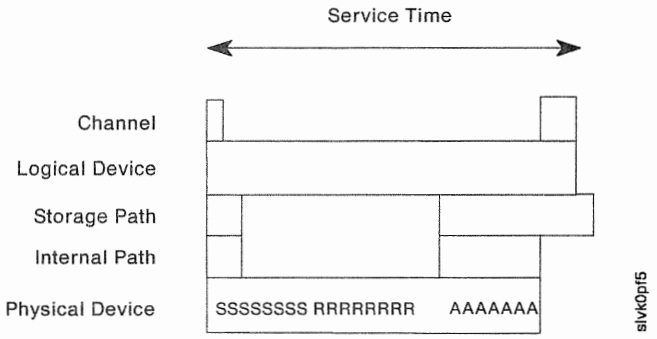

Figure 31. 3990 Model 3 Front End Miss Beyond Sector Zero

Note: The sequence of events is reversed: first the front end of the track is promoted, then the command is processed like a read hit. While data is being transferred from cache to channel, device and internal paths are available for stage and destage of data.

Configuration Conclusions

Understanding the previous discussion can help in configuring a 3990 subsystem. The following conclusions can be drawn for:

Channel Busy: 3990 Model 3s connected to 4.5 megabyte channels will decrease the host channel utilization on those channels compared to the channel utilization experienced on 3 megabyte channels.

If there is a high proportion of read hits or write hits with cache or DASD fast write, a significant increase in channel load can be sustained. This is because the channel program does not have to go to DASD if the data is in the cache and no channel disconnect/reconnect is required. Also, with a high percentage of searches now done in cache, channel connection time is reduced.

Actuator Busy: The major benefit of the 3990 Model 3 is the reduction of mechanical actuator activity. As a result, the average device utilization measured by software such as RMF for a 3990 Model 3 subsystem will normally be far below a 3990 Model 1 or 2 subsystem with an equivalent workload. This means that the volume can sustain higher I/O rates and the significance of data set placement on a device is reduced because much of the seek activity is removed.

Performance Variables

A read hit involves only the transfer of data from cache and takes place at channel speeds. With the same search assumption as in Figure 27 on page 61, reading a 4K block of data from cache would take approximately 2 ms on a 4.5 megabytes per second channel.

Operations requiring access to DASD take place at approximately the same speed, with or without cache. A noncache transfer of a 4K block of data requires approximately 17 ms, ignoring RPS miss. Some basic performance data is given in Figure 32.

3990 Model 3 Operation	3 Megabyte Channel Service Time	4.5 Megabyte Channel Service Time
Read Hit	2.5 ms	2.0 ms
Read Miss	17 ms *	17 ms *
Write (Hit or Miss) without Cache Fast Write	17 ms *	17 ms *
Cache Fast Write Hit	2.5 ms	2.0 ms
DASD Fast Write Hit	3.0 ms	2.5 ms

Figure 32. 3990 Model 3 Service Times

Note: (*) These times assume:

- Average 3380 service time with a 4.0 millisecond seek
- 8.3 millisecond rotational delay with no RPS miss
- Single-record transfer (4096 bytes).

The numbers shown in Figure 32 are rounded to the nearest 1/2 (0.5) millisecond. They represent modelled results for the indicated operations and have not yet been validated in a production environment. **Other environments, configurations, and processors will experience different levels of performance. Accordingly, these figures do not constitute a performance guarantee or warranty. These numbers reflect only part of the performance improvement provided by the 3990 Model 3. The subsystem performance graphs shown in** *IBM 3990 Storage Control Introduction* **demonstrate the performance improvements that are attainable through the improved 3990 internal operations.**

The performance of the 3990 Model 3 should be considered from a subsystem viewpoint. As noted previously, a read operation, a cache fast write operation, and a DASD fast write operation are the only operations for which service time is improved when the track addressed is already in the cache. Assuming these operations are a sufficiently large proportion of all operations carried out on the subsystem, the subsystem performance will be improved.

Read and Write Hit Ratios

Experience has shown that many volumes have very high hit ratios. Typical TSO user data will often have read hit ratios above 90%.

Write hit ratios are often over 95% in IMS or TSO environments.

Chapter 5. Reliability, Availability, and Serviceability

The 3990 introduces several innovations in reliability, availability, and serviceability, including:

- Internal service processors called support facilities
- A service information message (SIM) sense data format
- A SIM alert message for improved error notification
- Concurrent maintenance capability that permits certain 3990 Model 2 and 3 power and service regions to be serviced while other regions continue to operate
- Remote support capabilities including remote diagnostic control and remote microcode patch loading
- Nonvolatile vital product data (VPD) storage for subsystem configuration data in each cluster's support facility.

Support Facility

Each storage cluster contains a support facility. The support facility is a service processor that:

- Provides nonvolatile VPD storage for subsystem configuration data
- Generates the SIM format sense data reported in the service information messages (SIMs)
- Maintains error logs for the storage cluster
- Passes error and status information to the other support facility
- Provides remote support capability
- Runs soft-copy maintenance analysis procedures (MAPs) and diagnostics
- Interacts with the maintenance panel.

Service Information Messages (SIMs) and SIM Alert Messages

SIMs and SIM alert messages are provided by the operating system error recovery procedure (ERP). In the 3990, a service information message (SIM) is SIM-format sense data. The SIM is logged on the support facility diskette. The 3990 sends SIM-format sense data to the operating system to report that certain storage control errors have occurred.

A host error recovery program (ERP) then notifies the operator that a storage control error occurred by displaying a SIM alert message on the operator console. The host ERP also adds the SIM to the error recording data set (ERDS). (Some errors are reported through other sense data formats and cause a host console message to be displayed but do not generate a SIM alert message.)

If a repair action is not completed, the 3990 re-issues the SIM-format sense data eight hours after the first SIM offload and then again eight hours after the second

SIM offload to the host. After the last SIM offload to the host, the SIM-format sense data is marked on the SIM log and the sense data is offloaded to the host for the final time whether a repair action is started or not. If a repair action is started, the support facility marks the SIM log that a repair action has been taken.

SIM Alert Message

Each SIM alert message contains the machine type, serial number, failure severity, and a reference code that identifies the failure.

When a SIM Alert message is displayed, the installation should:

- Record the information in the SIM alert message.
- Run an EREP error exception report that merges the ERDS input from all attached systems in the installation to retrieve the remaining information in the service information message (SIM).
- Review the error exception report to determine when you should schedule a service action to repair the fault.
- Place a service call and report the contents of the SIM alert message.

The person who places the service call should report the information in the SIM alert message. This information determines the replacement parts needed by the service representative to correct the subsystem problem. This reduces the time required for the service action.

Service Information Messages (SIMs)

The SIM format sense data provides more information about the error than the SIM alert message. You should retrieve the expanded error description by running an error exception report using the Environmental Record Editing and Printing (EREP) program or a similar reporting program.

The SIM identifies the affected area of the storage control, what hardware components are affected during the service action, the severity of the failure, and what effect the service action will have on subsystem performance. This information helps you start appropriate recovery procedures so that normal operation can be restored quickly and with minimal disruption, or to make an informed decision to defer maintenance to a later time.

The message light on the operator panel goes on when the SIM is sent to the host and stays on until the repair action is started.

See Chapter 6, "Using the Service Information Messages" on page 77 for more information.

Considerations for Console Message Handlers

Programs that filter and/or route console messages should be reviewed to take into account SIMs and other new messages.

Error Logging

Machine-specific information such as SIM-format sense data, other sense data formats, and the contents of status registers are logged on the support facility diskette. The service representative can analyze the error log data without disrupting subsystem or host system operations.

The error log information is also used by the support facility to generate a reference code for each service information message. The reference code identifies the error that occurred and the parts that are needed to repair the fault.

Cache and NVS Availability

If a cache array error occurs, the storage control automatically takes the affected 16K cache segment offline for servicing later. The cache storage that remains online continues to be available for productive work.

If a cache access error occurs, the storage control performs one of the following actions:

- Fences the failing storage path and continues caching operations.
- Stops all caching for the subsystem and accesses all data directly to and from DASD.

The installation specifies in the 3990 vital product data which action is to be taken when a cache access error occurs. See "Cache Access Error Option—DLSE Mode and DLS Mode (Subsystem Attached to Storage Path 0)" on page 232 for details.

If a failure occurs in the cache control circuits, access to the entire cache storage is disabled. The 3990 performs an emergency destage for DASD fast write data from NVS. Cache fast write data is lost. With the exception of cache fast write data, the data on DASD remains accessible without cache. All dual copy logical volumes are set to suspended duplex mode.

When a failure occurs in the cache directory, the 3990 Model 3 relocates the directory so caching operations can continue without interruption to the application. Any cache fast write data will be lost.

When the support facility detects a fault in the nonvolatile storage, it disables nonvolatile storage operations. DASD fast write operations are terminated. Dual copy operations continue without control information logging but a subsequent error requires a full volume copy. DASD data remains accessible through direct and caching operations.

Concurrent Maintenance Provided by the 3990 Model 2 and 3

The concurrent maintenance provided through the support facility and the separate power and service regions greatly improves the availability of DASD data. For example, one storage cluster can continue productive work while a service representative services the other. Thus, two storage paths remain available to access DASD in DLSE mode, or one path in DLS mode.

Note: The 3990 Model 1 has only one storage cluster and cannot provide this concurrent maintenance capability.

Storage Path and Cluster Concurrent Maintenance Capabilities (3990 Model 2 and 3)

A service representative can service one 3990 Model 2 or 3 storage cluster while normal operations continue through the other cluster. Some faults require the entire machine to repair.

In DLSE mode, a service representative can service one controller in a DASD A-unit while normal operations continue through the remaining three storage paths to the other controllers. The maintenance analysis procedures (MAPs) request the storage control to fence the storage path during the maintenance activity.

Cache and NVS Concurrent Maintenance Capabilities (3990 Model 3)

Cache can be serviced while direct access to DASD is provided through the storage clusters. During the service action, the 3990 suspends all caching operations and sets all duplex pairs to suspended duplex mode.

Nonvolatile storage can be serviced while caching operations and direct access to DASD continue through the storage clusters. Dual copy operations continue without control information logging. A subsequent error requires a full volume copy to synchronize the two volumes in the duplex pair.

Concurrent Maintenance Operations

When a service representative needs to perform maintenance on a subsystem component (for example, a storage cluster or DASD), the usual way is to vary it offline. Before performing a service action, the MAPs will instruct the service representative to ask the operator to vary all paths to the component offline. With the component varied offline, the service representative can repair the fault.

When the service is complete, the MAPs will instruct the service representative to ask the operator to vary the component online.

In DLS mode, varying a cluster or a storage path offline means there is only one remaining storage path transferring data to the DASD.

In DLSE mode, the service representative can request the MAPs to take one storage path offline to perform controller-level maintenance on 3380 Models AJ4 and AK4. The MAPs issue a quiesce request to take the storage path offline. The 3990 fences the storage path to take it offline. The host operator does not have to take any action and the loss of the storage path is transparent to the host system.

With the storage path offline, the service representative can repair the fault while operations continue in the other storage paths. When the service is complete, the MAPs issue a resume request to unfence the storage path and put it back online.

Remote Support

Remote support allows support personnel in a remote support center to establish communication with either storage cluster in a 3990 through an external modem. When the communication link is established, the support personnel can analyze error data and send maintenance information to the on-site service representative.

Microcode patching can be done through a remote support session. This requires significantly less time than delivering a patch diskette or having the service representative key the microcode patch through the 3990 maintenance panel.

The 3990 receives the patch over the remote support interface and writes the patch on the diskette concurrent with normal operations. The service representative can specify whether the patch should be loaded during all subsequent IMLs. The 3990 reloads all the active patches during each subsystem IML.

SIM alert messages are generated when:

- a remote support session is established
- the remote support session ends
- after three unsuccessful attempts to establish a remote support session.

Remote Support Access Code

All remote support sessions are protected by a 3990-generated access code. Having the 3990 generate the access code provides for the integrity of the remote session and prevents unauthorized data links to the 3990. The 3990 can generate a remote support access code through a programmed request or at the request of a service representative, through the MAPs.

Before initiating a remote support session, the on-site service representative or the system operator requests the 3990 to generate an access code. The access code can be used for one remote support session and must be received by the 3990 within one hour of the time the code was generated. The access code is given to the remote support representative who sends the access code to the 3990 to establish the remote support session. When the 3990 receives the access code within one hour of the time the code was generated, the remote support session is established.

If the 3990 receives an invalid access code three consecutive times, the current 3990-generated access code is purged to prevent any further attempts to establish a remote support session and a SIM alert message is generated. The 3990 ends the remote session initiation. Another remote support access code must be generated to initialize a new remote support session.

Remote support access can be disabled anytime by setting the Modem switch on the 3990 operator panel to Disable.

Fencing

The 3990 has added new types of fencing to those done by the 3880.

Types of Fencing by the 3880

- MVS path vary

  This fence is accomplished by MVS ERPs in response to error conditions that prevent successful I/O operations on one channel path to a device, but not on all channel paths. When this condition occurs MVS will use the path vary command to stop using the failing channel path when attempting I/O to that device.

- Storage director

  These fences are taken by the 3880 hardware when a failure in the 3880 prevents it from being able to handle any work from the channels or devices.

- DASD controller

  This type of fence is taken by the 3880 when a controller is failing in such a way that it prevents any useful work on the interface between the 3880 and the devices that the controller attaches. The other controller in the A-unit is still available for access to the attached devices.

- Write inhibit

  This type of fencing is taken by MVS ERPs when the failure reported might cause erroneous data to be written to the device. The purpose of this type of fence is to limit the damage to as few devices as possible. There are three levels of this kind of fence.

  - Write inhibit channel

    The storage control presents unit check status to all write operations through this channel.

  - Write inhibit storage director

    The storage control presents unit check status to all write operations through this storage director.

  - Write inhibit controller

    The storage control presents unit check status to all write operations through this controller.

Types of Fencing by the 3990

The 3990 modifies and enhances the fencing actions of the 3880.

- Fence channel (new)

  When either a non-resettable error or an error threshold exceeded condition occurs, the channel is fenced from that storage path. If the error occurs on both storage paths, the channel will be fenced from the entire storage cluster. This type of fencing occurs in both DLS and DLSE mode.

- Fence storage path (modified)

  This is similar to the fence storage director operation of the 3880, and replaces it. However, there are the following differences:

  - In DLSE mode, there are two storage paths in a storage director, (cluster) so it is much less likely that a fault will cause an entire storage director (cluster) to be fenced.

  - Some errors that would not cause a 3880 or a 3990 storage path in DLS mode to fence will cause a 3990 storage path in DLSE mode to fence if a threshold of these errors is exceeded and the other storage path in the storage director (cluster) is operational.

  - On a 3990 Model 3, some cache errors will cause a storage path to be fenced so that the rest of the storage paths in the subsystem can continue to operate with the cache.

- Fence device from a storage path (new)

  In DLSE mode, a device will be fenced from a storage path if there is an alternate path to the device within the storage director and a threshold of errors that appear to be path-related is exceeded on that device.

Unfencing

Installation Recommendations

Each installation should document the operational procedures for the use of the Restart switch. We recommend you review and modify as appropriate your procedures for unfencing and the use of the Restart switch.

The following section describes operational considerations for the use of the Restart switch.

We recommend you have the service representative review and repair the hardware error first before removing the fence. After appropriate repair action, the procedure to remove a fence varies with the type of fence.

Types of unfencing for 3990s in DLS mode include:

- MVS path vary

  Use the MVS vary command to bring the paths back online.

- DASD controller fence

  The 3990 will also attempt to unfence the controller if one of the actions to unfence the storage path is taken. The controller repair action will unfence the controller.

- Write inhibit

  Use ICKDSF to reset the write inhibit condition.

  The 3990 will also reset the write inhibit condition if one of the actions to unfence a storage path is taken.

  Write inhibit channel will be reset if a system reset is received on that channel.

Types of unfencing for 3990s in DLSE mode include:

- Channel fence

  Do one of the following:

  - Use ICKDSF to unfence the channel.
  - Press the Restart switch for the storage path. This should only be done by authorized personnel who are following procedures approved for that installation.
  - For certain conditions, the service representative may determine that it is appropriate to power the cluster off, then on again to remove the fence.

- Storage path fence

  Do one of the following:

  - Use ICKDSF to unfence the storage path.
  - Press the Restart switch for the storage path. This should only be done by authorized personnel who are following procedures approved for that installation.
  - For certain conditions, the service representative may determine that it is appropriate to power the cluster off, then on again to remove the fence.

- Device Fence

  Do one of the following:

  - Use ICKDSF to unfence the device.
  - Press the Restart switch for the storage path. This should only be done by authorized personnel who are following procedures approved for that installation.
  - For certain conditions, the service representative may determine that it is appropriate to power the cluster off, then on again to remove the fence.

ICKDSF CLEARFENCE Command

When you are using a 3990 Storage Control in DLSE mode, and an error occurs that causes the subsystem to fence off one particular path to a device or group of devices, the subsystem continues to function with the remaining path(s).

Maintenance is required on the failing storage control and/or the failing device to repair the condition that caused the fence.

After the failing unit has been repaired, use the Device Support Facilities CONTROL command with the CLEARFENCE parameter to clear the fenced condition for the path.

The CONTROL command with the CLEARFENCE parameter will clear **all** paths to **all** devices on the subsystem. The specified device can be any device on the subsystem.

All IBM system environments as well as ICKDSF stand-alone version support CONTROL command with the CLEARFENCE parameter.

Clearing a Storage Path Fence Status

The following example shows the job control language and CONTROL command used to reset a fence status. It is assumed the path and/or device which has been fenced off by the subsystem has been repaired. The DD statement identified in the input stream identifies an online DASD volume.

```
//jobname   JOB . . .
//stepname  EXEC PGM=ICKDSF
//SYSPRINT  DD SYSOUT=A
//DDCARD    DD UNIT=3380,DISP=OLD,VOL=SER=ABCDEF
//SYSIN     DD *
 CONTROL CLEARFENCE DDNAME(DDCARD)
/*
```

Clearing a Storage Path Fence Status in a CMS or Stand-Alone Environment

The following example shows the CONTROL command used to reset a fence status. It is assumed the path and/or device which has been fenced off by the subsystem has been repaired.

```
CONTROL CLEARFENCE UNITADDRESS(162)
```

For more information on the CONTROL command, see *Device Support Facilities User's Guide and Reference*.

DEVSERV PATHS Messages (MVS/ESA and MVS/XA)

The DEVSERV PATHS command is used to display the channel path status for a device. Because DEVSERV PATHS is already a lengthy console display, the fence display line will only be included when a fence is detected.

Message IEE459I will include the following indication when one or more storage paths have been fenced:

```
** FENCED xxxxxxxx        XXXXXXXX XXXXXXXX XXXXXXXX XXXXXXXX

where xxxxxxxx = STORAGE PATH | CHANNEL | DEVICE

where XXXXX... = 4 hex bytes of storage path status for each
                 storage path (0,1,2 and 3).
```

The complete description of this message can be found in the *MVS/Extended Architecture Message Library: System Messages Volume 2* or *MVS/ESA Message Library: System Messages Volume 2*.

Storage Path Restart

Installation Recommendations

Each installation should document the operational procedures for the use of the Restart switch. We recommend you review and modify as appropriate your procedures for unfencing and the use of the Restart switch.

The following section describes operational considerations for the use of the Restart switch.

On the operator panel, a Restart switch has been provided for each storage path to restart the storage path during some error recovery actions.

To operate the Restart switch, press and release the Restart switch for the selected storage path.

Observe These Cautions Before You Restart a Storage Path

- A storage path is fenced only when a failure rate exceeds a defined threshold. Do not use a storage path restart operation to unfence unless the failure that originally caused the fence has been repaired.
- Do not restart a storage path unless a recovery action is clearly required. The storage path restart operation will temporarily interrupt activity through that storage path. Channel programs that are active on the restarted storage path will receive errors that will require retry attempts.

- Do not restart the same or another storage path during a storage path restart operation.

  Allow adequate time for the restart action to complete. The storage path restart will usually complete in less than 10 seconds. Exceptions can occur that can cause the restart process within the storage path to require a much longer time. The Storage Path Process and Wait indicators identify the restart operation is complete when their blinking pattern returns to normal for your installation.

- **Disabling a channel interface through the storage path restart switch will reset all operations including all device reserves.**

- Restarting a storage path can also reset device reserve status for a channel interface that will be disabled.

Storage Path Restart Operation

If the storage path is fenced, this switch will cause the storage path to attempt an IML. If the storage path is not fenced, this switch initiates the following sequence:

- Stops the current operation in progress.
- Resets the current operation in progress.
- Resets all hardware checks.
- Initializes all internal processes.
- Records a format 0 message 9 sense record when an active channel program was terminated. Sense byte 4 identifies the storage path.
- Restarts storage path operations.

Software ERPs redrive any interrupted operation.

When to Restart a Storage Path for Recovery

If one of the following conditions exist, the installation may need to restart the storage path to recover:

- At the Operator Panel, the Wait and Process indicators for a storage path are not blinking in a normal pattern and the status of the devices attached to that storage path indicate a problem with that storage path. If the source of the problem is the storage path, the restart operation will clear the condition.
- When a system failure occurs and the 3990 has not yet reported this status, the channel interfaces for that system cannot be disabled. When the interfaces cannot be disabled and devices have been left reserved to the failing system, jobs that require those devices can be delayed in system queues.

  Restarting a storage path will permit a channel interface to be disabled even though status could be pending for that channel. If the 3990 interfaces are disabled and the associated storage paths are restarted, during the restart operation, all status for interfaces that are disabled will be reset.

  Note: Only use this recovery action when it is clearly required because device reserve status for the disabled interfaces is also reset.

Chapter 6. Using the Service Information Messages

A SIM alert message is displayed on the operator's console to notify operators that a 3990 service information message (SIM) has been recorded on the error recording data set (ERDS).

The sequence is:

- When the 3990 detects an abnormal condition, it logs the 3990 SIM format sense data on the diskette and activates the Service Message indicator for the storage cluster that detected the failure.

  Note: SIM format sense data reports only 3990 conditions. DASD conditions are reported through other sense data formats and are not formatted as SIMs.

- When the next I/O operation is started, the 3990 sends SIM format sense data to the host system that started the I/O operation (this may be a different host system than the host that was performing the I/O operation where the SIM occurred).

- A host error recovery procedure (ERP) logs the SIM format sense data in the ERDS and displays the SIM alert message on the operator console.

When a SIM alert message is displayed with a severity other than SERVICE, it is essential that you run an exception report to get the additional information from the ERDS as quickly as possible. The detailed SIM information includes severity of the abnormal condition and impact of the service action to repair the fault. This information will help you determine when to schedule a service action to repair the fault.

See "EREP Report Generation" on page 83 for the procedure on how to request the detailed SIM reports using the Environmental Record Editing and Printing (EREP) program.

Note: The EREP job that you run to produce the exception report should merge the ERDS from all attached systems in your installation. See *EREP User's Guide and Reference* for information on how to merge the ERDS for each system control program.

When a SIM alert message is displayed, record and report the message contents when you place the service call.

MVS and VM SIM Alert Message Formats

The formats of the SIM alert messages depend on the operating environments. See Figure 33 for examples of the formats.

```
IEA480E 0cuu,xxxxx, yyyyy ALERT, MT=mmmmmmm, SER=04aa-ddddddd, REFCODE=nnnn nnnn nnnn
          MVS SIM Alert Message Format

DMKDAD403I  0cuu, xxxxx, yyyyyyy ALERT, MT=mmmmmmm, SER=04aa-ddddddd, REFCODE=nnnn nnnn nnnn
          VM/SP and VM/SP HPO SIM Alert Message Format

HCPERP403I  0cuu, xxxxx, yyyyyyy ALERT, MT=mmmmmmm, SER=04aa-ddddddd, REFCODE=nnnn nnnn nnnn
          VM/XA SIM Alert Message Format
```

Figure 33. SIM Alert Message Format Examples for MVS and VM Environments

MVS and VM SIM Alert Message Fields

The fields of the MVS and VM SIM alert messages include:

SIM Alert Message Fields	Description
0cuu	Identifies the channel/unit address (the I/O address) of the failing storage control.
xxxxx	Identifies the failing component. SCU specifies the fault occurred in the non-cache portion of the storage control. CACHE specifies the fault occurred in the cache or nonvolatile storage portion of the storage control.
yyyyyyy	Identifies the severity of the failure. The severity can be: ACUTE, SERIOUS, MODERATE, or SERVICE. See Figure 35 for descriptions.
MT=mmmmmmm	Identifies the machine type and model number (7 characters maximum).
SER=04aa-ddddddd	Identifies the serial number of the failing unit. The value B'000001' at the beginning of the SER value indicates that the unit is an IBM-manufactured device. aa identifies the plant of manufacture. dd identifies the serial number.
REFCODE=nnnn nnnn nnnn	Identifies a reference code that describes the error and the list of parts the service representative will need to repair the fault. Thus, the reference code helps the service representative to find the cause of the error quickly and repair the fault.

Figure 34. MVS and VM SIM Alert Message Fields

Figure 35 shows the relationship between the failing component and the meaning of the severity field in MVS and VM SIM alert messages.

Failing Component	Severity: SERVICE	Severity: MODERATE	Severity: SERIOUS	Severity: ACUTE
SCU	A service-related fault occurred that does not affect storage path operation.	A storage cluster temporary error threshold has been exceeded, but both storage paths are operational.	A permanent error occurred on one storage path. One storage path remains operational.	A permanent error occurred on both storage paths in this cluster.
CACHE	A cache or nonvolatile storage temporary error threshold has been exceeded, but the storage resource is operational.	A permanent error occurred on 1 of 4 cache or nonvolatile storage access paths.	A permanent error occurred on 2 of 4 cache or nonvolatile storage access paths.	A permanent error disabled cache or nonvolatile storage.

Figure 35. Meaning of the SIM Alert Severity Field by Failing Component

VSE SIM Alert Message Formats

```
      0P64I MAINT REQ            (SCU failure)
or
      0P05I OPER INFO            (Failing unit not identified)
or
      0P60I PATH ERROR           (Failing path taken offline)
or
      0P65I MEDIA ERR SYSxxx = nnn (where xxx is the logical unit
                                    and nnn is the cuu address of
                                    the I/O device)
```

Figure 36. VSE SIM Alert Format

In VSE, each message is accompanied on the console by the 32 SIM sense bytes in hexadecimal character format. The SIM severity is given in sense byte 9 when sense byte 28 contains X'F1' or X'F2'. See *IBM 3990 Storage Control Reference* for a description of the sense bytes.

Establishing SIM Handling Procedures

Important operating-environment-dependent considerations exist for establishing SIM handling procedures at your installation. Understanding these factors will help you to:

- Make best use of the automation capabilities of your operating environment.
- Ensure that you have SIM details available on a timely basis by requesting EREP to format the 'A3' records generated by the SIM.

Note: The 3990 reports each SIM on the I/O operation *following* the operation in which the failure was detected. Thus, we recommend that you merge the ERDS input from all the attached systems in your installation when you run EREP. Refer to *Environmental Record Editing and Printing Program: User's Guide and Reference* for information on how to merge the ERDS input for your installation.

Another way to make sure that you know of all SIM activity is to run and examine merged EREP reports on a regular basis. To check for SIM records, run either the Detail Edit and Summary report, specifying selection of the 'A3' records (as described in "EREP Report Generation" on page 83) or run the System Exception reports and review the informational messages for SIMs alerts.

Under MVS

Under MVS, a SIM alert remains on the host console display until the operator or storage administrator responds to the message. When a SIM alert is displayed, you should run EREP with the ERDS input merged from all attached systems in the installation to obtain details of the failure. The EREP control cards for selecting the 'A3' records generated by the SIM are described in "EREP Report Generation" on page 83. Refer to *Environmental Record Editing and Printing Program: User's Guide and Reference*, for additional instructions on preparing the required JCL.

In the MVS environment, an EREP job submission can be automated. The JCL and control cards for the EREP job can be kept in one of your procedure libraries and invoked by an appropriate command from the operator's console or from a TSO terminal that functions as an extended console. You can also take advantage of the write-to-operator (WTO) exits in JES2 and JES3. In this way, you can be sure that the EREP reports are generated quickly and automatically when a SIM alert occurs. Your role would be simply to examine the output and take the appropriate action for service.

Under VM

Under VM, the operator may not see the SIM alert message because there is no requirement to respond to the message. Thus, the SIM alert could "roll off" the screen before the operator sees it. However, there are several ways to ensure that the installation knows of all SIM occurrences.

VM/SP and VM/SP HPO contain a Programmable Operator Facility that is capable of intercepting messages such as SIM alerts and handling them with preprogrammed actions. Using this facility you could, for example, intercept the SIM alert, start the execution of the merged EREP report request with an exec, and route the SIM alert directly to the storage administrator with a message that the EREP report will be available for examination. The exec should merge the ERDS input from all attached systems in the installation for the EREP run. See the *VM/SP System Programmer's Guide* for further information on the Programmable Operator Facility, *EREP User's Guide and Reference* for instructions on preparing an EREP exec, and "EREP Report Generation" on page 83 for details on the parameters required for selecting the SIM 'A3' records.

Under VSE

Under VSE, there is a substantial risk of missing a SIM alert if you rely on the host console screen. There is no requirement for replying to the message, and SIM alerts, like other informational host console messages, are likely to be replaced by other messages and "roll off" the screen before you see them. Therefore, it is important to run the EREP reports on a regular basis and examine them for SIM occurrences. You should merge the ERDS input from all attached systems in the installation for the EREP run. "EREP Report Generation" on page 83 provides the parameter information for requesting the SIM 'A3' records. See the *EREP User's Guide and Reference* for details on submitting EREP report requests in the VSE environment.

You should also consider using the PRINTLOG utility program to retrieve informational messages selectively from the hard-copy file. This facility allows you to print all messages in a particular category. You can do this periodically, requesting only the ones that were recorded since your last PRINTLOG request. See the *VSE/Advanced Functions Operation* for further information on using the PRINTLOG utility program.

Since requesting either an EREP or a PRINTLOG report is the only reliable way to ensure that you get all the SIMs, you may choose to use EREP to get the formatted detail information as quickly as possible.

You may use the LISTLOG program to place a console display file at the end of a job so that the operator console for that job can be reviewed.

EREP Report Requests

SIMs report 3990 conditions; DASD conditions are reported through other sense data formats and are not formatted as SIMs.

The following examples request SIM Detail Edit reports from the error log (ERDS) rather than from a history file. You should request a Detail Edit report after the SIM alert message is received at the console. See the *EREP User's Guide and Reference* for instructions on constructing report requests and merging ERDS input from all attached systems in the installation.

The following figures illustrate example report requests for three of the operating systems.

```
//STEP1    EXEC   PGM=IFCEREP1,PARM=('TYPE=A',        'Request Detail Edit of A
          'DEV=(3380)','PRINT=PT','ACC=N')            'records and keep in LOGREC
//SERLOG     DD   DSN=SYS1.LOGREC,DISP=OLD            'Input is LOGREC
//DIRECTWK   DD   UNIT=SYSDA,SPACE=(CYL,5,,CONTIG)    'EREP workspace
//EREPPT     DD   SYSOUT=A,DCB=BLKSIZE=133            'Prints a hardcopy report
//TOURIST    DD   SYSOUT=A,DCB=BLKSIZE=133            'Prints a hardcopy report
                                                      '(but could be used to route
                                                      'EREP output to a dataset
                                                      'for online viewing)
//SYSIN      DD   DUMMY                               'SYSIN not needed here
/*
```

To get the Event History report, the EVENT parameter must be coded. Similarly, to get the System Exception report, the SYSEXN parameter must be coded.

For further information, see the EREP User's Guide.

Figure 37. Sample of an MVS Report Request

```
DEF  STOR  1M               'Specify virtual storage size
EXEC CPEREP STEP1 INPUT A   'Contents of file STEP1 INPUT A
                            'are listed here
            TYPE=A          'Select all type A records
            DEV=(3380)      'Part of type A selection, device type is 3380
            PRINT=PT        'Requests Detail Edit print reports
            ACC=N           'Keep the records in LOGREC
```

To get the Event History report, the EVENT parameter must be coded. Similarly, to get the System Exception report, the SYSEXN parameter must be coded.

For further information, see the EREP User's Guide.

Figure 38. Sample of a VM Report Request

```
// EXEC   IFCEREP1,SIZE=AUTO  'Allows up to maximum workspace size
TYPE=A                        'Select all type A records
DEV=(3380)                    'Part of A selection, device type is 3380
PRINT=PT                      'Requests Detail Edit print reports
ACC=N                         'Keep the records in LOGREC
/*
```

To get the Event History report, the EVENT parameter must be coded. Similarly, to get the System Exception report, the SYSEXN parameter must be coded.

For further information, see the EREP User's Guide.

Figure 39. Sample of a VSE Report Request

EREP Report Generation

Under any of the operating systems, you can obtain detail information on SIMs by requesting the Detail Edit Report. In addition, the System Exception Reports summarize SIM activity in the DASD informational messages section.

Detail Edit Reports

The essential parameters for selecting SIM 'A3' records are:

```
DEV=(3380)     'Device type of 3380
TYPE=A         'Select all type A (SIM) records
PRINT=PT       'To request Detail Edit and Summary
```

When constructing your EREP report request, use other parameters according to your installation's conventions. However, we recommend that you do not use DATE and TIME parameters when you request SIM details (the console and EREP time stamps may not be synchronized).

If you choose to use the DATE and TIME parameters, do not use the date and time stamps in the console message as limits when requesting the EREP reports. Use a date and time period long enough to make sure all the ERDS data relating to the SIM alert is reported. Sample control statements for generating these reports in the various operating environments are provided under "EREP Report Requests" on page 81.

When you receive a SIM alert at the console, you can specify a Detail Edit and Summary report that selects only SIM 'A3' records from the LOGREC file. For each 'A3' record that is selected, the SIM sense bytes are formatted and evaluated to provide additional details on the type of error and its effect on system performance. In addition, the entire record, including the 32 SIM sense bytes, are printed in hexadecimal character format. Figure 40 on page 84 provides an example of a SIM record from the Detail Edit and Summary report.

If the SIM sense data has some irregular information in it or if the sense data does not contain a SIM, the EREP program does not format the 32 SIM sense bytes into the usual messages for evaluation. Instead, EREP prints the information as

hexadecimal characters, with byte numbers specified for readability, as shown in Figure 41 on page 84 and Figure 43 on page 85.

```
REPORTING DEVICE:       000840    REPORT: ASYNCHRONOUS                          DAY YEAR
REPORTING DEVICE TYPE:    3380    REPORTING SYSTEM: VS 2 REL.  3  370XA DATE:  112  87
REPORTING PATH:        24-0840                                                HH MM SS.TH
                                                                        TIME: 18 27 43.39

RECORD TYPE:          DASD SIM
DEVICE DEPENDENT DATA
                          SERVICE INFORMATION MESSAGE
                               SERIOUS ALERT  3990-02  S/N 0112-0010114 REFCODE 2600-0000-0000
                               PERMANENT ERROR(S) ON 1 OF 2 STORAGE PATHS FOR SSID 0002
                               REPAIR WILL DISABLE STORAGE PATHS 0 AND 1 FOR 0002

HEX DUMP OF RECORD
HEADER    A3831810  00000000  0087112F  18274339  13221170  30810000
    0018  00000000  00000000  00000000  00000000  00000000  00000000  20240840  80052021
    0038  08000840  D9C1E2F8  F4F00000  00901000  00008FE0  23800000  00000004  22002782
    0058  00022600  05100200  F1000300
```

Figure 40. Example of a Formatted Detail Edit Report

```
REPORTING DEVICE:       000840    REPORT: ASYNCHRONOUS                          DAY YEAR
REPORTING DEVICE TYPE:    3380    REPORTING SYSTEM: VS 2 REL.  3  370XA  DATE:  112  87
REPORTING PATH:        24-0840                                                HH MM SS.TH
                                                                        TIME: 18 27 43.39

RECORD TYPE:          DASD SIM
DEVICE DEPENDENT DATA
 DEVICE DEPENDENT DATA NOT FORMATTED
SYSTEM INFORMATION DATA
BYTE 00 01 02 03 04 05 06 07
     D9 C1 E2 F8 F4 F0 00 00


SUBSYSTEM INFORMATION DATA
BYTE 00 01 02 03 04 05 06 07 08 09 10 11 12 13 14 15
     00 90 10 00 00 00 8F E0 23 80 00 00 00 00 00 04
BYTE 16 17 18 19 20 21 22 23 24 25 26 27 28 29 30 31
     22 00 27 82 00 02 26 00 05 10 02 00 F1 00 03 00


HEX DUMP OF RECORD
HEADER    A3831810  00000000  0087112F  18274339  13221170  30810000
    0018  00000000  00000000  00000000  00000000  00000000  00000000  20240840  80052021
    0038  08000840  D9C1E2F8  F4F00000  00901000  00008FE0  23800000  00000004  22002782
    0058  00022600  05100200  F1000300
```

Figure 41. Example of an Unformatted Detail Edit and Summary Report

System Exception Reports

It is a good idea to run the System Exception Reports as a normal part of your operations. Summary information of SIM activity appears in the DASD informational messages report. Figure 42 on page 85 shows the format of the report. Figure 43 on page 85 shows an unformatted report. The COUNT field under DASD informational messages indicates the number of times a specific SIM is reported.

If the same SIM is reported more than one time, the SIM is listed once and the COUNT field indicates how many times it occurred during the time period specified by the report request. The same SIM can be logged a maximum of three times for SCU type SIMs (noncache-related storage control faults) and CACHE type SIMs (cache-related storage control faults).

Sample control statements to print a System Exception Report are provided under "EREP Report Requests" on page 81. Refer to *EREP User's Guide and Reference* for additional information on requesting the System Exception Reports.

```
DASD INFORMATIONAL MESSAGES                          REPORT DATE 163 87
                                                     PERIOD FROM 112 87
                                                            TO   117 87

PHYSICAL  SYMPTOM
ID         CODE    COUNT            MESSAGE
********************************************************************************
0010111.X  000E       1   SERVICE INFORMATION MESSAGE
                              SERVICE ALERT  3990-02  S/N 0112-0010111 REFCODE 3121-1000-000E
                              PERMANENT ERROR(S) ON 1 OF 4 STORAGE PATHS FOR SSID F500 AND F400
                              REPAIR WILL DISABLE STORAGE PATHS 0 AND 1 FOR F400 AND F500
0010111.X  0011       1   SERVICE INFORMATION MESSAGE
                              SERVICE ALERT  3990-02  S/N 0112-0010111 REFCODE 2600-3000-0011
                              PERMANENT ERROR(S) ON 1 OF 4 STORAGE PATHS FOR SSID F500 AND F400
                              REPAIR WILL DISABLE STORAGE PATHS 2 AND 3 FOR F400 AND F500
0010111.X  0013       1   SERVICE INFORMATION MESSAGE
                              SERVICE ALERT  3990-02  S/N 0112-0010222 REFCODE 2600-2000-0013
                              PERMANENT ERROR(S) ON 1 OF 4 STORAGE PATHS FOR SSID F900
                              REPAIR WILL DISABLE STORAGE PATHS 0 AND 1 FOR F900
```

Figure 42. Example of SIMs in System Exception Informational Messages

```
********* This file contains the presentation of an unformatted ********
********* 'A3' record (SIM) when processed for the System       ********
********* Exception report.  The record is not used for the     ********
********* report.  Instead, it is shown in hex dump format in   ********
********* the TOURIST output file.                              ********
********* The record hex dump is shown following msg IFC228I.   ********
********* It can be recognized by the first two characters = A3 ********

INPUT PARAMETER STRING          ACC=N,HIST=Y,SYSEXN

PARAMETER OPTIONS VALID FOR THIS EXECUTION
   RECORD TYPES(MCH,CCH,OBR,SOFT,IPL,DDR,MIH,EOD,MDR,AX,BX,CX,DX,EX,FX,MODE ALL),SYSTEM EXCEPTION,HISTORY INPUT
   DATE/TIME RANGE - ALL
   TABLE SIZE - 024K,LINE COUNT - 050

IFC228I DASD RECORD THAT RESULTED IN A UNKNOWN PFU FOLLOWS
0 - - - - - - - - - 1 - - - - - - - - - 2 - - - - - - - - - 3 - - - - - - - - - 4 - - - - - - - - - 5 - - - - - - - - - 6 - - - -
A383181000000000087112F18274339132211703081000000000000000000000000000000000000000000000000000000000000020240840800520210800084OD9C1E2F8F4

65- - - - 7 - - - - - - - - - 8 - - - - - - - - - 9 - - - - - - - - - 0 - - - - - - - - - 1 - - - - - - - - - 2 - - - - - - - - -
F000000090100000008FE023800000000000042200278200022600051002OOF1000300
IFC221I NO SHARE CARD
IFC120I     18 RECORDS SAVED FOR SYSEXN
IFC120I        22  RECORDS THAT PASSED FILTERING
```

Figure 43. Example of SIMs in Unformatted System Exception Informational Messages

Chapter 7. Planning the Physical Configuration

This chapter lists the tasks you need to perform or verify in planning the 3990 physical configuration, describes subsystem identifier assignments and storage control addressing, and provides examples of typical configurations. Appendix B, "3990 Configuration Planning Worksheets" on page 189 contains examples of all the permitted configurations. **Other configurations are not supported.**

Pre-Installation Planning Tasks

Copy this page and check off each item on the checklist as the task is completed.

__ 1. Contact the IBM Installation Planning Representative (IPR) to obtain the 3990 electrical and environmental requirements.

__ 2. Identify the physical location and clearance requirements for the subsystem. See *IBM System/360, System/370, and 4300 Processors; I/O Equipment Installation Manual—Physical Planning* for service clearance requirements for your floor loading factor.

__ 3. Plan the physical configuration and fill in a set of Appendix B, "3990 Configuration Planning Worksheets" on page 189 to record the configuration.

__ 4. Use the Appendix B, "3990 Configuration Planning Worksheets" for reference and fill in the Appendix C, "3990 Vital Product Data Worksheets" on page 215.

__ 5. Ensure that an analog telephone line is installed within 50 feet of the 3990.

__ 6. Ensure that the IPR has ordered the required cables, including the blue channel interface cables (cable group number 5460185).

__ 7. Ensure that any feature changes to existing equipment necessary for the 3990 installation have been ordered.

__ 8. Schedule the feature installations, if necessary.

__ 9. Verify the machine arrival dates and that the required programs are scheduled for installation. The minimum program release levels are listed on page 109 for MVS, on page 161 for VM, and on page 177 for VSE.

__ 10. Ensure that all program temporary fixes (PTFs) and program update tapes (PUTs) are scheduled for installation. If you are using 4.5 megabyte per second channels, ensure you have the proper level of Input/Output Configuration Program (IOCP). Contact your IBM Systems Engineer to determine which ones are needed.

__ 11. Define the I/O Generation input or the MVS Configuration Program (MVSCP) input, and the I/O Configuration Program (IOCP) input for the subsystem. See "Defining the I/O Configuration to the Processor in MVS/ESA and MVS/XA" on page 113 or "Defining the I/O Configuration to the Processor in VM" on page 163 for examples.

__ 12. Give copies of Appendix B, "3990 Configuration Planning Worksheets" and Appendix C, "3990 Vital Product Data Worksheets" to the service representative who will install the 3990. The service representative will

enter the subsystem configuration information into the 3990 vital product data storage during the installation.

Channel Interface Cable Requirements and Position Required for 3990 on a Channel Interface

On the same 3990 Model 3, some channel interfaces can operate at 4.5 megabytes per second while other channel interfaces can operate at 3.0 megabytes per second, depending on the processor type. The 3990 Model 3 storage controls operating at 4.5 megabytes per second must be installed ahead of any other control unit on that channel. The 3990 Storage Controls that operate only at 3.0 megabytes per second are not required to be installed ahead of all other storage controls, but it is recommended.

All 3990 Storage Controls must use the blue channel interface cables (cable group number 5460185). The blue channel interface cables have improved skew characteristics and are smaller in diameter than the gray channel interface cables. All storage controls that are installed ahead of a 3990 must also be installed with blue channel interface cables.

Valid Configurations

The only valid configurations for fully configured subsystems are described in Appendix B, "3990 Configuration Planning Worksheets" on page 189. Second strings on those configurations shown may or may not be present.

3990 Single-Frame Configurations

DASD string configurations attached to single-frame 3990s are determined by the subsystem operating mode (DLS or DLSE). Appendix B, "3990 Configuration Planning Worksheets" on page 189 shows the valid subsystem configurations for DLSE and DLS mode. **Other configurations are not supported.**

All 3990 Model 3 subsystems that use dual copy and/or DASD fast write should install pairs of 3990 Model 3s in dual-frame configuration whenever possible. In a single-frame 3990 Model 3, common circuitry exists between the cache and nonvolatile storage. Failure of this circuitry may result in a temporary loss of access to data until the hardware is repaired. The dual-frame configuration eliminates this common circuitry because of the way the cache and nonvolatile storage are cross-configured between the two storage control frames.

3990 Dual-Frame Configurations

Dual-frame configuration is an installation configuration option to increase data availability (dual-frame is not a feature). Installing two storage controls in a dual-frame configuration eliminates all single points of failure that exist within a single frame 3990 configuration. Appendix B, "3990 Configuration Planning Worksheets" on page 189 shows the valid subsystem configurations for DLSE and DLS mode. **Other configurations are not supported.**

In a dual-frame configuration, two storage controls are interconnected. Storage cluster 0 in one frame is interconnected with storage cluster 1 in the other frame. The two pairs of interconnected storage clusters provide the capabilities of two single-frame 3990s with no common circuitry between the two frames.

For dual-frame configurations, you will need two sets of the worksheets, one for each cluster pair. A cluster pair is frame 0, cluster 0 and frame 1, cluster 1. The other pair is frame 1, cluster 0 and frame 0, cluster 1.

Dual-frame configuration is possible only with the 3990 Model 2 or 3. The only limitation is that a 3990 Model 2 attaches only to another 3990 Model 2 and a 3990 Model 3 to another 3990 Model 3. However, the cache storage sizes of the 3990 Model 3s can be different.

A pair of properly configured 3990 Model 3s in a dual-frame configuration with dual copy used on all volumes eliminates all single points of failure which might prevent access to data—from processor channels to storage control, to DASD volume, to record.

Dual-Frame Interconnections

Each logical DASD subsystem attached to a dual-frame configuration must have one storage director in each of the two storage controls.

For dual-frame 3990 Model 3s, storage paths 0 and 1 of storage cluster 0 attach to cache storage in the same storage control; storage paths 2 and 3 of storage cluster 1 attach to cache storage in the other storage control.

The storage path connections to the NVS are the reverse of the cache storage connections. That is, storage paths 0 and 1 of storage cluster 0 attach to the NVS in the other storage control; storage paths 2 and 3 of storage cluster 1 attach to NVS in the same storage control.

Thus, loss of power to one storage control will not cause the loss of both nonvolatile storage and cache storage to any subsystem in the dual-frame configuration. Cross-connecting the cache and the NVS provides protection against a single point of failure that exists in a single-frame 3990 Model 3.

Remote Support Communications Line Requirements

To establish remote support communications, the 3990 requires an installation-supplied analog telephone line within 50 feet.

Remote Power Sequence Time Improvement

All 3990 models return the power sequence complete signal to the host system approximately 12 seconds after receiving a remote power on signal. Installations may want to add the remote power sequence cables from the processor to the 3990 and to the DASD to take advantage of the remote power sequence time improvement. The cable set number is 1178.

Specify the Cache Access Error Option in the Vital Product Data

The cache access error option permits you to specify the action taken by the 3990 if a cache access error occurs on one of the storage paths. Specify one of the following three values in the 3990 vital product data worksheets:

00 = Cache is not installed. Specify this value for 3990 Model 1 and 2.

01 = Stop all caching for the subsystem if a cache access error occurs. All dual copy pairs are set to suspended duplex state. The 3990 Model 3 continues to access DASD directly through the storage paths.

We recommend this option when alternate path capability does not exist for all channel paths and access to DASD on all paths is required to prevent stopping an application.

02 = Fence the failing storage path and continue caching on all remaining storage paths if a cache access error occurs.

We recommend this option when all channel paths have alternate path capability and caching performance is required to maintain system performance levels. For example, for installations that use dual copy, specifying option 02 prevents losing the cache and setting all duplex pairs to suspended duplex mode if a cache access error occurs.

Subsystem Identifiers (SSIDs)

The subsystem identifier (SSID) is a user-assigned value that uniquely identifies each 3990 logical DASD subsystem in the installation. SSIDs are included in each EREP exception report to aid the service representative in identifying failing components.

All storage directors within a 3990 logical DASD subsystem must be assigned the same subsystem identifier (SSID). **SSID values can be from X'0001' to X'00FF'.**

During the 3990 installation, the service representative enters the SSID(s) into vital product data storage and attaches SSID labels on the operator panel under each storage path Restart switch. The SSID labels identify the logical DASD subsystem to which each storage path is assigned. The service representative also attaches SSID labels on each controller operator panel in the DASD A-units. The SSID labels on the DASD operator panels are the last two digits of the SSID assigned to each 3990 storage director. These labels are placed in the same location as the physical ID labels used with the IBM 3880 Storage Control.

Figure 44 summarizes the requirements for assigning SSIDs to each 3990 model and operating mode in representative configurations.

3990 Models	Mode	Number of Logical DASD Subsystems	SSID Requirements
3990 Model 1	DLS	1	Assign one SSID. See "Example SSID Assignments for a 3990 Model 1 in DLS Mode" on page 92 for an example.
3990 Model 2 and 3	DLSE	1	Assign one SSID. The storage control and all attached DASD comprise one logical DASD subsystem. See "Example SSID Assignments for a 3990 Model 2 or 3 in DLSE Mode" on page 93 for an example.

Figure 44 (Part 1 of 2). 3990 SSID Requirements

3990 Models	Mode	Number of Logical DASD Subsystems	SSID Requirements
3990 Model 2 and 3	DLS	2	Assign two sequential SSIDs. We recommend that you assign an even-numbered SSID to the logical DASD subsystem attached to storage directors 0 and 2. See "Example SSID Assignments for a 3990 Model 2 or 3 in DLS Mode" on page 94 for an example.
Dual-frame 3990 Model 2 and 3	DLSE	2	Assign two sequential SSIDs. We recommend that you assign an even-numbered SSID to the logical DASD subsystem attached to frame 0, storage director 0 and frame 1, storage director 1. See "Example SSID Assignments for Dual-Frame 3990 Model 2 or 3 in DLSE Mode" on page 95 for an example.
Dual-frame 3990 Model 2 and 3	DLS	4	Assign four sequential SSIDs. We recommend that you assign an even-numbered SSID to the logical DASD subsystem attached to frame 0, storage director 0 and frame 1, storage director 2. See "Example SSID Assignments for Dual-Frame 3990 Model 2 or 3 in DLS Mode" on page 96 for an example.
Dual-frame 3990 Model 2 and 3	DLS and DLSE	3	Assign three sequential SSIDs. We recommend that you assign an even-numbered SSID to the logical DASD subsystem attached to frame 0, storage director 0 and frame 1, storage director 1. See "Example SSID Assignments for Dual-Frame 3990 Model 2 or 3 in DLSE and DLS Mode" on page 97 for an example.

Figure 44 (Part 2 of 2). 3990 SSID Requirements

Figure 45 on page 92 through Figure 50 on page 97 shows examples of SSID assignments for typical 3990 configurations. Each figure shows:

- Requirements and recommendations for assigning SSIDs
- Examples of SSID assignments for each logical DASD subsystem
- Examples of the operator panel SSID labels for each storage path.

Example SSID Assignments for a 3990 Model 1 in DLS Mode

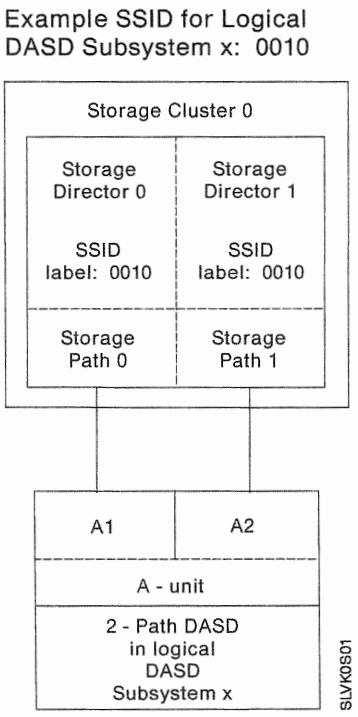

Figure 45. Assigning an SSID for a 3990 Model 1 in DLS Mode

For a 3990 Model 1 in DLS mode, assign one SSID. We recommend an even numbered SSID.

Example SSID Assignments for a 3990 Model 2 or 3 in DLSE Mode

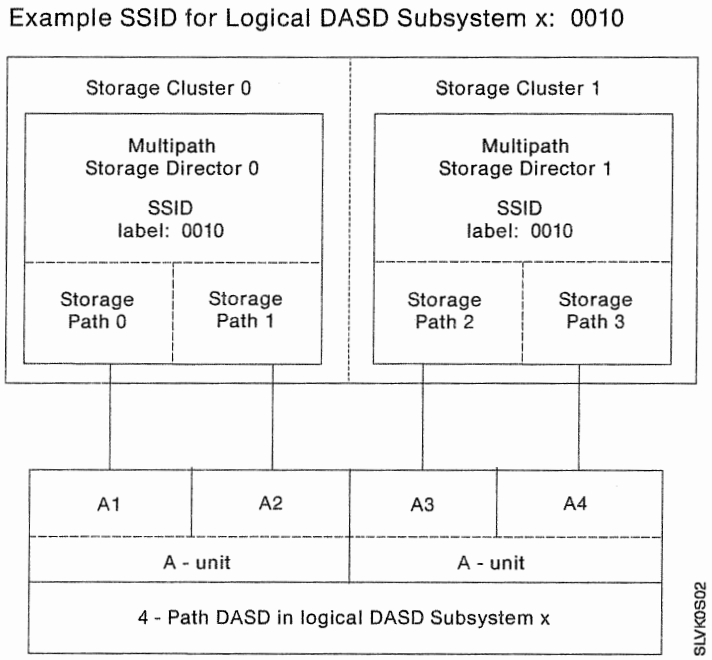

Figure 46. Assigning an SSID for a 3990 Model 2 or 3 in DLSE Mode

For a single-frame 3990 Model 2 or 3 in DLSE mode, assign one SSID.

Note: The SSID assignment is the same when the 3990 attaches strings of 2-path DASD intermixed with a 4-path DASD string. All the DASD strings attached to the 3990 are included in one logical DASD subsystem.

Example SSID Assignments for a 3990 Model 2 or 3 in DLS Mode

Example SSID for Logical DASD Subsystem x: 0010
Example SSID for Logical DASD Subsystem y: 0011

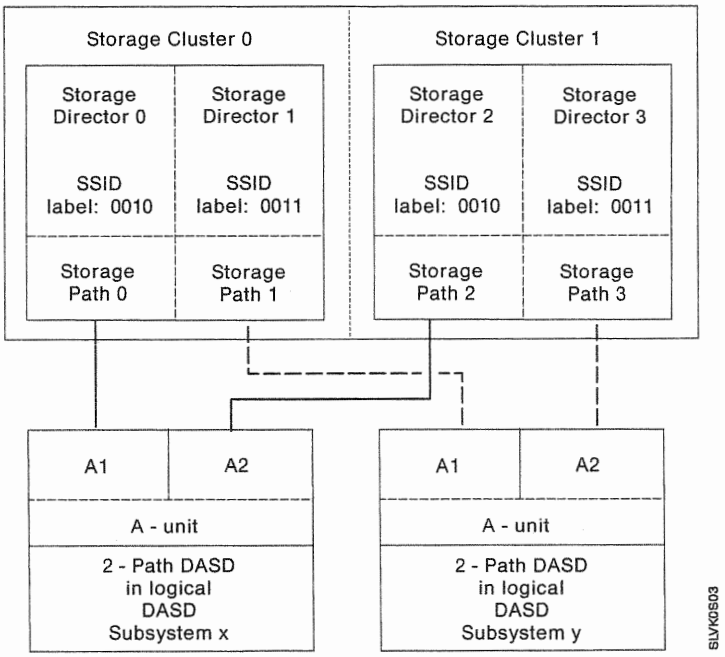

Figure 47. Assigning SSIDs for a 3990 Model 2 or 3 in DLS Mode

For a single-frame 3990 Model 2 or 3 in DLS mode, assign two sequential SSIDs. We recommend that you assign an even numbered SSID to the logical DASD subsystem attached to storage paths 0 and 2.

The SSID for the logical DASD subsystem attached to storage paths 1 and 3 must be one number higher than the SSID for the subsystem attached to storage paths 0 and 2.

Example SSID Assignments for Dual-Frame 3990 Model 2 or 3 in DLSE Mode

Example SSID for Logical DASD Subsystem x: 0010
Example SSID for Logical DASD Subsystem y: 0011

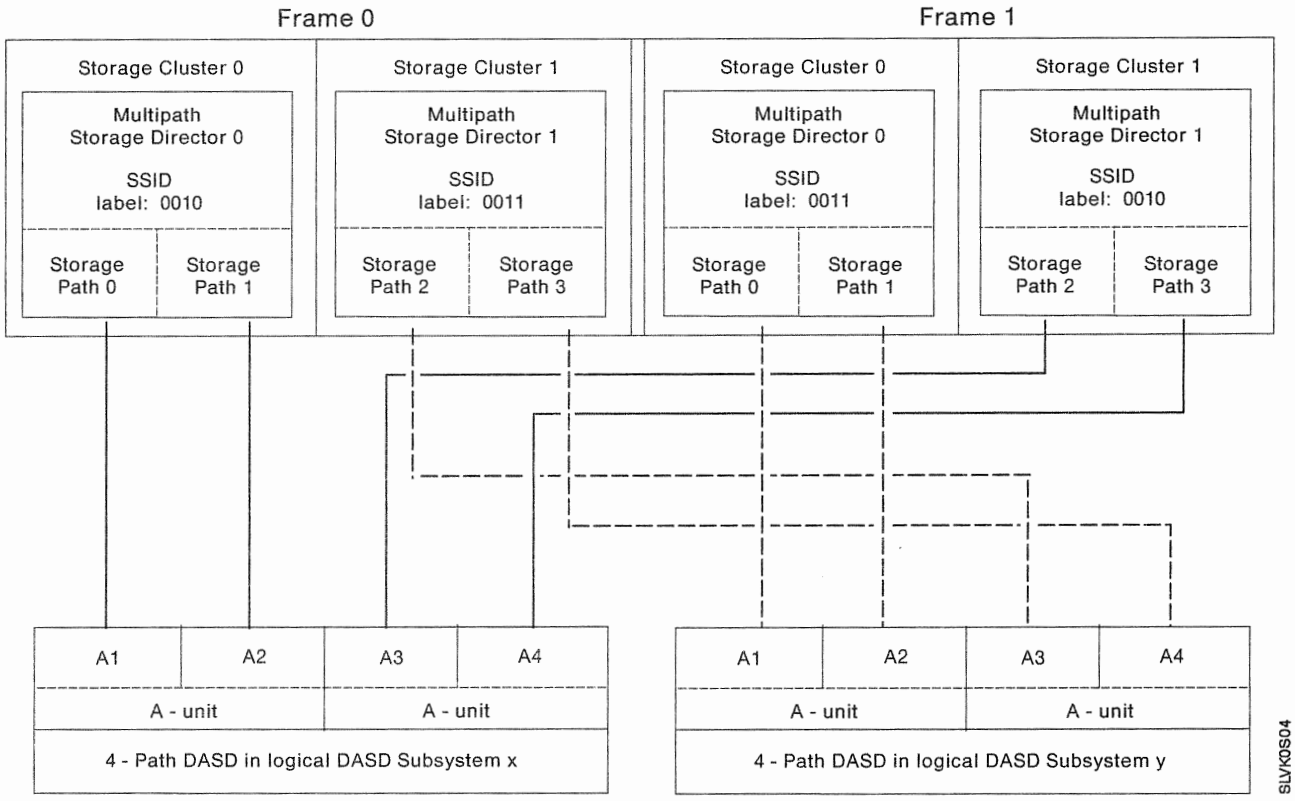

Figure 48. Assigning SSIDs for Dual-Frame 3990 Model 2s or 3s in DLSE Mode

For a dual-frame 3990 Model 2 or 3 in DLSE mode, assign two SSIDs.

We recommend that you assign an even numbered SSID for the logical DASD subsystem attached to frame 0, storage paths 0 and 1 and to frame 1, storage paths 2 and 3.

Assign the next-higher sequential number as the SSID for the logical DASD subsystem attached to frame 0, storage paths 2 and 3 and to frame 1, storage paths 0 and 1.

Notes:

1. The SSID assignment is the same when the 3990 attaches intermixed strings of 2-path and 4-path DASD strings. All the DASD strings attached to each pair of storage directors are included in one logical DASD subsystem.
2. **For dual-frame configurations, you will need two sets of the worksheets, one for each cluster pair.** A cluster pair is frame 0, cluster 0 and frame 1, cluster 1. The other pair is frame 1, cluster 0 and frame 0, cluster 1.

Example SSID Assignments for Dual-Frame 3990 Model 2 or 3 in DLS Mode

Example SSID for Logical DASD Subsystem w: 0010
Example SSID for Logical DASD Subsystem x: 0011
Example SSID for Logical DASD Subsystem y: 0012
Example SSID for Logical DASD Subsystem z: 0013

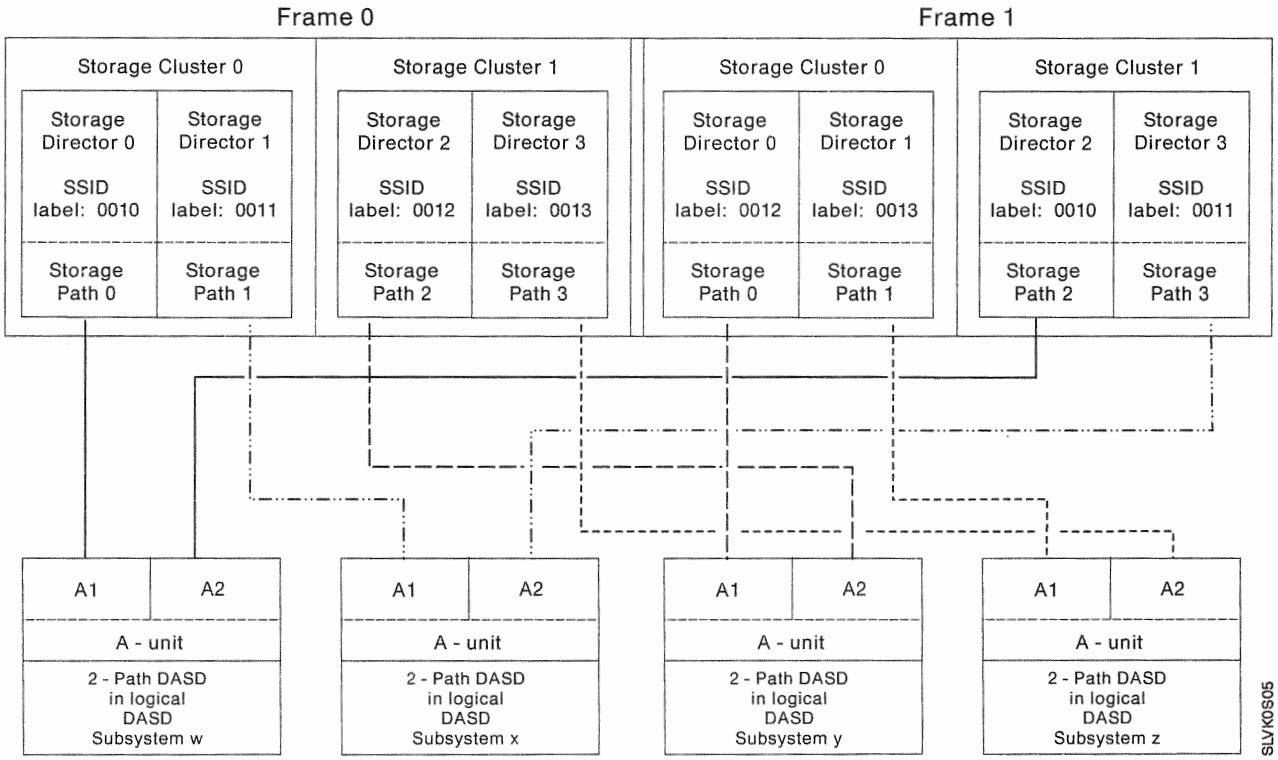

Figure 49. Assigning SSIDs for a Dual-Frame 3990 Model 2 or 3 in DLS Mode

For dual-frame 3990 Model 2s or 3s in DLS mode, assign four sequential SSIDs. We recommend that you assign an even numbered SSID to the logical DASD subsystem attached to frame 0 storage path 0 and frame 1 storage path 2.

The SSID for the logical DASD subsystem attached to frame 0 storage path 1 and frame 1 storage path 3 must be one number higher than the SSID for the subsystem attached to frame 0 storage path 0 and frame 1 storage path 2.

The SSID for the logical DASD subsystem attached to frame 0 storage path 3 and frame 1 storage path 1 must be one number higher than the SSID for the subsystem attached to frame 0 storage path 2 and frame 1 storage path 0.

The SSID for the logical DASD subsystem attached to frame 0 storage path 2 and frame 1, storage path 0 must be one number higher than the SSID for the subsystem attached to frame 0 storage path 1 and frame 1 storage path 3.

Note: For dual-frame configurations, you will need two sets of the worksheets, one for each cluster pair. A cluster pair is frame 0, cluster 0 and frame 1, cluster 1. The other pair is frame 1, cluster 0 and frame 0, cluster 1.

Example SSID Assignments for Dual-Frame 3990 Model 2 or 3 in DLSE and DLS Mode

Example SSID for Logical DASD Subsystem x: 0010
Example SSID for Logical DASD Subsystem y: 0011
Example SSID for Logical DASD Subsystem z: 0012

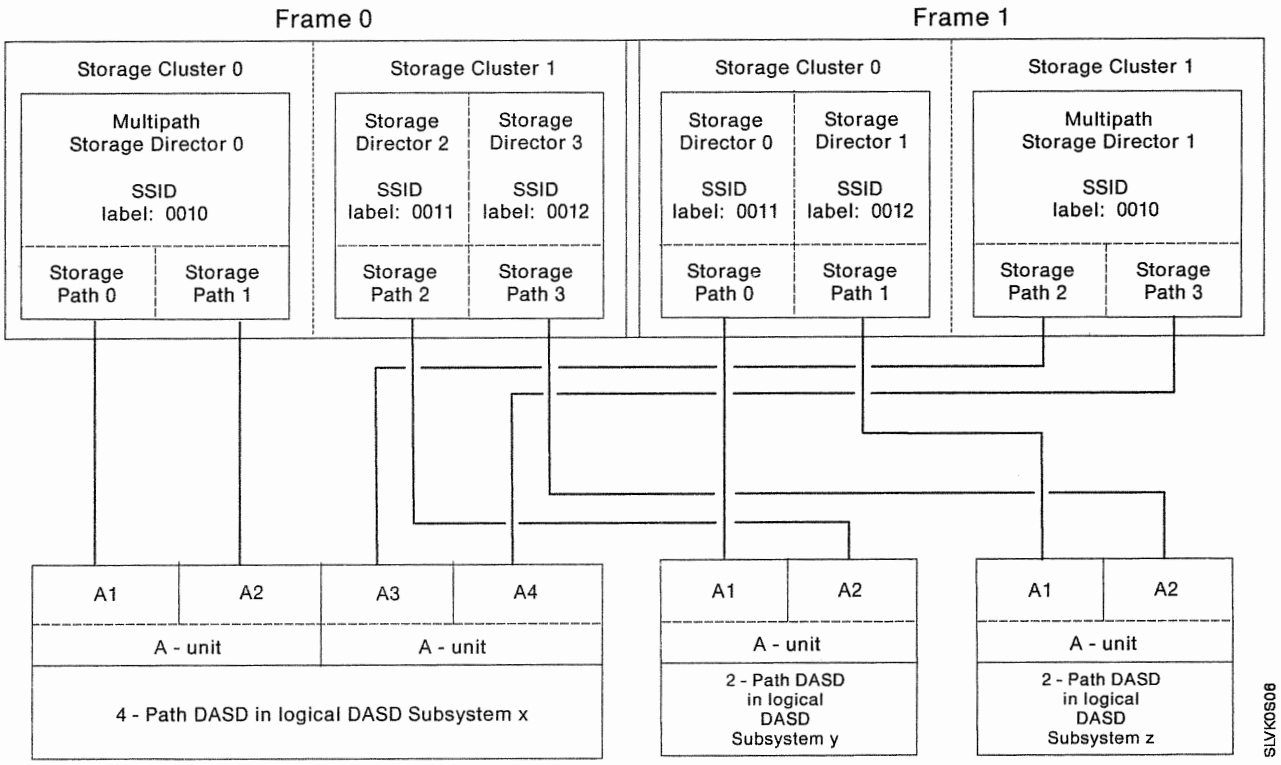

Figure 50. Assigning SSIDs for a Dual-Frame 3990 Model 2 or 3 in DLSE and DLS Mode

For dual-frame 3990 Model 2s or 3s in DLSE and DLS mode, assign three sequential SSIDs. We recommend that you assign an even numbered SSID to the logical DASD subsystem attached to frame 0, storage paths 0 and 1 and frame 1, storage paths 2 and 3.

The SSID for the logical DASD subsystem attached to frame 0 storage path 2 and frame 1 storage path 0 should be one number higher than the SSID for the subsystem attached to frame 0 storage paths 0 and 1 and frame 1 storage paths 2 and 3.

The SSID for the logical DASD subsystem attached to frame 0 storage path 3 and frame 1 storage path 1 should be one number higher than the SSID for the subsystem attached to frame 0 storage path 2 and frame 1 storage path 0.

Note: For dual-frame configurations, you will need two sets of the worksheets, one for each cluster pair. A cluster pair is frame 0, cluster 0 and frame 1, cluster 1. The other pair is frame 1, cluster 0 and frame 0, cluster 1.

Assigning the Number of Addressable Devices for a Logical DASD Subsystem

The number of addressable devices that can be attached to the logical DASD subsystem is determined by the subsystem operating mode. In DLS mode, 8, 16, or 32 devices can be attached. In DLSE mode, 32 or 64 devices can be attached.

Figure 51 describes the values that you can assign in DLSE mode. Figure 52 describes the values that you can assign in DLS mode.

Notes:

1. Use your "planned" number of devices and number of strings rather than the installed number of devices and strings. Otherwise, when you add more DASD, the 3990 will require an IML and you will not be able to take advantage of the nondisruptive install capabilities of 4-path 3380 Models AJ4 and AK4 in DLSE mode.
2. Use the Appendix B, "3990 Configuration Planning Worksheets" on page 189 and the Appendix C, "3990 Vital Product Data Worksheets" on page 215 to assign the number of addressable devices for each logical DASD subsystem.

Value	Description of the Number of Addressable Devices in DLSE Mode
32	Specifies a logical DASD subsystem with a single 4-path string and a maximum of 32 device addresses.
64	Specifies a logical DASD subsystem with two 4-path strings and a maximum of 64 device addresses. Specify this value when 2-path strings are intermixed with a 4-path string.

Figure 51. Number of Addressable Devices in DLSE Mode

Value	Description of the Number of Addressable Devices in DLS Mode
0	Specifies a logical DASD subsystem with no devices attached. This value applies to 3990 Model 2 and 3990 Model 3 only.
8	Specifies a logical DASD subsystem with a single 2-path "short string" and a maximum of 8 device addresses. The 3990 reserves 16 addresses and assigns the lowest eight addresses to the short string. The last eight addresses cannot be used to address other 3380s.
16	Specifies a logical DASD subsystem with a single 2-path string and a maximum of 16 device addresses. You cannot specify two short strings on a subsystem with the value 16.
32	Specifies a logical DASD subsystem with two 2-path strings and a maximum of 32 device addresses.

Figure 52. Number of Addressable Devices in DLS Mode

DASD String Addressing

Each storage path connects to one or two DASD strings. When a host program directs an I/O operation to a DASD device, the string address bit in the I/O address selects the string to which the selected device is attached. See "Assigning Control Unit Addresses for Storage Directors" for the location of the string address bit.

The service representative specifies the string address by setting the string address bit to 0 or 1.

Usually the first string attached to the storage path is string address 0. The second string attached to the storage path is usually string address 1. If two strings are attached to a storage path, the second A-unit attached to a storage path must have a different string address (0 or 1) than the first A-unit.

All controllers in an A-unit must have the same string address (0 or 1).

The significance of controller addressing in planning your subsystem is that, for single strings, the string address determines the storage director's control unit address.

Assigning Control Unit Addresses for Storage Directors

Each storage director in a 3990 requires a control unit address for each channel to which it is attached. When the channel directs an I/O operation to a device attached to a storage director, the channel selects the device by specifying the storage director's control unit address with the device address in the low-order bits of the address.

Figure 53 and Figure 54 on page 100 show the bit layout of the storage director control unit address for 8, 16, 32, and 64 devices on a subsystem.

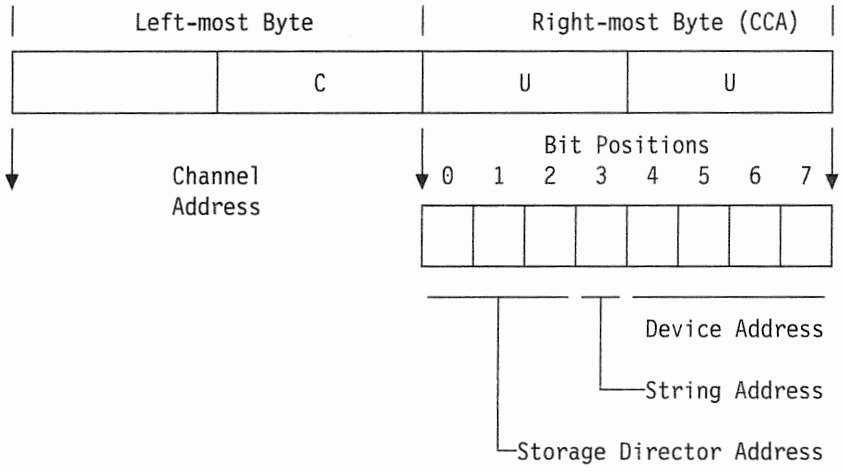

Figure 53. DLS Mode I/O Address Composition for 8, 16, and 32 Devices

Notes:

1. For 8 devices, the storage director's control unit address includes address bit 4.
2. For 8 or 16 devices, the storage director's control unit address includes the string address bit (address bit 3).

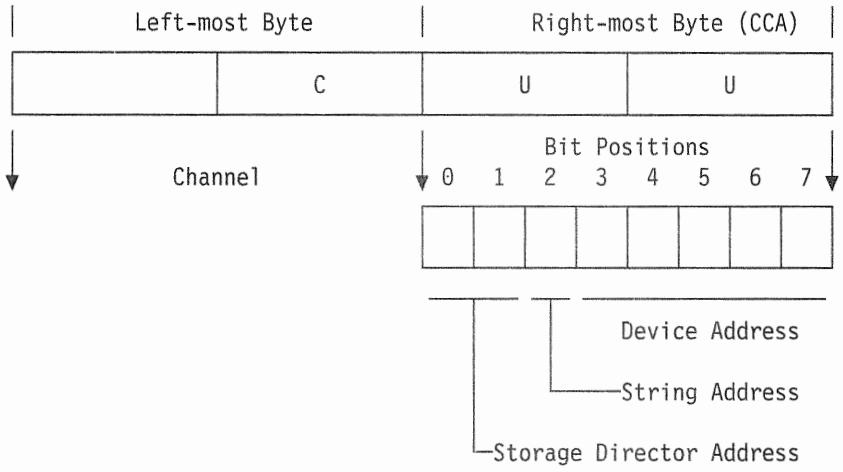

Figure 54. DLSE Mode I/O Address Composition for 32 and 64 Devices

Note: For 32 devices, the storage director's control unit address includes the string address bit (address bit 2).

The following list identifies the valid combinations of number of addressable devices specified for the logical DASD subsystem and storage director's control unit addresses.

Number of Addressable Devices	Control Unit Addresses That You Can Assign For Storage Directors
0	Specifies a logical DASD subsystem with no devices attached. This value applies to 3990 Model 2 and 3990 Model 3 only.
8	Specifies a logical DASD subsystem with a single 2-path "short string" and a maximum of 8 device addresses. If the string is addressed as string address 0, the storage director's control unit address can be: 00, 20, 40, 60, 80, A0, C0, or E0. If the string is addressed as string address 1, the storage director's control unit address can be: 10, 30, 50, 70, 90, B0, D0, or F0. Note that addresses X'x8 - xF' in each of these address ranges are available to address non-3380 devices.
16	Specifies a logical DASD subsystem with a single 2-path string and a maximum of 16 device addresses. You cannot specify two short strings on a subsystem with the value 16. If the string is addressed as string address 0, the storage director's control unit address can be: 00, 20, 40, 60, 80, A0, C0, or E0. If the string is addressed as string address 1, the storage director's control unit address can be: 10, 30, 50, 70, 90, B0, D0, or F0.
32	Specifies a logical DASD subsystem with one 4-path string in DLSE mode or two 2-path strings in DLS mode and a maximum of 32 device addresses. In DLSE mode, if the string is addressed as string address 0, the storage director's control unit address can be: 00, 40, 80, or C0.

In DLSE mode, if the string is addressed as string address 1, the storage director's control unit address can be: 20, 60, A0, or E0.

In DLS mode, the storage director's control unit address can be: 00, 20, 40, 60, 80, A0, C0, or E0.

64 Specifies a logical DASD subsystem with two 4-path strings and a maximum of 64 device addresses.

In DLSE mode, you must specify the value 64 when you intermix 2-path and 4-path DASD strings in the subsystem.

The storage director's control unit address can be: 00, 40, 80, or C0.

Notes:

1. Use a set of the Appendix B, "3990 Configuration Planning Worksheets" on page 189 and the Appendix C, "3990 Vital Product Data Worksheets" on page 215 to assign control unit addresses for each storage director.
2. For the 3990 Model 1, you must assign each channel interface to **one** storage director if you intend to use the attached channel. Unused channel interfaces can be unassigned. You assign a channel interface to a storage director by assigning a control unit address for that storage director on the selected channel interface in the 3990 vital product data.
3. For the 3990 Model 2 and 3, all channels attached to a storage cluster are available to each storage director in the cluster.
4. For a "short string" (8 devices), the 3990 reserves 16 addresses and assigns the lowest eight addresses to the short string. The last eight addresses (X'x8–xF') are not available to address other 3380 devices, but can be used to address non-3380 devices on another control unit.

DASD Configuration Guidelines

A 3990 operates with DASD strings configured in one of three ways:

- 2-path strings of 3380 Models AA4/B04, AD4/BD4, AE4/BE4, AJ4/BJ4, and AK4/BK4
- 4-path strings of 3380 Models AJ4/BJ4 or AK4/BK4
- 2-path strings of 3380 Models AA4/BO4, AD4/BD4, AE4/BE4, intermixed with a 4-path string of 3380 Models AJ4/BJ4 or AK4/BK4.

Use the following guidelines when configuring a subsystem:

- All controllers in an A-unit must have the same string address (0 or 1).
- The second A-unit attached to a storage path must have a different string address (0 or 1) than the first A-unit.
- **For a 2-path string**, the A-unit controllers A1 and A2 must attach to two different storage paths in the subsystem.

  For a 3990 Model 1, attach controllers A1 and A2 to storage paths 0 and 1.

  For a 3990 Model 2 or 3, attach controllers A1 and A2 to storage paths 0 and 2 or to storage paths 1 and 3.
- **For a 4-path string**, controllers A1, A2, A3, and A4 in the A-unit must be attached in ascending order to storage paths 0, 1, 2, and 3.

- **When 2-path strings are intermixed with a 4-path string**, controllers A1 and A2 in each 2-path string must attach to storage paths 0 and 2 or to storage paths 1 and 3, respectively.

  Both 2-path controllers must have the same string address (0 or 1).

  Controllers A1, A2, A3, and A4 in the 4-path string must attach in ascending order to storage paths 0, 1, 2, and 3.

  Note: In a subsystem with 2-path DASD strings intermixed with a 4-path string, the 4-path string reserves 32 of the 64 possible device addresses. The string address (0 or 1) assigned to the 4-path string determines whether the 3990 reserves the low-order 32 device addresses or the high-order 32 device addresses for the 2-path string.

  32 device addresses are available for the 2-path strings. If two 2-path strings are intermixed, all controllers in both 2-path strings must be assigned the same string address (0 or 1). The string address for the 2-path strings must be different than the string address for the 4-path string.

  To provide individual string selection for the 2-path strings, the 3990 assigns device addresses to the 2-path strings as follows:

  The device addresses for a 2-path string attached to storage paths 0 and 2 are the lowest 16 addresses in the range of 32 addresses.

  The device addresses for a 2-path string attached to storage paths 1 and 3 are the highest 16 addresses in the range of 32 addresses.

Assigning Device Addresses for DLSE Mode

The high-order bits in the device address are determined by the storage director control unit address. The low-order bits in the device address include the string address (0 or 1) and the actual device address.

Device address assignments for DLSE mode depend on whether you are assigning addresses for 4-path strings or 2-path strings.

Each 4-path string is comprised of two A-units interconnected to provide access from all storage paths to all devices in the 4-path string. A 4-path string is logically divided into two substrings. The A1 and A2 controllers attach the DASD units in one substring and must attach to storage paths 0 and 1, respectively. The A3 and A4 controllers attach the DASD units in the other substring and must attach to storage paths 2 and 3, respectively.

The devices in the A-unit with the A1 and A2 controllers are assigned the lowest device addresses in the first 16 addresses for the string. The devices in the A- and B-units attached to the A1 and A2 controllers are addressed using the lowest 16 addresses available to the string.

The devices in the A-unit with the A3 and A4 controllers are assigned the lowest device addresses in the second 16 addresses for the string. The devices in the A- and B-units attached to the A3 and A4 controllers are addressed using the second 16 addresses available to the string.

When 2-path strings are intermixed with a 4-path string, each 2-path string is an independent string whose addressing is determined by the storage paths to which it is attached. The A1 and A2 controllers in each 2-path string must attach to storage paths 0 and 2 or 1 and 3, respectively.

When the 2-path string controllers A1 and A2 are attached to storage paths 0 and 2, the devices must be sequentially assigned the lowest 16 of 32 addresses that would be used for a 4-path string with the same string address.

When the 2-path string controllers A1 and A2 are attached to storage paths 1 and 3, the devices must be sequentially assigned the upper 16 of 32 addresses that would be used for a 4-path string with the same string address.

Assigning Device Addresses for DLS Mode

The devices in the A-unit in each 2-path string must have the lowest device address or device number in the device address range for the string and must attach to storage paths 0 and 2 or 1 and 3, respectively. The addresses for the other devices in the string must follow sequentially (no addresses or numbers may be skipped).

If you have fewer than 16 devices on a string, you cannot use the extra device addresses for another 3380 string. For example, if eight 3380 devices are assigned hexadecimal addresses E0 through E7, you cannot assign addresses E8 through EF to other 3380 devices attached to the same storage director or attached, through another storage director or storage control, to the same channel.

Summary of 3990 Addressing Requirements

The following table summarizes the addressing requirements of the 3990.

Mode	Number of Addressable Devices	Valid Storage Control Addresses	Valid String Addresses	Valid Device Addresses *
DLSE	64	00,40,80,CO	0,1	00-3F
DLSE	32	00,40,80,CO	0	00-1F
DLSE	32	20,60,A0,E0	1	00-1F
DLS	32	00,20,40,60,80, A0,CO,E0	0,1	00-1F
DLS	16	00,20,40,60,80, A0,CO,E0	0	0-F
DLS	16	10,30,50,70,90, B0,D0,F0	1	0-F
DLS	8	00,20,40,60,80, A0,C0,E0	0	0-7
DLS	8	10,30,50,70,90, B0,D0,F0	1	0-7

* In DLS mode, this is the last four bits of the address byte.

In DLSE mode with 32 addressable devices, this is the last five bits of the address range.

In DLSE mode with 64 addressable devices, this is the last six bits of the address range.

SLVK0A00

Figure 55. Summary of 3990 Addressing Requirements

These addresses are defined for a logical DASD subsystem. In the case of DLSE mode, select one line for a 3990 machine. In DLS mode, select two address ranges. In DLS mode, it is not necessary for the address ranges for the two logical DASD subsystems to be contiguous, but this is recommended. However, depending on your addressing requirements, one logical DASD subsystem could be for 32 devices, and the other could be for 16 or 8 devices. In DLS mode, the address range for the two logical DASD subsystems must be different and must not overlap.

To use this table, start at the left with either DLSE or DLS configurations. Decide what your number of addressable devices will be. The next column to the right shows the valid Storage Control addresses. Choose the line containing the Storage Control address you need. The next two columns show the valid string addresses and valid device addresses. Use this information in your configuration worksheets, VPD worksheets, and IOCP, MVSCP or IOGEN statements as appropriate.

For example, suppose you want to use a DLSE configuration and have available 32 device addresses starting at X'60' on the channels. The third line in the chart for

DLSE configurations contains Storage Control address X'60'. To the right, the table shows that you must use string address 1 and device addresses 00-1F. DLS configurations are similar.

Reconfiguring a DASD Subsystem

Reconfiguring a DASD subsystem includes:

- Adding DASD B-units to extend the subsystem capacity
- Adding DASD strings to extend the subsystem capacity
- Replacing existing strings with larger capacity DASD
- Changing from 2-path DASD strings to 4-path DASD strings.

Reconfiguring Recommendations

In a 3990 Model 3 data in cache and nonvolatile storage represents data on DASD, however, that data may or may not be destaged to DASD.

For all 3990 models, we recommend that you use the following procedures to avoid data access problems or loss of data.

Failure to destage data when told to do so in the following procedures can cause loss of data.

DLSE Mode—Nondisruptive Installation of a 4-Path DASD String or a B-Unit

Nondisruptive DASD installation capability is available for 3990s in DLSE mode to add a 4-path string or a B-unit in a subsystem with a 4-path string already installed. For a nondisruptive installation of DASD units, tasks 1, 2, 3, and 5 should have been performed before the installation begins. These tasks are listed to ensure they have not been overlooked.

1. Update Appendix C, "3990 Vital Product Data Worksheets" on page 215.
2. Give a copy of the updated Appendix C, "3990 Vital Product Data Worksheets" to the service representative. Ensure the changes are clearly highlighted.
3. Ensure the service representative keys the changed data in vital product data storage.
4. Reconfigure the subsystem one storage path at a time. To add a 4-path DASD string, the service representative:
   a. Uses the 3990 Quiesce/Resume MAPs to fence each storage path instead of varying the channel paths offline to the storage director.
   b. Installs the control interface cables to the associated DASD controller.
   c. Uses the Quiesce/Resume MAP to unfence the storage path.
   d. Repeats these steps until all storage paths are attached to the new string.
5. Evaluate the requirement to run MVSCP or IOGEN and IOCP to redefine the subsystem.

DLS/DLSE Mode with Intermixed 2-Path and 4-Path Strings—Adding a 2-Path String or Adding B-Units to a 2-Path String

This procedure applies to 3990s in DLS mode and to 3990s in DLSE mode with 2-path DASD strings intermixed with a 4-path string. The tasks required for this reconfiguration are listed below.

1. Update Appendix C, "3990 Vital Product Data Worksheets" on page 215.
2. Give a copy of the updated Appendix C, "3990 Vital Product Data Worksheets" to the service representative. Ensure the changes are clearly highlighted.
3. Ensure the service representative keys the changed data in vital product data storage.
4. Reconfigure the subsystem one storage director at a time. When adding a string:
   a. Vary all channel paths offline to each storage director before the service representative connects the control interface cables to the associated DASD controller.
   b. The service representative connects the control interface cables from a storage path to its associated DASD controller.
   c. When the service representative has connected the control interface cables, vary all channel paths online to the storage director.
   d. Repeat these steps until all storage directors are attached to the new string.
5. Evaluate the requirement to run MVSCP or IOGEN and IOCP to redefine the subsystem.

Replacing Existing Strings or Changing 2-Path Strings to 4-Path Strings

This procedure requires varying all channel paths offline to the 3990 before you replace strings or change 2-path strings to 4-path strings. Follow this procedure if you are using a switch to reconfigure DASD strings on the director-to-device connection (DDC) interface.

The tasks required for this reconfiguration follow:

1. Update Appendix C, "3990 Vital Product Data Worksheets" on page 215.
2. Give a copy of the updated Appendix C, "3990 Vital Product Data Worksheets" to the service representative. Ensure the changes are clearly highlighted.
3. Quiesce all application activity on the subsystem.
4. For 3990 Model 3, destage all modified data from cache and nonvolatile storage. Wait for the destage to complete before proceeding.
5. For 3990 Model 3, set all dual copy volumes to simplex mode.
6. For 3990 Model 3, make cache storage and nonvolatile storage unavailable to the subsystem.
7. Vary all channel paths offline to the 3990.
8. If the reconfiguration will affect the control interface cables to one or more A-units, ask the service representative to run the Machine Checkout MAP to ensure error-free machine operation.

9. Ensure the service representative keys the changed data in vital product data storage.
10. Reconfigure the subsystem.
11. If the reconfiguration affected the control interface cables to one or more A-units, ask the service representative to run the Machine Checkout MAP to ensure error-free machine operation.
12. Evaluate the requirement to run MVSCP or IOGEN and IOCP to redefine the subsystem.

Chapter 8. Installing Under MVS

The 3990 runs under MVS/ESA, MVS/XA, and MVS/370, in caching and noncaching modes. MVS/ESA and MVS/XA support the 3990 extended functions DASD fast write, dual copy, and provides IDCAMS support for subsystem cache fast write. With MVS, an appropriate level of Data Facility Product (MVS/DFP) is also required.

Minimum MVS Program Levels for 3990 Basic Operations

The minimum release level of MVS programs, **with the appropriate PTFs**, required to support 3990 basic operations is:

- MVS/ESA
  - MVS/System Product Version 3 Release 1.0
  - MVS/XA Data Facility Product (MVS/DFP) Version 3 Release 1.0
  - Data Facility Data Set Services (DFDSS) Version 2 Release 4
  - Device Support Facility (ICKDSF) Release 9.0 with PTF UY90143
  - DFSORT Release 9.0
  - EREP Version 3 Release 3.2.
- MVS/XA
  - MVS/System Product Version 2 Release 1.2
  - MVS/XA Data Facility Product (DFP/XA) Version 2 Release 2.3 or Version 1 Release 1.3
  - Data Facility Data Set Services (DFDSS) Version 2 Release 2.0
  - Device Support Facility (ICKDSF) Release 9.0
  - DFSORT Release 9.0
  - EREP Version 3 Release 3.2.
- MVS/370
  - MVS/System Product Version 1 Release 3.5
  - MVS/370 Data Facility Product Version 1 Release 1.2
  - Data Facility Data Set Services Version 2 Release 2.0
  - Device Support Facility (ICKDSF) Release 9.0
  - DFSORT Release 9.0
  - EREP Version 3 Release 3.2.

This support includes:

- Service information message (SIM) processing

  When a SIM is issued by the storage control, a SIM Alert message is issued to the host operator's console and the information is written to SYS1.LOGREC.

- IDCAMS support for remote support

  The IDCAMS LISTDATA ACCESSCODE command provides an access code to permit a remote support session to be established. This support is available for all models of the 3990 and for the 3380 Model CJ2. The LISTDATA ACCESSCODE command is protected from unauthorized use by System Authorization Facility (SAF) checking. RACF alter authority to the volume in the DASDVOL resource class is required to use the command.

- Reset Event

  Software recognizes the resetting of DASD devices attached to a 3990 and responds by rebuilding the dynamic pathing arrays, rather than rebuilding them as part of error recovery.

MVS/ESA and MVS/XA Software Capabilities for 3990 Model 3 Extended Functions

The software support for extended function operations will be provided by MVS/ESA and MVS/XA environments. This support includes:

- IDCAMS support of NVS, DASD fast write, cache fast write, and dual copy

  Parameters will be added to the IDCAMS SETCACHE command to enable/disable the DASD fast write, cache fast write, and NVS, and to manage the dual copy capabilities.

- TSO execution of IDCAMS LISTDATA and SETCACHE commands

  LISTDATA and SETCACHE commands can be invoked as TSO commands in addition to being submitted as batch jobs. The normal TSO help functions will be available for these commands.

- DEVSERV

  The operator command Device Services (DEVSERV) has been modified to add information on caching status of volumes. This will include information about DASD fast write and dual copy for volumes attached to a 3990 Model 3 Storage Control.

- ISMF support for subsystem status display

  ISMF Volume Application supports caching subsystems by recognizing a subsystem identifier and using that identifier to select volumes for the volume list. In addition, caching status, DASD fast write status, dual copy status, and subsystem identifier will be provided for each volume in the volume list.

- SAF authorization

  IDCAMS commands will use the System Authorization Facility to restrict invocation of certain commands to only authorized users if RACF or a user routine is available. All IDCAMS SETCACHE functions as well as LISTDATA ACCESSCODE will check user authorization. This authorization checking is performed for all SETCACHE functions whether directed at 3880 or 3990 storage controls.

- SMF Type 22 records

  System Management Facility will include records to indicate changes in the status of the 3990 Model 3 and attached devices. At each change of subsystem or device status, such as setting caching on or off or enabling DASD fast write, MVS will create an SMF Type 22 record. These records can be used to build an audit trail of all device/subsystem status changes.

Supported Channel Commands and Data Formats

The command set of the 3990 supports the count, key, and data (CKD) data format, and the CKD and extended count, key, and data (ECKD) command sets used for 3380 disk storage operations. The command sets are described in *IBM 3990 Storage Control Reference*.

Migrating to 3990

When you migrate to a 3990, programs that refer to data on 3380 devices should run without modification. However, there are some exceptions:

- Programs that depend on device characteristics may require change.
- Programs that depend on 24 sense bytes may require change because the 3990 presents 32 bytes of sense data. See *IBM 3990 Storage Control Reference* for details.
- When moving to 3380 K models, programs that depend on volume capacity may require change due to the additional number of cylinders.
- All user-written programs that check feature bits in DCEMODEL will require a change to recognize 3990.
- The format of the data returned by a 3990 Model 3 in response to the Read Device Characteristics and Sense Subsystem Status commands is different from the 3880 Model 23 format. The status and performance statistics are maintained for the subsystem and are reported by SSID. The storage director identifier (SDID) is no longer provided.
- The Sense Subsystem Counts command is not part of the 3990 command set. Any user-written programs using this command must be changed to read and process the cache performance statistics for a 3990 Model 3. The Perform Subsystem Function and Read Subsystem Data commands are used to report the performance statistics for a 3990 Model 3.
- The IDCAMS command LISTDATA ACCESSCODE checks for System Authorization Facility (SAF) authorization.
- Each command chain must include a command that specifies a CCHH before a Seek Head command or any command requiring track data access. Commands that specify a CCHH are Seek, Seek Cylinder, Locate Record, Recalibrate, and Read IPL.
- Alternate tracks must be located in the alternate track area specified for each DASD type.

Access Codes

The access code is used to authorize a remote support location to access a 3990 support facility for 3990 problem determination and error information and microcode patching. The access code is generated when the systems programmer issues LISTDATA ACCESSCODE to any 3990 model. The function is protected through System Authorization Facility.

The access code is given to the service representative, who provides it to the remote location. The remote location sends the access code to the 3990 as part of the remote access procedure.

Note: The access code is valid for establishing one remote support session and must be received by the 3990 within one hour after the code was generated.

The following example shows how to submit the LISTDATA ACCESSCODE command and the resulting output. See "LISTDATA (Basic Function)" on page 143 for the full description of the command syntax.

```
//LISTDAT1  JOB   ...
//STEP1     EXEC  PGM=IDCAMS
//LISTVOL1  DD    UNIT=3380,VOL=SER=VOL123,DISP=SHR
//SYSPRINT  DD    SYSOUT=A
//SYSIN     DD    *
  LISTDATA-
   ACCESSCODE-
   FILE(LISTVOL1)
/*
```

The output generated by the example LISTDATA ACCESSCODE command includes:

- One IDC01557I message is written to the operator console for each storage cluster in the 3990 which generates an access code. For a storage cluster to generate an access code, the MODEM ENABLE/DISABLE switch on that storage cluster must be in the ENABLE position.
- Job log entries for the job and the messages (not shown)
- SYSPRINT output for the job.

The example console message format is:

```
IDC01557I ACCESS CODE FOR SCU X'046A000021' SC X'00' IS X'38A92201'
IDC01557I ACCESS CODE FOR SCU X'046A000021' SC X'01' IS X'3EB4FFBB'
```

The example IDCAMS SYSPRINT output is:

```
IDCAMS  SYSTEM SERVICES                                  TIME: 13:28:09        06/17/87

      LISTDATA UNIT(3380) VOL(VOL123) ACCESSCODE
IDC0001I FUNCTION COMPLETED, HIGHEST CONDITION CODE WAS 0

IDC0002I IDCAMS PROCESSING COMPLETE. MAXIMUM CONDITION CODE WAS 0
```

Overriding the Default Caching Mode for EXCP, SAM, ISAM, AND DAM

Occasionally there may be need to override the default caching modes for a particular program. An exit routine in the standard execute channel program (EXCP) driver may be used to modify the caching mode for EXCP, sequential access method (SAM), indexed sequential access method (ISAM), and direct access method (DAM).

This exit routine in the standard EXCP driver (not the EXCPVR driver) sets the caching mode for EXCP, and for other access methods that internally use EXCP. This exit will take a global attributes byte from the data extend block (DEB)

extension, if marked as valid, and place it in a Define Extent command chained in front of your channel program. The global attributes byte is at offset X'29' of the DEB extension. Offset X'28' of the DEB extension must be set to X'40' if the attribute byte is valid. For details of the bit settings, refer to the Define Extent command description in *IBM 3990 Storage Control Reference*.

Note: The DEB resides in protected virtual storage. The DEB may be updated by means of a user-written supervisor call (SVC) routine, or directly if the program is authorized through the authorized program facility (APF). This technique may also be used for SAM, ISAM, and DAM related access methods if any other than the standard caching mode settings are required. It cannot be used if WRITECHECK (OPTCD=W) is specified, because in this case the access method will force bypass cache mode.

Defining the I/O Configuration to the Processor in MVS/ESA and MVS/XA

For System/370 extended architecture processors (the 308X or 3090 in any mode, or the 4381 in extended architecture mode), you must run the I/O Configuration Program (IOCP) to define the I/O configuration and the channel speed to the processor if you are adding new devices or changing hardware configurations.

Invoke the IOCP to generate a new input/output configuration data set.

Note: To take advantage of the nondisruptive install capabilities of the 3380 Enhanced Subsystem Models, you must pre-define addresses for the devices that you plan to install.

MVS IOCP Examples

DLSE Mode

In DLSE mode, the two storage paths in a cluster operate as a multipath storage director. To the host operating system **AND** to the channel subsystem, this cluster appears to be a storage director, with a single address. In other words, to the channel subsystem, a multipath storage director looks just like a 3880 storage director. The fact that there are two storage paths within the multipath storage director is transparent to the operating system and the channel subsystem. The microcode in the 3990 selects which of the two storage paths completes a given I/O operation. A Control Unit Busy condition is returned to the host **ONLY** when both storage paths within the multipath storage director are busy. When at least two channels are attached to each multipath storage director, four data transfer operations can concurrently take place within the attached four-path strings of DASD.

A DLSE mode subsystem can be described with one, two, or four CNTLUNIT macros. We recommend two, one for each multipath storage director. There is no advantage to four, and conceivably in certain cases it could cause additional overhead. The order of path selection is affected by the number of CNTLUNIT macros that are used. If two are used, the channel subsystem alternates between the two storage directors, but if both are busy, the channel subsystem will try the second path on the first storage director and then if necessary the second path on the second storage director.

DLS Mode

IOCP, MVSCP, and IOGEN, are exactly the same as they are for 3880s. For addressing and channel accesses, a 3990 single path storage director is functionally equivalent to a 3880 storage director.

A 3990 Model 1 is described exactly the same as a single frame 3880 Model 3.

A 3990 Model 2 or Model 3 is described exactly as a cross-configured pair of 3880 Model 3s (or a dual-framed pair of 3880 Model 23s).

Note: It is possible to gen a 3880 Storage Control with one or two CNTLUNIT macros; we recommend two. Also, each logical DASD subsystem in a DLS mode 3990 can be described with one or two CNTLUNIT macros; we recommend two.

IOCP Examples

The IOCP examples following are arranged in this order:

1. MVS/XA DLSE
2. MVS/XA DLS
3. MVS/370 DLSE
4. MVS/370 DLS

Note: The MVS/XA configurations and IOCPs are also valid for MVS/ESA and VM/XA.

The following set of configurations and IOCP examples illustrate some of the many possible 3990 configurations. Possible variations include DLSE/DLS mode, XA or S/370, partitioned processors or single image systems, multiprocessors or uniprocessors (S/370), and number of channels attached. The 3990 Model 1 examples have not been included; they are identical to single frame 3880 configurations and IOCPs. The 3990 Model 2 and Model 3 configurations shown are representative configurations.

The physical cabling from the 3990 to the DASD A-units must adhere to the diagrams contained in Appendix B, "3990 Configuration Planning Worksheets" on page 189.

In DLS mode, the two single path storage directors in one cluster may attach to the same or different channels. In the 3990 in DLS mode, the connection of a single path storage director to a channel interface is defined in the Vital Product Data, and not accomplished with a cable as in the case of the 3880 (see Figure 58 on page 117).

The address ranges for the two DLS logical DASD subsystems in one 3990 Model 2 or 3 need not be contiguous and cannot overlap.

Note: All of the examples shown describe ONLY the IOCP statements required. For MVS systems, it is possible to build a combined IOCP/MVSCP/IOGEN deck. By specifying a parameter on the EXEC statement, the non-IOCP statements will be ignored. The examples are described this way to avoid any confusion as to what statements were correct for an IOCP.

The MVS/370 examples would require some additional parameters to be valid for an IOGEN, for example ALTCTL or OPCHAN. Check your appropriate IOCP and IOGEN references for details.

MVS/XA DLSE IOCP Example

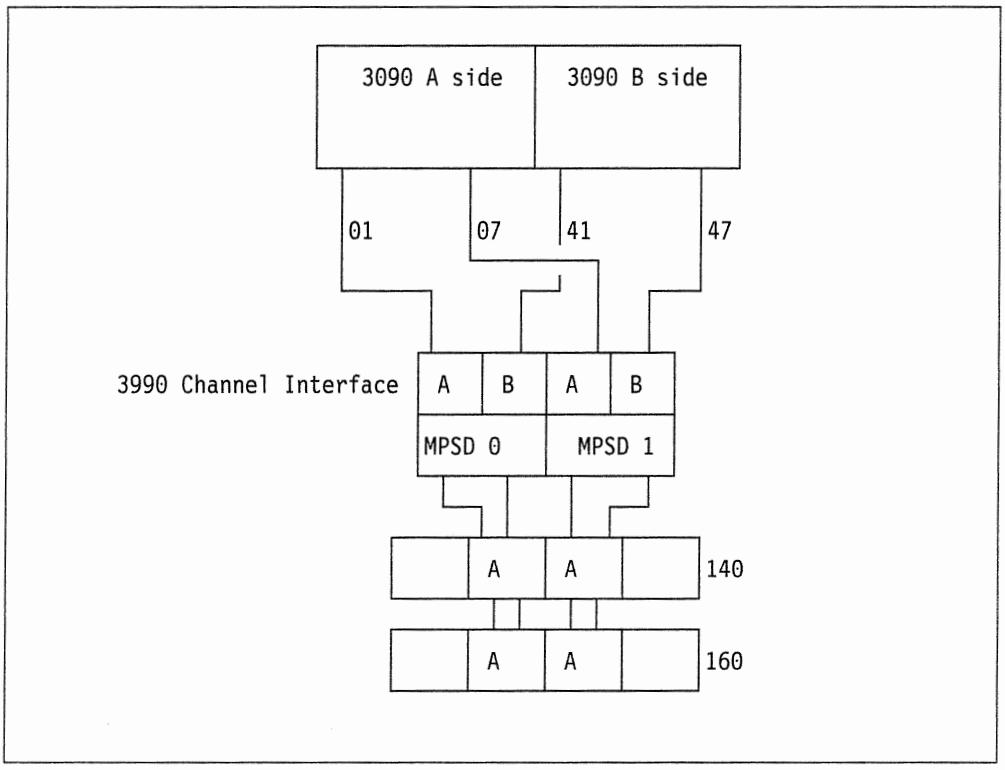

Figure 56. MVS/XA, DLSE, 4 Channel Paths, 3090-400

The IOCP for this configuration:

```
CHPID01 CHPID PATH=(01,07,41,47),TYPE=BL
MPSD0 CNTLUNIT CUNUMBR=008,PATH=(01,41),PROTOCL=S4,SHARED=N,
        UNIT=3990,UNITADD=((40,64))
MPSD1 CNTLUNIT CUNUMBR=009,PATH=(07,47),PROTOCL=S4,
        SHARED=N,UNIT=3990,UNITADD=((40,64))
DLSEDASD IODEVICE ADDRESS=(140,64),CUNUMBR=(008,009),
          UNIT=3380
```

MVS/XA DLS IOCP Examples

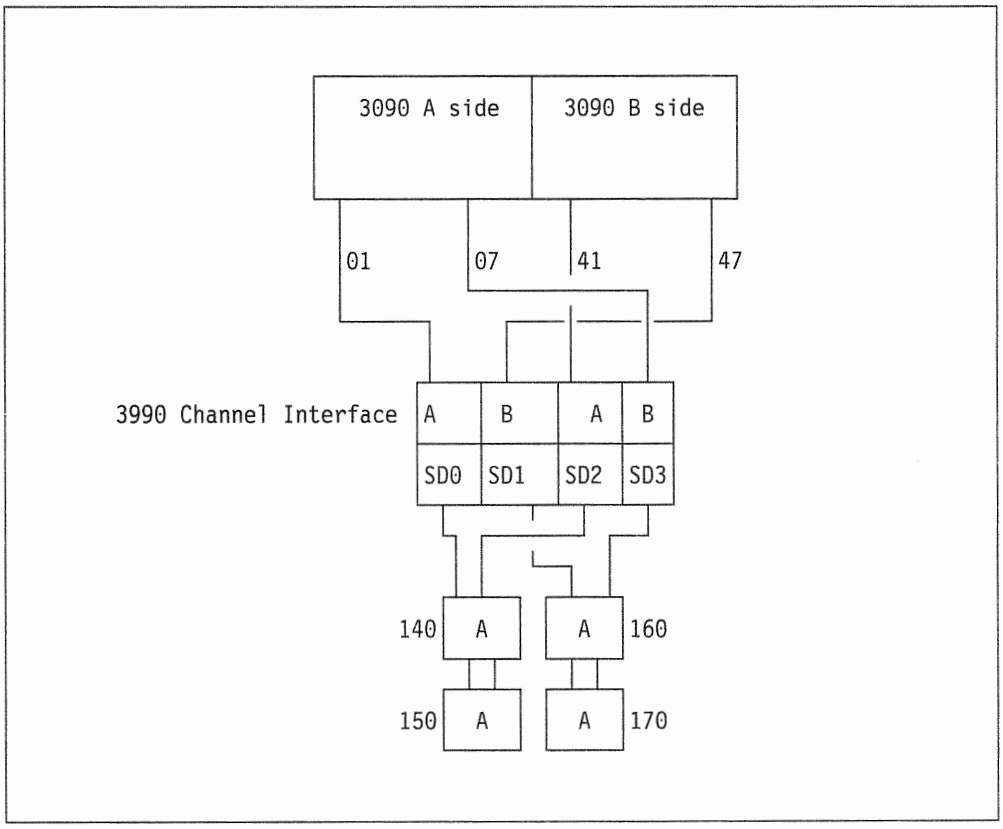

Figure 57. MVS/XA, DLS, 4 Channel Paths, 3090-400 Two Channel Paths To Each Logical DASD Subsystem

The IOCP for this configuration:

```
CHPID01 CHPID PATH=(01,07,41,47),TYPE=BL
SPSD0 CNTLUNIT CUNUMBR=002,PATH=(01),PROTOCL=S4,SHARED=N,
        UNIT=3990,UNITADD=((40,32))
SPSD2 CNTLUNIT CUNUMBR=004,PATH=(41),PROTOCL=S4,
        SHARED=N,UNIT=3990,UNITADD=((40,32))
DLSDASD1 IODEVICE ADDRESS=(140,32),CUNUMBR=(002,004),
          UNIT=3380
SPSD1 CNTLUNIT CUNUMBR=003,PATH=(47),PROTOCL=S4,SHARED=N,
        UNIT=3990,UNITADD=((60,32))
SPSD3 CNTLUNIT CUNUMBR=005,PATH=(07),PROTOCL=S4,
        SHARED=N,UNIT=3990,UNITADD=((60,32))
DLSDASD2 IODEVICE ADDRESS=(160,32),CUNUMBR=(003,005),
          UNIT=3380
```

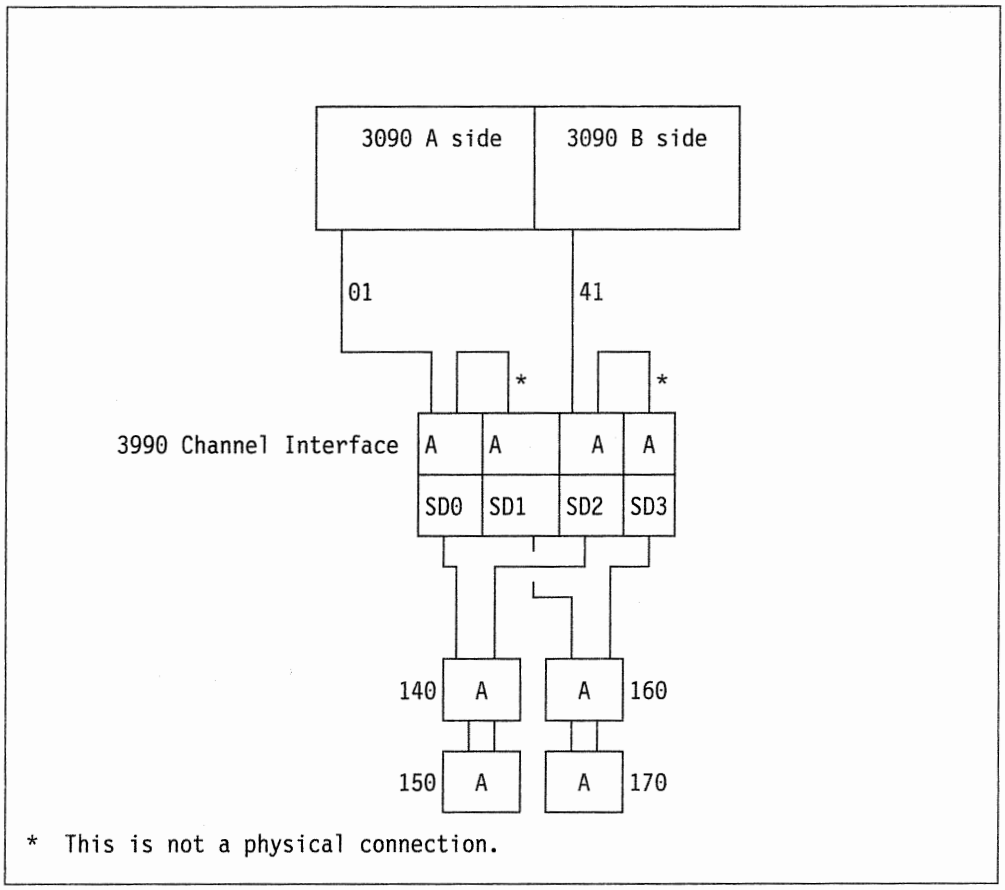

Figure 58. MVS/XA, DLS, 2 Channel Paths, 3090-400 Two Channel Paths To Each Logical DASD Subsystem

The IOCP for this configuration:

```
CHPID01 CHPID PATH=(01,41),TYPE=BL
SPSD0 CNTLUNIT CUNUMBR=007,PATH=(01),PROTOCL=S4,SHARED=N,
        UNIT=3990,UNITADD=((40,32))
SPSD2 CNTLUNIT CUNUMBR=009,PATH=(41),PROTOCL=S4,
        SHARED=N,UNIT=3990,UNITADD=((40,32))
DLSDASD1 IODEVICE ADDRESS=(140,32),CUNUMBR=(007,009),
          UNIT=3380
SPSD1 CNTLUNIT CUNUMBR=008,PATH=(01),PROTOCL=S4,SHARED=N,
        UNIT=3990,UNITADD=((60,32))
SPSD3 CNTLUNIT CUNUMBR=010,PATH=(41),PROTOCL=S4,
        SHARED=N,UNIT=3990,UNITADD=((60,32))
DLSDASD2 IODEVICE ADDRESS=(160,32),CUNUMBR=(008,010),
          UNIT=3380
```

MVS/370 DLSE IOCP Example

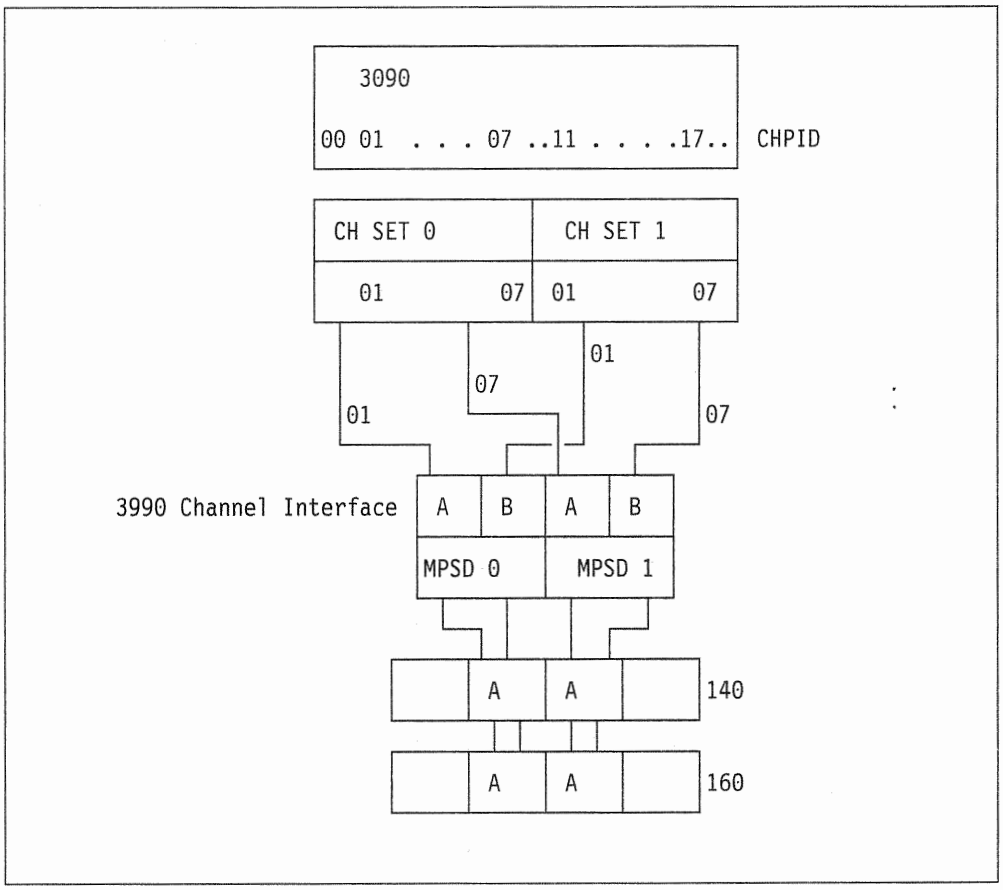

Figure 59. MVS/370 DLSE, 4 Channel Paths, 3090-200 or 400 in Partitioned Mode

The IOCP for this configuration:

```
CHPID01 CHPID PATH=((01,01,0),(07,07,0),(11,01,1),(17,07,1)),TYPE=BL
MPSD0 CNTLUNIT CUNUMBR=043,PATH=(01,11),PROTOCL=S4,SHARED=N,
        UNIT=3990,UNITADD=((40,64))
MPSD1 CNTLUNIT CUNUMBR=044,PATH=(07,17),PROTOCL=S4,
        SHARED=N,UNIT=3990,UNITADD=((40,64))
DLSEDASD IODEVICE ADDRESS=(140,64),CUNUMBR=(043,044),
          UNIT=3380
```

MVS/370 DLS IOCP Examples

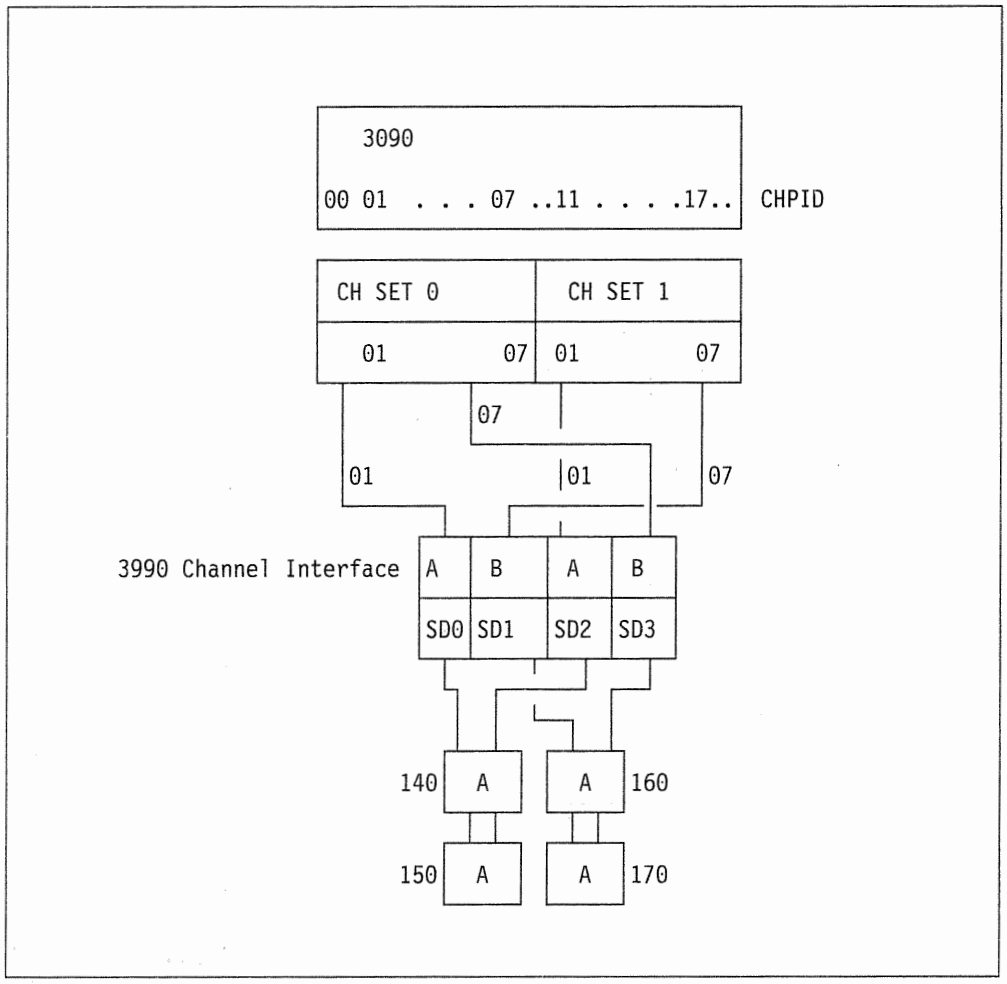

Figure 60. MVS/370, DLS, 4 Channel Paths, 3090-200 Multiprocessor Two Channel Paths To Each Logical DASD Subsystem

The IOCP for this configuration:

```
CHPID01 CHPID PATH=((01,01,0),(07,07,0),(17,07,1),(11,01,1)),TYPE=BL
SPSD0 CNTLUNIT CUNUMBR=002,PATH=(01),PROTOCL=S4,SHARED=N,
        UNIT=3990,UNITADD=((40,32))
SPSD2 CNTLUNIT CUNUMBR=004,PATH=(11),PROTOCL=S4,
        SHARED=N,UNIT=3990,UNITADD=((40,32))
DLSDASD1 IODEVICE ADDRESS=(140,32),CUNUMBR=(002,004),
          UNIT=3380
SPSD1 CNTLUNIT CUNUMBR=003,PATH=(17),PROTOCL=S4,SHARED=N,
        UNIT=3990,UNITADD=((60,32))
SPSD3 CNTLUNIT CUNUMBR=005,PATH=(07),PROTOCL=S4,
        SHARED=N,UNIT=3990,UNITADD=((60,32))
DLSDASD2 IODEVICE ADDRESS=(760,32),CUNUMBR=(003,005),
          UNIT=3380
```

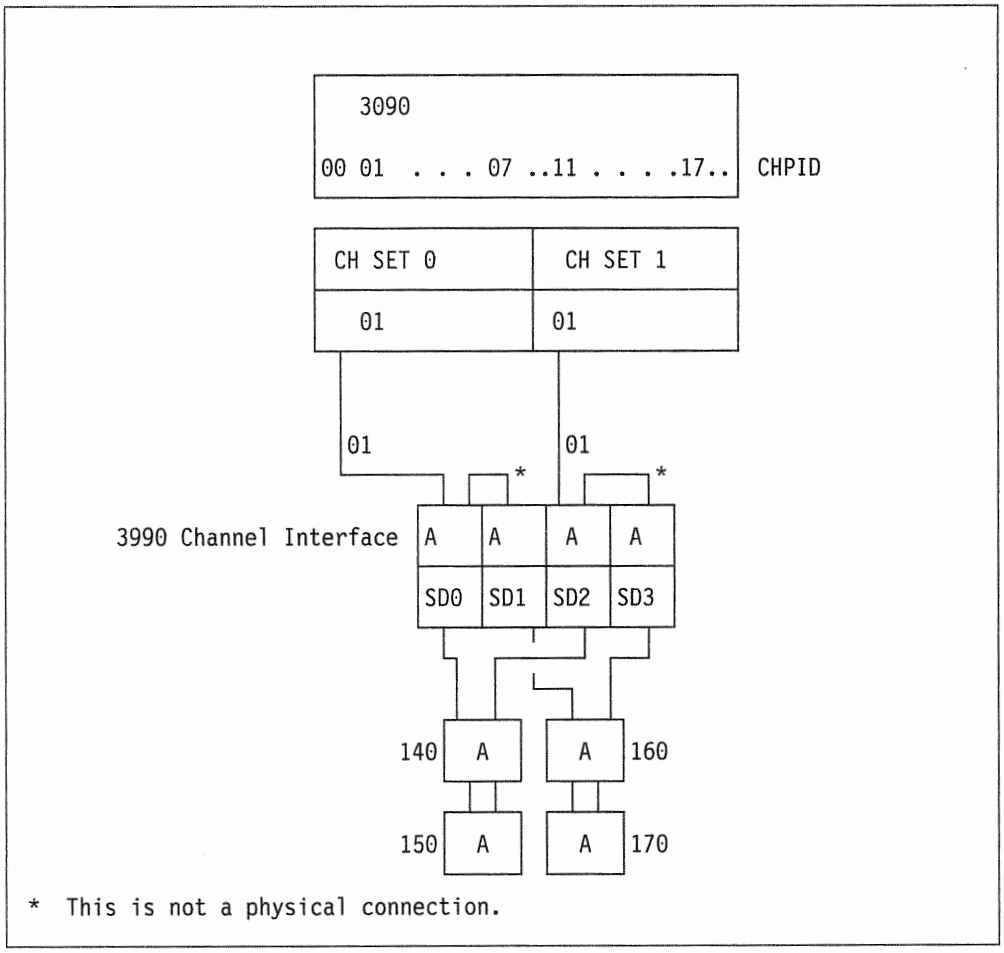

Figure 61. MVS/370, DLS, 2 Channel Paths, 3090-200 Multiprocessor Two Channel Paths To Each Logical DASD Subsystem

The IOCP for this configuration:

```
CHPID01 CHPID PATH=((01,01,0),(11,01,1)),TYPE=BL
SPSD0 CNTLUNIT CUNUMBR=007,PATH=(01),PROTOCL=S4,SHARED=N,
        UNIT=3990,UNITADD=((40,32))
SPSD2 CNTLUNIT CUNUMBR=009,PATH=(11),PROTOCL=S4,
        SHARED=N,UNIT=3990,UNITADD=((40,32))
DLSDASD1 IODEVICE ADDRESS=(140,32),CUNUMBR=(007,009),
          UNIT=3380
SPSD1 CNTLUNIT CUNUMBR=008,PATH=(01),PROTOCL=S4,SHARED=N,
        UNIT=3990,UNITADD=((60,32))
SPSD3 CNTLUNIT CUNUMBR=010,PATH=(11),PROTOCL=S4,
        SHARED=N,UNIT=3990,UNITADD=((60,32))
DLSDASD2 IODEVICE ADDRESS=(160,32),CUNUMBR=(008,010),
          UNIT=3380
```

Managing a 3990 in Multihost MVS Environments

There are several considerations for managing a 3990 in multihost MVS environments. These include:

- When you run EREP in a multihost MVS environment, the EREP job that you run should merge the ERDS from all attached systems in your installation. See *EREP User's Guide and Reference* for information on how to merge the ERDS for each system control program.
- The LISTDATA reports will display counts for activity from all attached hosts, not just the one issuing the request. In fact, the 3990 subsystem does not maintain counters by host.
- The IDCAMS commands can be issued from any MVS host with the appropriate level of software. Although a SETCACHE command is issued from one host, that command takes effect for the entire logical DASD subsystem, so it is effective for **ALL** hosts accessing data within that logical DASD subsystem. For example, if SETCACHE is used to set cache off for a volume, **NONE** of the hosts will thereafter be able to use cache on that volume. Cache remains off until turned on again by an IDCAMS command issued from any of the attaching hosts.

Considerations for Console Message Handlers

Programs that filter and/or route console messages should be reviewed to take into account SIMs and other new messages.

Chapter 9. 3990 Model 3 Subsystem Performance and Status Monitoring in an MVS Environment

Tools are available to monitor the performance and status of a 3990 Model 3 subsystem. These include:

- Cache RMF Reporter Program Offering/RMF
- ISMF Volume Application
- IDCAMS.

These tools provide the information necessary to manage and tune a 3990 Model 3 subsystem. This includes obtaining base cache statistics, cache fast write statistics, DASD fast write statistics, subsystem status, device status, and dual copy status information.

Performance Monitoring

The primary tools for monitoring cache performance under MVS are the licensed program Resource Measurement Facility (RMF) and the Cache RMF Reporter program offering. For day-to-day monitoring, the key RMF report is the Device Activity Report. In MVS/ESA and MVS/XA environments RMF reports I/O rates, device response times, and other performance statistics. If the device response times remain within an acceptable range, you should not have to do any other monitoring.

Cache RMF Reporter

The Cache RMF Reporter (program number 5798-DQD) is an automatic data collection and batch reporting tool. It consists of a user exit to the Resource Measurement Facility (RMF) and a Post Processor Report Program. The reports provide 3990 Model 3 statistics, which are useful in system tuning.

Invoked at the start of the RMF monitor session and at the end of each RMF interval, the Cache RMF Reporter obtains all 3990 Model 3 subsystem counts and status by obtaining performance statistics through the IDCAMS cache device utility user interface. The program then calculates the difference in the device counters (from the previous read) and writes these values with the subsystem status as user records in the System Management Facilities (SMF) data set. Statistics such as hit ratios and read-to-write ratios are produced later in batch mode by the Post Processor Report Program.

Major benefits of the Cache RMF Reporter program are:

- Automatic data collection
- Cache statistics synchronized with other RMF reports
- Flexible report selection
- Automatic calculation of all hit ratios and other cache statistics
- Report format designed for review at a terminal.

Program Outputs

The following types of reports are available.

- Device Counters Report
- Device Aggregation Report
- Subsystem Status Report
- Subsystem Counters Report
- Subsystem Aggregation Report
- Subsystem Summary Report.

Data in the Device Counters report, the Subsystem Counters report, and the Subsystem Status report is obtained by using the user interface of the IDCAMS cache device utility. The Device Counters report and the Subsystem Counters report list the calculated difference values received from the user interface for a specified RMF interval. The Subsystem Status report displays the cache configuration at the end of the RMF interval or at the end of the first RMF interval of a specified duration.

Both the Device Aggregation report and the Subsystem Aggregation report contain calculated data such as hit ratios and read-to-write ratios over the interval that you specified. This data provides an indication of how well a particular volume is performing and which devices should have access to cache and which should not. The Subsystem Aggregation report also contains a table showing the input and output activity for each device. These reports provide data that assist you in:

- Monitoring cache activity of the 3990 Model 3 so you can make decisions such as data set placement and volume caching status.
- Providing an easy way to monitor changes or trends in volume usage.

Figure 62 on page 125 and Figure 63 on page 126 give examples of a 3990 Model 3 Subsystem Aggregation report and a Device Aggregation report, respectively.

Figure 64 on page 126 shows a sample Subsystem Summary report. The report summarizes the statistics for all the devices attached to a 3990 Model 3 subsystem. Information such as read hit ratios and read-to-write ratios are available. Because all reports are formatted to be reviewed at a terminal as well as in a printout, the Subsystem Summary report permits you to quickly determine performance of the subsystem.

You can select the duration of the reporting interval as an RMF interval or as a specified period (even spanning multiple intervals). This capability can provide a set of summary reports for the period specified or reports for selective peak usage intervals.

Notes:

1. The sample reports are taken from an MVS/XA system.
2. When running with 3990 Model 3 support on MVS/370 or when running MVS/ESA or MVS/XA with dual copy and DASD fast write inactive, all fields related to dual copy and DASD fast write are blank.
3. An I/O request is considered a read operation if it contains a search, read (other than Read Sector) or a Space Count command and no write commands.

4. The storage director considers an I/O request to be a write operation as soon as it detects any write-type command in the chain. For example, the write operation can be a format write or an update write. The Format Write command establishes count areas of the track and formats the key and data areas of each track. The Update Write command changes the key and data areas of existing records without affecting other areas of the record or other records in the same track.

```
                    3990-03 SUBSYSTEM AGGREGATION REPORT

H/R=HIT RATIO, R/W=(SEARCH+READ)/WRITE, I/O'S=SEARCH+READ+WRITE, F/W=FAST WRITE

  NORMAL CACHING READ H/R -      0.952     CACHE F/W DATA READ H/R -     0.000
  NORMAL CACHING DASD F/W H/R - 0.955      CACHE F/W DATA WRITE H/R -    0.000
  SEQUENTIAL READ H/R -          0.986     TOTAL READ H/R -              0.954
  SEQUENTIAL DASD F/W H/R -      0.955     TOTAL F/W H/R -               0.955

  TOTAL CACHABLE READS -     1,369,267     NORMAL CACHING R/W RATIO -     5.4
  TOTAL CACHABLE WRITES -      334,454     SEQUENTIAL R/W RATIO -         1.0
  TOTAL CACHABLE I/O'S -     1,703,721     CACHE F/W DATA R/W RATIO -     0.0
  TOTAL I/O REQUESTS -       1,985,506     TOTAL (CACHE) R/W RATIO -      4.1

            TOTAL (CACHE) HIT RATIO -                  0.955
            SEQUENTIAL STAGES/TOTAL I/O REQUESTS -     0.005
            TOTAL CACHABLE I/O'S/TOTAL I/O REQUESTS -  0.858
            NORMAL STAGES PER SECOND -                 0.981
            SEQUENTIAL STAGES PER SECOND -             0.136
            TOTAL DESTAGES PER SECOND -                0.995

DEVICE     NO. OF   %     NO. OF   %     NO. OF   %     NO. OF   %     TOTAL   %
 VOLID      READS       READ HITS        WRITES      WRITE HITS       IO RATE
TSO001     410205  27     395594  30      66623  15      57671  18      6.54  24
EDS005     409524  27     400939  31         91   0         91   0      5.62  21
TSO016     112144   7          0   0     122942  27          0   0      3.22  12
TSO011     136035   9     121972   9      34961   8      33912  11      2.34   9
TSO005     201236  13     182608  14      21411   5      20555   6      3.05  11
PHD003     210651  14     204401  16     210200  46     205996  64      5.77  21
MRG002       1616   0       1431   0       1168   0       1168   0      0.04   0
CLR008      46382   3          0   0        317   0          0   0      0.64   2
TOTAL     1527793 100    1306945 100     457713 100     319393 100     27.22 100
```

Figure 62. 3990 Model 3 Subsystem Aggregation Report

```
                    3990-03 DEVICE AGGREGATION REPORT

H/R=HIT RATIO, R/W=(SEARCH+READ)/WRITE, I/O'S=SEARCH+READ+WRITE, F/W=FAST WRITE

  NORMAL CACHING READ H/R -      0.968     CACHE F/W DATA READ H/R -    0.000
  NORMAL CACHING DASD F/W H/R - 0.963     CACHE F/W DATA WRITE H/R -   0.000
  SEQUENTIAL READ H/R -          0.979     TOTAL READ H/R -             0.969
  SEQUENTIAL DASD F/W H/R -      0.832     TOTAL F/W H/R -              0.870

  TOTAL CACHABLE READS -       408,154     NORMAL CACHING R/W RATIO -    18.4
  TOTAL CACHABLE WRITES -       66,290     SEQUENTIAL R/W RATIO -         1.4
  TOTAL CACHABLE I/O'S -       474,444     CACHE F/W DATA R/W RATIO -     0.0
  TOTAL I/O REQUESTS -         476,828     TOTAL (CACHE) R/W RATIO -      6.2

            TOTAL (CACHE) HIT RATIO -                    0.955
            SEQUENTIAL STAGES/TOTAL I/O REQUESTS -       0.011
            TOTAL CACHABLE I/O'S/TOTAL I/O REQUESTS -    0.995
            NORMAL STAGES PER SECOND -                   0.166
            SEQUENTIAL STAGES PER SECOND -               0.072
            TOTAL DESTAGES PER SECOND -                  0.142
```

Figure 63. 3990 Model 3 Device Aggregation Report

```
                  3990-03 CACHING SUBSYSTEM SUMMARY REPORT

                                                   FAST      %      %      %      %
DEV DUAL          I/O   %    R/W  TOTAL  READ  WRITE    SEQ   FAST  CACHE    F/W
ADR COPY VOLSER  RATE I/O  RATIO    H/R   H/R    H/R  STAGE  WRITE    I/O  DESTG
--- ---- ------  ---- ---  -----  -----  ----  -----  -----  -----  -----  -----
5A0  08  TSO001   6.5  24    6.2   0.95  0.97   0.87    1.1  100.0   99.5    2.2
5A1      EDS005   5.6  21 4500.3   0.98  0.98   1.00    0.1  100.0   98.7    0.0
5A2    * TSO016   3.2  12    0.9   0.00  0.00   0.00    0.0    0.0    0.0    0.0
5A3      TSO011   2.3   9    3.9   0.91  0.90   0.97    0.2  100.0  100.0    0.7
5A4      TSO005   3.1  11    9.4   0.91  0.91   0.96    0.1  100.0  100.0    1.1
5A5  09  PHD003   5.8  21    1.0   0.98  0.97   0.98    0.3  100.0  100.0    0.9
5A6      MRG002   0.0   0    1.4   0.93  0.89   1.00    0.1  100.0   95.9    0.6
5A7    * CLR008   0.6   2  146.3   0.00  0.00   0.00    0.0    0.0    0.0    0.0


  SUBSYS TOTALS
  -------------
        CACHED   23.3  86    4.1   0.93  0.95   0.63    0.4  100.0   98.9    1.1
  * NON-CACHED    3.9  14    1.3   0.00  0.00   0.00    0.0    0.0    0.0    0.0
         TOTAL   27.2 100    3.3   0.93  0.95   0.63    0.4   86.5   95.7    0.9
```

Figure 64. 3990 Model 3 Caching Subsystem Summary Report

Installation Considerations

The minimum program release levels are listed in Chapter 8, "Installing Under MVS" on page 109. In addition, PL/I Transient Library Release 1.5 is also required.

For further information about installing this program, refer to *Cache RMF Reporter Program Description/Operations*.

Status Monitoring

You can use the IDCAMS LISTDATA command to request the following activity reports:

- Subsystem counters
- Subsystem status.

System Authorization Facility (SAF) authorization is not checked for LISTDATA reports, but is checked for access code generation.

Obtaining Reports Through Access Method Services (IDCAMS)

The IDCAMS LISTDATA command gathers information about 3990 Model 3 subsystem activity and status. The following list summarizes the activity reports and references sample report listings:

- Subsystem counters report for DEVICE, SUBSYSTEM, and ALL, which is a record of the performance statistics collected by the subsystem. Also included is status for the specified device. See Figure 65 on page 129 for a sample report layout.
- Subsystem status report which is a record of the status within the subsystem. A WTO option displays the subsystem's status on the system console. Also included is status for the specified device. See Figure 67 on page 131 for a sample report layout.

Chapter 11, "IDCAMS Reference—MVS Support for 3990 Basic Operations" on page 143 describes the full syntax.

Notes:

1. When you specify the WTO parameter for a subsystem status report, only the volume identified in the JCL or indicated in the command has information displayed on the console for device-level status. See "LISTDATA WTO Option" on page 134 for more information.
2. With all the LISTDATA reports, you can request a legend that describes the headings and abbreviations used.

Methods of Running IDCAMS Jobs

You can run the LISTDATA and SETCACHE command functions as batch jobs.

Also with the programming support for 3990 basic operations, System Authorization Facility is invoked to protect the system from unauthorized use of the LISTDATA ACCESSCODE command. See *System Authorization Guide* for details on setting up proper levels of authorization.

Using LISTDATA to Calculate Hit Ratios and Read-to-Write Ratios

The LISTDATA COUNTS command obtains the statistics counters that are maintained by the subsystem. You can calculate read-to-write, read hit, and write hit ratios from the output provided by the LISTDATA command.

The following procedure describes how to find the read-to-write and read hit ratios of a subsystem or particular device for a certain time period:

1. Use the LISTDATA COUNTS command at the beginning of the time period.
2. Use the LISTDATA COUNTS command at the end of the time period.
3. Calculate the difference between the counters by subtracting the beginning values from the corresponding end values.

   Note: The LISTDATA command does not reset the counters. The statistics counters are set to zero during a subsystem IML. After IML, the counters are incremented whenever one of the relevant events (for example, a read hit) occurs.

   If a counter overflows, it starts from zero again. When you analyze these counters, consider that the counters may have started over during the measurement.

4. Calculate read-to-write and read hit ratios on the basis of the difference values.

Note: For the 3990 Model 3, the statistics counters are maintained for the entire subsystem, not by storage director as was done for the 3880 Models 13 and 23. You may have to modify any existing programs that calculate these values for the subsystem for use on the 3990 Model 3.

Sample Subsystem Counters Report with Legend

Note: The following reports and legends are in condensed format.

The following LISTDATA command prints a Subsystem Counters Report with a legend. The report and legend are two separate figures.

```
LISTDATA-
  COUNTS                  /* print subsystem counts */ -
  VOL(338002) UNIT(3380)  /* for addressed device   */ -
  DEVICE                  /* only                   */ -
  LEGEND                  /* also print the legend  */
```

```
                  3990 STORAGE CONTROL  MODEL 03
                  3380 SUBSYSTEM COUNTERS REPORT
                  VOLUME 3380E0  DEVICE ID X'E0'
                       SUBSYSTEM ID X'0002'
                                 CHANNEL COMMAND CHAINS
                 ......SEARCH/READ.....  .........WRITE........     DASD
                      TOTAL  CACHE READ       TOTAL CACHE WRITE  FAST WRITE
REQUESTS
  NORMAL                11          6           5           0          0
  SEQUENTIAL             0          0           0           0          0
  CACHE FAST WRITE       1          1         210         210        N/A
TOTALS                  12          7         215         210          0
REQUESTS                        COMMAND CHAINS
  INHIBIT CACHE LOADING                    0
  BYPASS CACHE                             5
TRANSFER OPERATIONS                DASD/CACHE   CACHE/DASD
  NORMAL                                   5            0
  SEQUENTIAL                               0          N/A
DASD FAST WRITE RETRIES                    0
DEVICE STATUS     CACHING:         ACTIVE
                  DASD FAST WRITE: DEACTIVATED
                  DUPLEX PAIR:     NOT ESTABLISHED
```

Figure 65. Sample Subsystem Counters Report

```
                                LEGEND
                        SUBSYSTEM COUNTERS LEGEND
VOLUME                - VOLUME SERIAL NUMBER FOR WHICH THE DATA IS GATHERED
DEVICE ID             - CHANNEL CONNECTION ADDRESS OF THE DEVICE ON WHICH
                        THE I/O WAS DONE
SUBSYSTEM ID          - SUBSYSTEM TO WHICH THE DEVICE IS ATTACHED
CHANNEL COMMAND CHAINS  - A CCW CHAIN WHICH INCLUDES A SEEK OR LOCATE
                        COMMAND AND AT LEAST ONE SEARCH, READ OR WRITE
                        COMMAND
    SEARCH/READ       - CCW CHAINS WHICH CONTAIN AT LEAST ONE SEARCH OR
                        READ BUT NO WRITE CCW
    WRITE             - CCW CHAINS CONTAINING AT LEAST ONE WRITE
    DASD FAST WRITE - CCW CHAINS CONTAINING A SEARCH, READ OR WRITE WHICH
                        DO NOT INHIBIT DASD FAST WRITE
    TOTAL             - ALL SEARCH/READ CCW CHAINS
    CACHE READ        - CCW CHAINS WHICH REQUIRED NO DATA TO BE MOVED
                        TO/FROM THE DASD
    TOTAL             - ALL WRITE CCW CHAINS
    CACHE WRITE       - CCW CHAINS WHICH REQUIRED NO DATA MOVEMENT TO/FROM
                        THE DASD
  NORMAL              - CCW CHAINS WHICH DO NOT INCLUDE A DEFINE EXTENT CCW
                        OR SPECIFY NORMAL CACHE REPLACEMENT IN THE DEFINE
                        EXTENT CCW
  SEQUENTIAL          - CCW CHAINS WHICH SPECIFY SEQUENTIAL ACCESS IN THE
                        DEFINE EXTENT CCW
  CACHE FAST WRITE - CCW CHAINS WHICH SPECIFY CACHE FAST WRITE ACCESS IN
                        THE DEFINE EXTENT CCW
TOTALS                - TOTAL FOR EACH VERTICAL LINE ITEM
INHIBIT CACHE LOADING - CCW CHAINS WHICH SPECIFY INHIBIT CACHE LOADING
                        IN THE DEFINE EXTENT CCW
BYPASS CACHE          - CCW CHAINS WHICH SPECIFY THE BYPASS CACHE ATTRIBUTE
                        IN THE DEFINE EXTENT CCW
TRANSFER OPERATIONS - THE NUMBER OF DATA PROMOTION OPERATIONS WHICH MOVE
                        DATA
  DASD/CACHE          - THE NUMBER OF TRANSFER OPERATIONS WHICH MOVE DATA
                        FROM THE DASD TO THE CACHE
  CACHE/DASD          - THE NUMBER OF TRANSFER OPERATIONS WHICH MOVE DATA
                        FROM THE CACHE TO DASD
    NORMAL            - DATA MOVEMENT OPERATIONS EXCLUDING SEQUENTIAL
    SEQUENTIAL        - 'NEXT TRACK' DATA MOVEMENT OPERATIONS IN SEQUENTIAL
                        ACCESS MODE
DASD FAST WRITE RETRIES - NUMBER OF RETRIES REQUIRED BEFORE SPACE WAS
                        AVAILABLE IN THE NVS FOR DASD FAST WRITE DATA
DEVICE STATUS         - STATUS OF THE ADDRESSED DEVICE FOR THE FOLLOWING
   CACHING            - THE DEVICE CACHING STATE, ONE OF THE FOLLOWING
      ACTIVE          - CACHING ACTIVATED
      DEACTIVATION PENDING - TRANSFER OF MODIFIED DATA TO DASD FAILED
      DEACTIVATED     - CACHING DEACTIVATED
   DASD FAST WRITE - THE STATE OF THE FAST WRITE DATA WHICH WILL BE
                        STORED ON DASD, IS ONE OF THE FOLLOWING
      ACTIVE          - DASD FAST WRITE IS ALLOWED
      DEACTIVATION PENDING - TRANSFER OF MODIFIED DATA TO DASD FAILED
      DEACTIVATED     - DASD FAST WRITE IS DISABLED
   DUPLEX PAIR        - THE SIMPLEX/DUPLEX STATUS OF THE DEVICE WITH THE
                        STATE OF THE PAIR WHEN DUPLEX
      NOT ESTABLISHED - DEVICE IS SIMPLEX
      PRIMARY         - DEVICE IS THE PRIMARY OF A DUPLEX PAIR
      SECONDARY       - DEVICE IS THE SECONDARY OF A DUPLEX PAIR
        ACTIVE        - DUPLEX PAIR AVAILABLE
        PENDING       - COPY TO ESTABLISH A DUPLEX PAIR IN PROGRESS
        SUSPENDED     - SUSPENDED DUPLEX BY HOST COMMAND OR BY SUBSYSTEM
    ADDRESS OF PRIMARY|SECONDARY - CHANNEL CONNECTION ADDRESS OF THE
                        OTHER DEVICE IN THE DUPLEX PAIR
  PINNED DATA EXISTS - ONE OR MORE TRACKS FOR THIS VOLUME ARE PINNED
****                  - INDICATION OF AN INVALID OR UNDEFINED BIT
                        COMBINATION IN THE DEVICE STATUS BYTES
```

Figure 66. Sample Subsystem Counters Report Legend

Sample Subsystem Status Report with Legend

The following LISTDATA command prints a Subsystem Status Report with legend. The report and the legend are two separate figures.

```
LISTDATA-
  STATUS                      /* print subsystem status */ -
  VOLUME(338001) UNIT(3380)   /* for this subsystem     */ -
  LEGEND                      /* also print the legend  */
```

```
                3990 STORAGE CONTROL  MODEL 03
                 3380 SUBSYSTEM STATUS REPORT
                VOLUME 3380E3   DEVICE ID X'E3'
                     SUBSYSTEM ID X'0002'
                ..............CAPACITY IN BYTES..............
                SUBSYSTEM STORAGE           NONVOLATILE STORAGE
CONFIGURED              33554432                       2097152
AVAILABLE               33243136                           N/A
PINNED                         0                             0
OFFLINE                        0                           N/A
RETURNED STATUS:  0-19 00E32001 00800000 00000200 000001FB 40000000
                 20-39 00000000 00003000 00200000 00000000 00000002
SUBSYSTEM CACHING STATUS:  ACTIVE
SD CACHING CONDITIONS:     CACHE FAST WRITE ACTIVE
NVS STATUS:                DEACTIVATED-HOST COMMAND
DEVICES WITH STATISTICS:   32
STATISTIC SETS/DEVICE:     1
DEVICE STATUS
  FOR DEVICE ID X'E3'      CACHING:         ACTIVE
                           DASD FAST WRITE: DEACTIVATED
                           DUPLEX PAIR:     NOT ESTABLISHED
```

Figure 67. Sample Subsystem Status Report

```
                    LEGEND
                SUBSYSTEM STATUS LEGEND
VOLUME       - VOLUME SERIAL NUMBER FOR WHICH THE DATA IS GATHERED
DEVICE ID    - CHANNEL CONNECTION ADDRESS OF THE DEVICE ON WHICH THE
          I/O WAS DONE
SUBSYSTEM ID  - SUBSYSTEM TO WHICH THE DEVICE IS ATTACHED
CAPACITY IN BYTES
 SUBSYSTEM STORAGE - RANDOM ACCESS STORAGE
 NONVOLATILE STORAGE - RANDOM ACCESS STORAGE WITH A BACKUP POWER SOURCE
  CONFIGURED - THE AMOUNT OF STORAGE THAT EXISTS IN THE CACHE FOR
          THIS SUBSYSTEM
  AVAILABLE  - THE AMOUNT OF STORAGE THAT IS AVAILABLE FOR CACHING
  PINNED     - STORAGE UNAVAILABLE BECAUSE OF CACHE TO DASD EXCEPTIONS
  OFFLINE    - THE AMOUNT OF STORAGE THAT IS OFFLINE BECAUSE OF A
          HOST OR SUBSYSTEM ERROR
RETURNED STATUS - THE HEXADECIMAL DATA AS RETURNED FROM THE STORAGE
          DIRECTOR RESULTING FROM A SENSE STATUS COMMAND
SUBSYSTEM CACHING STATUS - OVERALL STATE OF THE SUBSYSTEM
  ACTIVE     - SUBSYSTEM STORAGE IS ONLINE
  ACTIVATION IN PROCESS - CACHE IS IN THE PROCESS OF BEING BROUGHT
          ONLINE
  DEACTIVATED-SUBSYSTEM ERROR - AN INTERNAL SUBSYSTEM ERROR OCCURRED
          WHICH CAUSED TERMINATION OF CACHING
  DEACTIVATED-HOST COMMAND - CACHING DEACTIVATED AS A RESULT OF AN
          EXPLICIT HOST SYSTEM REQUEST
  DEACTIVATION IN PROGRESS - A COMMAND REQUESTING DEACTIVATION HAS
          BEEN RECEIVED, AND THE DESTAGE IS IN PROGRESS
  DEACTIVATION FAILED - A COMMAND REQUESTING DEACTIVATION HAS BEEN
          RECEIVED, BUT THE DESTAGE FAILED
SD CACHING STATUS - CONDITION OF THE STORAGE DIRECTOR RECEIVING THE
          SENSE STATUS COMMAND
  SUBSYSTEM DISABLED - SUBSYSTEM STORAGE IS DISABLED FOR MAINTENANCE
  DEVICE UNAVAILABLE - IML DEVICE NOT AVAILABLE
  CACHE FAST WRITE DISABLED - DATA WRITTEN TO THE SUBSYSTEM CACHE AND
          NOT PERMANENTLY TRANSFERRED TO DASD IS DISABLED
  CACHE FAST WRITE ACTIVE - DATA WRITTEN TO THE SUBSYSTEM CACHE AND
          NOT PERMANENTLY TRANSFERRED TO DASD IS ACTIVE
NVS STATUS    - STATE OF THE NONVOLATILE STORAGE
  ACTIVE     - NONVOLATILE STORAGE IS ACTIVE
  DEACTIVATED-SUBSYSTEM ERROR - AN INTERNAL SUBSYSTEM ERROR OCCURRED
          WHICH CAUSED TERMINATION OF THE NONVOLATILE STORAGE
          AVAILABILITY
```

Figure 68 (Part 1 of 2). Sample Subsystem Status Report Legend

```
                    LEGEND
                SUBSYSTEM STATUS LEGEND

   DEACTIVATED-HOST COMMAND - NONVOLATILE STORAGE DEACTIVATED AS A
            RESULT OF AN EXPLICIT HOST SYSTEM REQUEST
   DEACTIVATION IN PROGRESS - A COMMAND REQUESTING DEACTIVATION HAS
            BEEN RECEIVED, AND THE DESTAGE IS IN PROGRESS
   DEACTIVATION FAILED - A COMMAND REQUESTING DEACTIVATION HAS BEEN
            RECEIVED, BUT THE DESTAGE FAILED
   DISABLED   - NVS IS DISABLED FOR MAINTENANCE
DEVICES WITH STATISTICS - THE NUMBER OF DEVICES FOR WHICH THE SUBSYSTEM
            IS MAINTAINING STATISTICS
STATISTIC SETS/DEVICE - NUMBER OF SETS OF STATISTICS WHICH ARE MAINTAINED
            FOR EACH DEVICE
DEVICE STATUS
 FOR DEVICE ID - CHANNEL CONNECTION ADDRESS OF THE DEVICE WITH THE
            FOLLOWING STATUS
  CACHING    - THE DEVICE CACHING STATE, ONE OF THE FOLLOWING
    ACTIVE   - CACHING ACTIVATED
    DEACTIVATION PENDING - TRANSFER OF MODIFIED DATA TO DASD FAILED
    DEACTIVATED - CACHING DEACTIVATED
  DASD FAST WRITE - THE STATE OF THE FAST WRITE DATA WHICH WILL BE
            STORED ON DASD, IS ONE OF THE FOLLOWING
    ACTIVE   - DASD FAST WRITE IS ALLOWED
    DEACTIVATION PENDING - TRANSFER OF MODIFIED DATA TO DASD FAILED
    DEACTIVATED - DASD FAST WRITE IS DISABLED
  DUPLEX PAIR - THE SIMPLEX/DUPLEX STATUS OF THE DEVICE WITH THE STATE
            OF THE PAIR WHEN DUPLEX
    NOT ESTABLISHED - DEVICE IS SIMPLEX
    PRIMARY  - DEVICE IS THE PRIMARY OF A DUPLEX PAIR
    SECONDARY - DEVICE IS THE SECONDARY OF A DUPLEX PAIR
     ACTIVE - DUPLEX PAIR IS AVAILABLE
     PENDING - COPY TO ESTABLISH A DUPLEX PAIR IS IN PROGRESS
     SUSPENDED - SUSPENDED DUPLEX BY HOST COMMAND OR BY SUBSYSTEM
  ADDRESS OF PRIMARY|SECONDARY - CHANNEL CONNECTION ADDRESS OF THE OTHER
            DEVICE IN THE DUPLEX PAIR
  PINNED DATA EXISTS - ONE OR MORE TRACKS FOR THIS VOLUME ARE PINNED
****        - INDICATION OF AN INVALID OR UNDEFINED BIT COMBINATION
            IN THE RETURNED STATUS BYTES
```

Figure 68 (Part 2 of 2). Sample Subsystem Status Report Legend

LISTDATA WTO Option

The LISTDATA STATUS WTO command is enhanced for 3990 Model 3 to include additional information regarding the 3990 Model 3 subsystem status. When you specify the WTO option with the command LISTDATA STATUS FILE(*filename*), the full subsystem report is printed as usual, and summary information is displayed at the host console. Examples of the messages that may be displayed include:

```
IDC01552I SUBSYSTEM CACHING STATUS:  ACTIVE DEV X'123'
IDC01553I NVS STATUS: DEACTIVATED-HOST COMMAND-DEV X'123'
IDC01554I DASD FAST WRITE STATUS: DEACTIVATED
IDC01555I DUPLEX PAIR STATUS: ACTIVE-PRI DEV X'123' SEC DEV X'01'
IDC01556I CACHE FAST WRITE STATUS:  ACTIVE DEV X'123'
```

DASD Fast Write status and duplex pair status are provided for the volume identified in the DD statement identified by the FILE parameter or in the VOLUME and UNIT parameters.

Chapter 10. Using Dual Copy, DASD Fast Write, and Cache Fast Write in MVS Environments

This chapter describes uses for dual copy, DASD fast write, and cache fast write in MVS environments.

Dual copy and DASD fast write are supported in MVS/ESA and MVS/XA. Cache fast write is supported for sort work files in the appropriate release of DFSORT.

MVS/370 supports cache fast write for sort work files in the appropriate release of DFSORT, but does not provide software support for dual copy or DASD fast write.

Using Dual Copy in MVS/ESA and MVS/XA Environments

The 3990 Model 3 dual copy function significantly improves data availability.

A pair of properly configured 3990 Model 3s in a dual-frame configuration with dual copy used on all volumes eliminates all single points of failure which might prevent access to data—from processor channels to storage control, to DASD volume, to record. All path components are replicated. Failing operations are retried through another path, possibly to the alternate device. Using dual copy may result in fewer application outages, fewer IPLs, and a reduced frequency of DASD recovery activity.

Using dual copy on important system and application volumes can provide significant relief in scheduling batch applications and routine backups. With the shrinking batch window and growing numbers of installations with 24-hour operations, many installations cannot backup as often as they would prefer. Some installations are copying key volumes while their applications are running (and updating the volumes). Using dual copy on key system and application volumes ensures that the subsystem maintains duplicate, up-to-date copies of these volumes. As a side benefit, installations may be able to reduce the frequency of full volume backups or Image Copies of data bases.

Note: Backups and log tapes cannot be completely eliminated because of the need to recover from application logic errors as well as multiple hardware failures.

Implementation of dual copy is straightforward. No application changes are necessary as long as standard access methods are used.

Programs that access volumes using dual copy or DASD fast write must meet the following requirements:

- Do not perform Write Home Address Record Zero operations.
- Use only standard Record 0 format. MVS/ESA and MVS/XA access methods use the standard Record 0 format.

- Do not define duplicate Record IDs on a track.
- Do not assign alternate tracks outside the range provided by IBM.

Normally, using the dual copy function requires no special attention from the installation beyond having procedures in place to establish the dual copy pairs and perform recovery actions when required.

Volume-Specific Examples of Using Dual Copy

The following examples describe current recovery scenarios for several important classes of volumes that are candidates for dual copy, and how dual copy might be used effectively in conjunction with, or in addition to, the current procedures. The volume classes include:

- MVS system data sets
- RACF control data sets
- DFHSM control data sets
- Integrated catalog facility catalogs
- Critical system volumes (such as load libraries and IMS libraries)
- IMS data base volumes
- CICS application volumes
- DB2 data base volumes
- Various user volumes.

MVS System Data Sets

Examples of data sets that are critical to the availability of an MVS system include:

- SYS1.LINKLIB
- SYS1.LPALIB
- SYS1.PARMLIB
- SYS1.PROCLIB
- Integrated catalog facility master catalog
- SYS1.NUCLEUS.

Using dual copy may prevent a system IPL caused by a hardware failure on a volume containing one of these data sets.

Without dual copy, an I/O error on the SYSRES volume may cause a system IPL. Installation response is to IPL again with the alternate SYSRES. Depending on recovery/restart requirements, the outage could be from 10 minutes to an hour or more. By using dual copy on SYSRES, IPLs due to DASD hardware failure can be reduced. The result is fewer end user outages and less recovery/restart activity.

Integrated catalog facility master catalog considerations are described later.

RACF Control Data Set

The Resource Access Control Facility (RACF) control data set is another critical system resource. An I/O error on this data set may lead to operations intervention.

RACF provides a facility for maintaining a software duplicate of information in the RACF control data set. If an error occurs on the primary copy, the installation may switch to the duplicate copy.

The installation may wish to evaluate the use of the 3990 Model 3 dual copy function for the RACF control data set.

Integrated Catalog Facility Catalogs

The effects of a hardware failure on an integrated catalog facility catalog volume are different for master catalogs and user catalogs. If the master catalog fails, a system IPL is required. If a user catalog fails, application data is unavailable for allocation.

Integrated Catalog Facility Master Catalog: Without the 3990 Model 3 dual copy function, hardware failure of the master catalog volume may lead to a system IPL using the MVS alternate master catalog facility. During the nucleus initialization program (NIP) processing, the operator is prompted for an alternate nucleus member describing the alternate master catalog. Common practice today is to limit update activity to the master catalog by having it contain just the critical system data sets and pointers to user catalogs. Thus, if the master catalog has no changes, the alternate can be invoked with no difficulty. Using dual copy may reduce the IPLs caused by DASD hardware failures.

User Catalogs: User catalogs typically have a fairly high level of change activity. For this reason, many installations backup their more critical user catalogs frequently. Without dual copy, recovery typically involves:

1. Creating a new catalog entry
2. Importing the most recent backup copy of the catalog
3. Updating the catalog entries made since the backup copy.

Recovery may involve using volume table of contents (VTOCs), VSAM Volume Data Sets (VVDSs), and System Management Facility (SMF) records, and can take anywhere from hours to days. Use of a tool such as the program offering Integrated Catalog Forward Recovery Utility (program number 6798-DXQ) may substantially reduce the manual effort required.

Dual copy may be desirable where there is a need to reduce the number of catalog backups, or where even the reduced recovery time provided by the integrated catalog facility recovery utility is not sufficient to satisfy user availability requirements.

Other Critical System Data Sets

There are a number of other critical system data sets, such as:

- Program libraries
- IMS ACBLIB
- IMS MFSLIB
- DFHSM control data sets (MCDS, BCDS, and OCDS)
- ISPF data sets
- LINKLIST data sets
- SMP data sets
- Other system data sets with low levels of update activity
- Other system data sets for which there are facilities in place to log changes or otherwise provide backup copies.

All of these may still be candidates for dual copy because dual copy insulates the operating system or applications from the effects of a DASD hardware failure.

Full Function IMS Data Bases

Without dual copy, an I/O error on an IMS data base volume can bring the application down and invoke data base recovery procedures. Depending on the frequency of image copy and update activity, the recovery process could take several hours. The basic steps in IMS recovery include:

1. Locate the latest image copy tape(s)
2. Locate a spare volume
3. Restore all volumes of the data base
4. Find all log data sets
5. Generate JCL for the recovery
6. Run change accumulation (if appropriate)
7. Apply the log data sets or change accumulation data sets
8. Restart the application.

Data Base Recovery Control (DBRC) may be used to facilitate recovery. It can be used to identify the proper image copy tapes and log data sets, perform change accumulation, and generate the JCL for the recovery process.

Dual copy can reduce application outages caused by hardware failure and the resulting recovery activity.

CICS/DLI Data Bases

Considerations are very similar to full function IMS data bases.

CICS VSAM Data Sets: Without dual copy, considerations here are quite similar to IMS, with some differences in the recovery process:

1. Locate the backup tapes
2. Locate a spare volume
3. Import the backup tape
4. Find the log tapes
5. Generate JCL for the application's recovery routine
6. Run this recovery routine to apply the log tapes
7. Restart the application.

If there is no user-written recovery routine, invoke the recovery procedures the installation has defined.

Dual copy can significantly reduce application outages caused by hardware failure and the resulting recovery activity.

DB2 Data Base Volumes

Several data sets are essential to the availability of a DB2 system, including:

- Boot strap data set (BSDS)
- Recovery log
- DB2 catalog
- DB2 directory
- Data base data sets.

DB2 duplexes the BSDS and the Recovery Log. If the hardware fails, there are utility commands for creating a new BSDS and Recovery Log and copying the active data set without disrupting DB2 operation.

DB2 does not duplex capability for any of the other data sets listed above. Recovery and image copy utility functions are provided. The DB2 Catalog and the DB2 Directory are data bases. The same utility command, RECOVER, is used to recover from a catalog or directory failure as for a data base failure.

DB2 installations use the image copy utility to create full or incremental copies of data bases on a regular basis. The RECOVER command uses these image copies and the recovery log to complete a data base recovery. Depending on the scope of the recovery, (page, data base, or table space), part of a data base, an entire data base, or multiple data bases are unavailable while the RECOVER utility restores the data base.

Because of their importance to the DB2 system, the DB2 catalog and directory are very good candidates for dual copy. Dual copy can improve the availability of data base, directory, and catalog data and reduce outages on this data resulting from hardware failures.

Other Data Base Applications

Evaluate each data base for applicability of dual copy. An analysis of data bases with high-availability requirements will identify data set or volume candidates and the value of using dual copy for those candidates.

User Volumes

User volumes are typically backed up on a regular schedule determined by operations and the end user groups. A hardware failure may result in the restore of the most recent backup tape. Recovery of updates or new data sets created after the most recent backup tape was created is typically an end user responsibility. The impact of such a failure varies greatly, depending on the user's capability to recreate the lost data.

Using an archival/backup system such as DFHSM can substantially reduce the recovery effort. Typically, the latest backup tapes are applied, and then the restore function is used to recover data sets created or updated since the last backup, up to the last DFHSM backup cycle. Again, further recovery action is typically up to the user.

Dual copy may be used routinely on frequently-updated user volumes, on volumes containing data that is very difficult to recreate, or on application volumes with high-availability requirements.

DASD Fast Write in MVS/ESA and MVS/XA Environments

DASD fast write improves the performance of data sets that have a significant amount of write activity. Good DASD fast write candidates include catalogs, and many logging functions. Data bases or VSAM data sets may also be good candidates.

Typically, the write hit ratios observed have been very high for two reasons:

- Most applications read a record before updating it, so the number of truly random write misses is quite small.
- When writing a sequential output file, a format write is used for the entire track, which is considered a write hit by the 3990 Model 3 (no stage is required since the entire track is rewritten).

Some applications may not show a performance improvement with DASD fast write. As in the case of normal caching, write updates where the transfer size is more than half a track may not benefit from DASD fast write. Data for which the write hit ratio is less than 70% might not benefit from DASD fast write. Also, applications such as very-high-activity logging functions that write half a track or more at a time with very high request rates might not perform better than noncached DASD. (This is true even if there is a high write hit ratio.) Such applications must be individually evaluated.

Guidelines for Using Cache Fast Write with DFSORT in MVS Environments

Cache fast write is supported for sort work files in the appropriate release of DFSORT in all MVS environments. We recommend that you use the following guidelines in implementing DFSORT with cache fast write:

- Use cache fast write for small to intermediate-size sorts. Large sorts (for example, sorts that require more sort work space than is available in the cache) should be directed to DASD volumes that are not eligible for cache fast write because the volumes are:
  - Not attached to a 3990 Model 3
  - Attached to a 3990 Model 3 with device caching set off for the volume.
- Estimate approximate sort work space requirements by multiplying the input data set size by 1.7. See *DFSORT Application Programming Guide* for details.
- Ensure that the estimated total concurrent sort work space in bytes does not exceed the available cache storage. If other data will also be cached, reduce the total concurrent sort work space appropriately. (See the recommended process below.) Be aware that larger sort jobs could cause temporary variations in the DASD subsystem response for other applications using the same cache. If possible, schedule larger sort runs at times when the cache workload is lighter.
- Follow the existing guidelines on placement of sort work file volumes:
  - Isolate the sort work volumes from other high activity system data sets
  - Place the sort work volumes on DASD strings dedicated to sort activity.
- Sort performance will probably not be improved by using more than three or four sort work files.
- Following are recommended guidelines for selecting and migrating data to a 3990 Model 3 that is expected to have a significant sort workload:
  - Migrate the sort volumes to the 3990 Model 3 before caching the other data
  - Measure the performance
  - Gradually add more caching volumes to the subsystem
  - Monitor both the performance of the sort volumes and the performance of the added volumes
  - Continue adding more workload as long as the subsystem performance is satisfactory.

MVS Cache and Cache Fast Write Data Set Selection Guidelines

Figure 69 shows data set candidates for basic caching and cache fast write operations.

Data Set Categories	System and General Data Sets	TSO	IMS	CICS
Best cache candidates	Partitioned data sets, PROCLIB, control data sets, catalogs, RACF and DFHSM control data sets	Libraries, ISPF, TSO user data, catalogs	ACB, MFS, ADF work data base, ADF rules, program libraries	Program libraries
Good cache candidates	Sequential input data sets		Data base indexes, moderate-sized data bases (primarily inquiry), IMS short message queue	Application data sets
Cache Fast Write candidates	SORTWK			
Potential good cache candidates (See the following note.)	Other system-type data sets, lookup tables or dictionaries, custom systems		Image copy, RECON data set, larger data bases (with larger cache sizes), scratch pad area, long message queue, QBLKS	

Figure 69. MVS Cache and Cache Fast Write Data Selection Guidelines

Note: Custom-designed systems or other software might have good cache candidates that you can evaluate by the criteria given above. For example, data sets having a read hit ratio of 70% or better and a read-to-write ratio of 2:1 are good candidates for a 3990 Model 3.

MVS DASD Fast Write Data Selection Guidelines

Data Set Categories	System and General Data Sets	TSO	IMS	CICS
Good DASD Fast Write candidates	Sequential data sets, work volumes, DFHSM control data sets	Libraries, ISPF, TSO user data, Catalogs	Moderate-sized data bases, IMS message queues, scratch pad area, image copy, RECON, OLDS	System Log, Intra-partition transient data, aux temporary storage, aux trace. Larger application data bases with high update activity (recommended with the larger cache sizes)
Potential good DASD Fast Write candidates (See the following note.)	Other system-type data sets, lookup tables or dictionaries, custom systems, data sets with high update activity		Larger data bases with high update activity (recommended with the larger cache sizes)	Larger application data bases with high update activity (recommended with the larger cache sizes)

Figure 70. MVS DASD Fast Write Data Set Selection Guidelines

Note: Custom-designed systems or other software might have good cache candidates that you can evaluate by the criteria given above. For example, data sets having read hit and DASD fast write hit ratios of 70% or better are good candidates for a 3990 Model 3.

The performance of DASD fast write in typical TSO and IMS data base applications has been modelled using data collected from representative large TSO and IMS data base systems. In such environments, DASD fast write performance improved subsystem response time and increased the number of accesses per second.

In many installations, it is desirable to use DASD fast write for applications with very high levels of write activity. Such applications require analysis, and probably testing on the 3990 Model 3. It is difficult to develop guidelines for these, due to the varying load on the storage control and the I/O rate to the write data set. The suggested procedure is to place this high write activity application on the 3990 Model 3 first, and add more workload gradually. In general, the higher the hit ratio of the additional data, the more easily the additional load may be absorbed with a good response time.

Chapter 11. IDCAMS Reference—MVS Support for 3990 Basic Operations

This chapter describes the IDCAMS commands and parameters for 3990 basic cache operations and the LISTDATA ACCESSCODE function for basic cache and noncache operations. See Chapter 8, "Installing Under MVS" on page 109 for the program levels that provide these capabilities.

LISTDATA (Basic Function)

Use the LISTDATA command with the 3990 Model 3 to obtain the:

- Subsystem Counters Report—a record of the counters within the subsystem at the time the report is requested.
- Subsystem Status Report—a record of the status within the subsystem at the time the report is requested.
- Remote Access Code—information used for service.

With either the Subsystem Counters Report or the Subsystem Status Reports, you can request a legend that describes the headings used.

A user interface has been provided specifically for non-access method services callers (for example, the Cache RMF Reporter). This interface allows you to obtain subsystem status or count information. The description of the interface is in Chapter 9, "3990 Model 3 Subsystem Performance and Status Monitoring in an MVS Environment" on page 123.

The format of the LISTDATA command is:

LISTDATA	**{COUNTS|STATUS|ACCESSCODE}** **{FILE(***ddname***)|VOLUME(***volser***)** + **UNIT(***unittype***)}** **[DEVICE|SUBSYSTEM|ALL]** **[LEGEND|NOLEGEND]** **[OUTFILE(***ddname***)|OUTDATASET(***dsname***)]** **[WTO]**

LISTDATA can be abbreviated: LDATA

Required Parameters

COUNTS|STATUS|ACCESSCODE
specifies the type of report or that the access code be printed.

COUNTS
specifies that a subsystem counters report be printed.

Abbreviation: CNT

STATUS
specifies that a subsystem status report be printed.

Abbreviation: STAT

ACCESSCODE
specifies that the serial number of the storage control, the number of the storage cluster, and the remote access code are returned to the system console. This information is for service and is returned in message IDC01557I, which will be issued for both clusters when available.

Abbreviation: ACODE

Notes:

1. ACCESSCODE can also be used with the 3380 CJ2, and the 3990 Models 1 and 2.
2. You must have DASDVOL ALTER authority from the SAF MVS Router to issue the ACCESSCODE parameter.

FILE(*ddname***)|VOLUME(***volser***) UNIT+ (***unittype***)**
specifies a device that resides in the subsystem for which the report is requested.

FILE(*ddname***)**
specifies the name of a DD statement that identifies the unit and volume of a device within the subsystem. For *ddname*, substitute the name of the DD statement identifying the device type and volume serial number.

VOLUME(*volser***)**
specifies the volume serial number of a volume within the subsystem. For *volser*, substitute the volume serial number of the volume.

Abbreviation: VOL

UNIT(*unittype***)**
specifies the unit type of the subsystem. This parameter is required only when the VOLUME parameter is specified.

Optional Parameters

DEVICE|SUBSYSTEM|ALL
specifies the subsystem counters to be reported in the subsystem counters report. These parameters can be specified only when the COUNTS parameter is specified.

DEVICE
specifies that the subsystem counters for the addressed device are included in the subsystem counters report.

Abbreviation: DEV

SUBSYSTEM
specifies that the subsystem counters for all devices within the subsystem are included in the subsystem counters report.

Abbreviation: SSYS or SUBSYS

ALL
specifies that subsystem counters for all devices on all like models of the storage controls be included in the subsystem counters report. ALL is the default parameter if COUNTS and neither DEVICE or SUBSYSTEM is specified.

LEGEND|NOLEGEND

specifies whether a legend explaining the headings used is printed following the requested report. LEGEND and NOLEGEND can be specified only if COUNTS or STATUS is specified.

LEGEND

specifies that the legend is printed.

Abbreviation: LGND

NOLEGEND

specifies that the legend is not printed. NOLEGEND is the default if COUNTS or STATUS is specified, and LEGEND is not specified.

Abbreviation: NOLGND

OUTFILE(*ddname*)|OUTDATASET(*dsname*)

specifies an alternate target data set if the SYSPRINT data set is not used for the report.

OUTFILE(*ddname*)

specifies the name of a DD statement identifying the data set to be used to contain the report. For *ddname*, substitute the name of the DD statement identifying the data set.

Abbreviation: OFILE

OUTDATASET(*dsname*)

specifies the name of the alternate target data set. For *dsname*, substitute the name of the data set to be used. The data set name must be cataloged.

Note: Be sure to erase the previous alternate target data set before specifying the OUTDATASET parameter. If you do not erase the old data set, your reports may not be accurate. If a report seems to be in error, compare the time field with the time the job was submitted.

Abbreviation: ODS or OUTDS

WTO

specifies that messages are displayed on the system console indicating the status of the subsystem. NVS status, DASD fast write status, and cache fast write status are given in messages IDC01553I, IDC01554I, and IDC01556I. If the addressed device is one of a duplex pair, duplex pair status is given in message IDC01555I.

Abbreviation: None

Note: This parameter can be used only if the STATUS parameter is specified.

Examples of Using LISTDATA to Generate Basic Function Subsystem Status Reports

Listing Subsystem Counters for a Particular Device

In this example, a Subsystem Counters Report for a particular device is being requested.

```
//LISTDAT1  JOB   ...
//STEP1     EXEC  PGM=IDCAMS
//LISTVOL1  DD    UNIT=3380,VOL=SER=VOL123,DISP=SHR
//SYSPRINT  DD    SYSOUT=A
//SYSIN     DD    *
  LISTDATA-
   COUNTS-
   FILE(LISTVOL1)-
   DEVICE
/*
```

Job control language statement:

- LISTVOL1 DD, which specifies a 3380 unit and volume VOL123 for which the report is requested.

The LISTDATA command parameters are:

- COUNTS, which specifies that a Subsystem Counters Report be printed.
- FILE, which specifies LISTVOL1 as the DD statement that allocates a 3380 unit and volume VOL123.
- DEVICE, which specifies that the Subsystem Counters Report should include only subsystem counters for the addressed device.

See "Reports" on page 149, for an example of a printed Subsystem Counters Report.

Listing Subsystem Counters for All Devices within a Subsystem

In this example, a Subsystem Counters Report is being requested for all devices within a subsystem.

```
//LISTDAT2  JOB   ...
//STEP1     EXEC  PGM=IDCAMS
//OUTDD     DD    DSN=OUTDS,DISP=(NEW,KEEP),VOL=SER=OUTVOL,
//          UNIT=3480,DCB=(RECFM=VBA,LRECL=125,BLKSIZE=629)
//SYSPRINT  DD    SYSOUT=A
//SYSIN     DD    *
  LISTDATA-
   COUNTS-
   VOLUME(VOL002)-
   UNIT(3380)-
   SUBSYSTEM-
   OUTFILE(OUTDD)
/*
```

Job control language statement:

- OUTDD DD, which allocates the output data set (DSN=OUTDS) on tape (UNIT=3480) for use by the LISTDATA command. If you do not allocate an output data set, the subsystem counters are printed on the SYSPRINT data set. The DCB parameter is required for the alternate output data set if it is new.

The LISTDATA command parameters are:

- COUNTS, which specifies that a Subsystem Counters Report is printed.
- VOLUME, which specifies volume VOL002.
- UNIT, which specifies a 3380 unit.
- SUBSYSTEM, which specifies that the Subsystem Counters Report should include counters for all devices within this subsystem.
- OUTFILE, which specifies OUTDD as the name of the DD statement identifying the data set used to contain the report.

See "Reports" on page 149, for an example of a printed Subsystem Counters Report.

Listing Subsystem Counters for All Devices on All Like Subsystems

In this example, a Subsystem Counters Report is being requested for all devices on all like subsystems.

```
//LISTDAT3  JOB   ...
//STEP1     EXEC  PGM=IDCAMS
//OUTDS     DD    DSN=OUTDATA,DISP=(,CATLG),UNIT=3380,
//                VOL=SER=VOL001,SPACE=(CYL,(2,1)),
//                DCB=(RECFM=VBA,
//                LRECL=250,BLKSIZE=504)
//SYSPRINT  DD    SYSOUT=A
//SYSIN     DD    *
  LISTDATA-
   COUNTS-
   VOLUME(VOL002)-
   UNIT(3380)-
   ALL-
   OUTDATASET(OUTDATA)
/*
```

Job control language statement:

- OUTDS DD, which allocates the output data set (DSN=OUTDATA) on a 3380 (UNIT=3380) for use by the LISTDATA command. If an output data set is not allocated, the report is printed on the SYSPRINT data set. The DCB parameter is required for the alternate output data set if it is new. The output data set is cataloged in the master catalog (DISP=(,CATLG)). This DD statement allocates 2 cylinders for the output data set and, if more space is required for the report, the space is extended in increments of 1 cylinder.

The LISTDATA command parameters are:

- COUNTS, which specifies that a Subsystem Counters Report be printed.
- VOLUME, which specifies volume VOL002.
- UNIT, which specifies a 3380 unit.

- ALL, which specifies that the Subsystem Counters Report should include subsystem counters for all devices on all like subsystems.
- OUTDATASET, which identifies OUTDATA as the output data set to be used for the report, rather than the SYSPRINT data set.

See "Reports" on page 149, for an example of a printed Subsystem Counters Report.

Listing Subsystem Status

In this example, subsystem status report is being requested.

```
//LISTDAT4  JOB   ...
//STEP1     EXEC  PGM=IDCAMS
//LISTVOL2  DD    UNIT=3380,VOL=SER=VOL269,DISP=SHR
//SYSPRINT  DD    SYSOUT=A
//SYSIN     DD    *
  LISTDATA-
   STATUS-
   FILE(LISTVOL2)-
   WTO
/*
```

Job control language statement:

- LISTVOL2 DD, which specifies a 3380 unit for which subsystem status is being reported.

The LISTDATA command parameters are:

- STATUS, which specifies that a Subsystem Status Report be printed.
- FILE, which specifies LISTVOL2 as the DD statement that allocates a 3380 unit and volume VOL269.
- WTO which specifies that informational messages are displayed on the system console indicating the status of the subsystem, NVS, and DASD fast write, cache fast write, and duplex pair if the addressed device is one of a duplex pair. For example, WTO can produce messages similar to those below:

```
IDC01552I SUBSYSTEM CACHING STATUS: ACTIVE DEV X'123'

IDC01553I NVS STATUS: DEACTIVATED-HOST COMMAND-DEV X'123'

IDC01554I DASD FAST WRITE STATUS: ACTIVE-DEV X'123'

IDC01555I DUPLEX PAIR STATUS: ACTIVE-PRI DEV X'123' SEC DEV X'01'

IDC01556I CACHE FAST WRITE STATUS: DISABLED-DEV X'123'
```

See "Status Report" on page 152, for an example of a printed Subsystem Status Report.

Generating a Remote Support Access Code

In this example, a remote support access code is requested; this example is valid for the 3990 Models 1, 2, and 3, and the 3380 CJ2.

```
//LISTDAT1  JOB    ...
//STEP1     EXEC   PGM=IDCAMS
//LISTVOL1  DD     UNIT=3380,VOL=SER=VOL123,DISP=SHR
//SYSPRINT  DD     SYSOUT=A
//SYSIN     DD     *
  LISTDATA-
   ACCESSCODE-
   FILE(LISTVOL1)
/*
```

Job control language statement:

- LISTVOL1 DD, which specifies a 3380 unit and volume VOL123 for which the report is requested.

The LISTDATA command parameters are:

- ACCESSCODE, which specifies that a remote support access code is generated if the Storage Cluster Modem switch is set to Enable.
- FILE, which specifies LISTVOL1 as the DD statement that allocates a 3380 unit and volume VOL123.

Reports

Use the LISTDATA command to list information about activity within the 3990 Model 3. You can obtain two different types of reports: subsystem counters report and subsystem status report. Optionally, you can also obtain a legend for each report. This legend describes the headings used in the report. When you request a legend, it is printed at the end of the report.

Note: The following reports and legends are in condensed format.

Counters Report

The Subsystem Counters Report provides a record of the counters within the 3990 Model 3 at the time the report is requested. The counters are not reset when the report is taken. Figure 71 on page 150 is a sample Subsystem Counters Report for 3990 Model 3.

```
                    3990 STORAGE CONTROL  MODEL 03
                    3380 SUBSYSTEM COUNTERS REPORT
                    VOLUME 3380E0  DEVICE ID X'E0'
                         SUBSYSTEM ID X'0002'
                                   CHANNEL COMMAND CHAINS
                   ......SEARCH/READ.....  .........WRITE........     DASD
                         TOTAL  CACHE READ       TOTAL CACHE WRITE  FAST WRITE
REQUESTS
  NORMAL                    11           6           5           0           0
  SEQUENTIAL                 0           0           0           0           0
  CACHE FAST WRITE           1           1         210         210         N/A
TOTALS                      12           7         215         210           0
REQUESTS                      COMMAND CHAINS
  INHIBIT CACHE LOADING                  0
  BYPASS CACHE                           5
TRANSFER OPERATIONS           DASD/CACHE   CACHE/DASD
  NORMAL                                 5           0
  SEQUENTIAL                             0         N/A
DASD FAST WRITE RETRIES                  0
DEVICE STATUS     CACHING:         ACTIVE
                  DASD FAST WRITE: DEACTIVATED
                  DUPLEX PAIR:     NOT ESTABLISHED
```

Figure 71. Sample Subsystem Counters Report for the IBM 3990 Model 3

The report in Figure 72 on page 151 is the corresponding legend of Figure 71.

```
                    LEGEND
          SUBSYSTEM COUNTERS LEGEND
VOLUME          - VOLUME SERIAL NUMBER FOR WHICH THE DATA IS GATHERED
DEVICE ID       - CHANNEL CONNECTION ADDRESS OF THE DEVICE ON WHICH
                  THE I/O WAS DONE
SUBSYSTEM ID    - SUBSYSTEM TO WHICH THE DEVICE IS ATTACHED
CHANNEL COMMAND CHAINS - A CCW CHAIN WHICH INCLUDES A SEEK OR LOCATE
                  COMMAND AND AT LEAST ONE SEARCH, READ OR WRITE
                  COMMAND
  SEARCH/READ   - CCW CHAINS WHICH CONTAIN AT LEAST ONE SEARCH OR
                  READ BUT NO WRITE CCW
  WRITE         - CCW CHAINS CONTAINING AT LEAST ONE WRITE
  DASD FAST WRITE - CCW CHAINS CONTAINING A SEARCH, READ OR WRITE WHICH
                  DO NOT INHIBIT DASD FAST WRITE
  TOTAL         - ALL SEARCH/READ CCW CHAINS
  CACHE READ    - CCW CHAINS WHICH REQUIRED NO DATA TO BE MOVED
                  TO/FROM THE DASD
  TOTAL         - ALL WRITE CCW CHAINS
  CACHE WRITE   - CCW CHAINS WHICH REQUIRED NO DATA MOVEMENT TO/FROM
                  THE DASD
 NORMAL         - CCW CHAINS WHICH DO NOT INCLUDE A DEFINE EXTENT CCW
                  OR SPECIFY NORMAL CACHE REPLACEMENT IN THE DEFINE
                  EXTENT CCW
 SEQUENTIAL     - CCW CHAINS WHICH SPECIFY SEQUENTIAL ACCESS IN THE
                  DEFINE EXTENT CCW
 CACHE FAST WRITE - CCW CHAINS WHICH SPECIFY CACHE FAST WRITE ACCESS IN
                  THE DEFINE EXTENT CCW
TOTALS          - TOTAL FOR EACH VERTICAL LINE ITEM
INHIBIT CACHE LOADING - CCW CHAINS WHICH SPECIFY INHIBIT CACHE LOADING
                  IN THE DEFINE EXTENT CCW
BYPASS CACHE    - CCW CHAINS WHICH SPECIFY THE BYPASS CACHE ATTRIBUTE
                  IN THE DEFINE EXTENT CCW
TRANSFER OPERATIONS - THE NUMBER OF DATA PROMOTION OPERATIONS WHICH MOVE
                  DATA
 DASD/CACHE     - THE NUMBER OF TRANSFER OPERATIONS WHICH MOVE DATA
                  FROM THE DASD TO THE CACHE
 CACHE/DASD     - THE NUMBER OF TRANSFER OPERATIONS WHICH MOVE DATA
                  FROM THE CACHE TO DASD
  NORMAL        - DATA MOVEMENT OPERATIONS EXCLUDING SEQUENTIAL
  SEQUENTIAL    - 'NEXT TRACK' DATA MOVEMENT OPERATIONS IN SEQUENTIAL
                  ACCESS MODE
DASD FAST WRITE RETRIES - NUMBER OF RETRIES REQUIRED BEFORE SPACE WAS
                  AVAILABLE IN THE NVS FOR DASD FAST WRITE DATA
```

Figure 72 (Part 1 of 2). Subsystem Counters Report Legend for the IBM 3990 Model 3

```
                    LEGEND
            SUBSYSTEM COUNTERS LEGEND

DEVICE STATUS     - STATUS OF THE ADDRESSED DEVICE FOR THE FOLLOWING
  CACHING         - THE DEVICE CACHING STATE, ONE OF THE FOLLOWING
    ACTIVE        - CACHING ACTIVATED
    DEACTIVATION PENDING - TRANSFER OF MODIFIED DATA TO DASD FAILED
    DEACTIVATED   - CACHING DEACTIVATED
  DASD FAST WRITE - THE STATE OF THE FAST WRITE DATA WHICH WILL BE
                    STORED ON DASD, IS ONE OF THE FOLLOWING
    ACTIVE        - DASD FAST WRITE IS ALLOWED
    DEACTIVATION PENDING - TRANSFER OF MODIFIED DATA TO DASD FAILED
    DEACTIVATED   - DASD FAST WRITE IS DISABLED
  DUPLEX PAIR     - THE SIMPLEX/DUPLEX STATUS OF THE DEVICE WITH THE
                    STATE OF THE PAIR WHEN DUPLEX
    NOT ESTABLISHED - DEVICE IS SIMPLEX
    PRIMARY       - DEVICE IS THE PRIMARY OF A DUPLEX PAIR
    SECONDARY     - DEVICE IS THE SECONDARY OF A DUPLEX PAIR
      ACTIVE      - DUPLEX PAIR AVAILABLE
      PENDING     - COPY TO ESTABLISH A DUPLEX PAIR IN PROGRESS
      SUSPENDED   - SUSPENDED DUPLEX BY HOST COMMAND OR BY SUBSYSTEM
   ADDRESS OF PRIMARY|SECONDARY - CHANNEL CONNECTION ADDRESS OF THE
                    OTHER DEVICE IN THE DUPLEX PAIR
  PINNED DATA EXISTS - ONE OR MORE TRACKS FOR THIS VOLUME ARE PINNED
****              - INDICATION OF AN INVALID OR UNDEFINED BIT
                    COMBINATION IN THE DEVICE STATUS BYTES
```

Figure 72 (Part 2 of 2). Subsystem Counters Report Legend for the IBM 3990 Model 3

Status Report

The Subsystem Status Report provides a record of the status within the subsystem at the time the report is requested. This report includes:

- Volume serial number and address of the device on which I/O was done.
- The identifier of the subsystem.
- Amount of subsystem storage that is CONFIGURED, AVAILABLE, OFFLINE, and PINNED.[1]
- 40 bytes of hexadecimal data representing subsystem status as it is returned from the subsystem before it is interpreted.

Figure 73 on page 153 is a sample Subsystem Status Report for the IBM 3990 Model 3.

[1] The sum of AVAILABLE, PINNED, and OFFLINE is always less than CONFIGURED. The difference is the amount of storage occupied by control data and the space remaining after the storage director has allocated as many track slot segments as possible from the subsystem storage space which is not occupied by subsystem control data.

```
                  3990 STORAGE CONTROL  MODEL 03
                   3380 SUBSYSTEM STATUS REPORT
                  VOLUME 3380E3   DEVICE ID X'E3'
                       SUBSYSTEM ID X'0002'
                  ...............CAPACITY IN BYTES..............
                  SUBSYSTEM STORAGE            NONVOLATILE STORAGE
CONFIGURED                 33554432                        2097152
AVAILABLE                  33243136                            N/A
PINNED                            0                              0
OFFLINE                           0                            N/A
RETURNED STATUS:  0-19 00E32001 00800000 00000200 000001FB 40000000
                 20-39 00000000 00003000 00200000 00000000 00000002
SUBSYSTEM CACHING STATUS:  ACTIVE
SD CACHING CONDITIONS:     CACHE FAST WRITE ACTIVE
NVS STATUS:                DEACTIVATED-HOST COMMAND
DEVICES WITH STATISTICS:   32
STATISTIC SETS/DEVICE:     1
DEVICE STATUS
  FOR DEVICE ID X'E3'      CACHING:         ACTIVE
                           DASD FAST WRITE: DEACTIVATED
                           DUPLEX PAIR:     NOT ESTABLISHED
```

Figure 73. Sample Subsystem Status Report for the IBM 3990 Model 3

The report in Figure 74 on page 154 is the corresponding legend of Figure 73.

```
                    LEGEND
                SUBSYSTEM STATUS LEGEND
VOLUME        - VOLUME SERIAL NUMBER FOR WHICH THE DATA IS GATHERED
DEVICE ID     - CHANNEL CONNECTION ADDRESS OF THE DEVICE ON WHICH THE
            I/O WAS DONE
SUBSYSTEM ID  - SUBSYSTEM TO WHICH THE DEVICE IS ATTACHED
CAPACITY IN BYTES
 SUBSYSTEM STORAGE - RANDOM ACCESS STORAGE
 NONVOLATILE STORAGE - RANDOM ACCESS STORAGE WITH A BACKUP POWER SOURCE
  CONFIGURED - THE AMOUNT OF STORAGE THAT EXISTS IN THE CACHE FOR
            THIS SUBSYSTEM
  AVAILABLE  - THE AMOUNT OF STORAGE THAT IS AVAILABLE FOR CACHING
  PINNED     - STORAGE UNAVAILABLE BECAUSE OF CACHE TO DASD EXCEPTIONS
  OFFLINE    - THE AMOUNT OF STORAGE THAT IS OFFLINE BECAUSE OF A
            HOST OR SUBSYSTEM ERROR
RETURNED STATUS - THE HEXADECIMAL DATA AS RETURNED FROM THE STORAGE
            DIRECTOR RESULTING FROM A SENSE STATUS COMMAND
SUBSYSTEM CACHING STATUS - OVERALL STATE OF THE SUBSYSTEM
  ACTIVE     - SUBSYSTEM STORAGE IS ONLINE
  ACTIVATION IN PROCESS - CACHE IS IN THE PROCESS OF BEING BROUGHT
            ONLINE
  DEACTIVATED-SUBSYSTEM ERROR - AN INTERNAL SUBSYSTEM ERROR OCCURRED
            WHICH CAUSED TERMINATION OF CACHING
  DEACTIVATED-HOST COMMAND - CACHING DEACTIVATED AS A RESULT OF AN
            EXPLICIT HOST SYSTEM REQUEST
  DEACTIVATION IN PROGRESS - A COMMAND REQUESTING DEACTIVATION HAS
            BEEN RECEIVED, AND THE DESTAGE IS IN PROGRESS
  DEACTIVATION FAILED - A COMMAND REQUESTING DEACTIVATION HAS BEEN
            RECEIVED, BUT THE DESTAGE FAILED
SD CACHING STATUS - CONDITION OF THE STORAGE DIRECTOR RECEIVING THE
            SENSE STATUS COMMAND
  SUBSYSTEM DISABLED - SUBSYSTEM STORAGE IS DISABLED FOR MAINTENANCE
  DEVICE UNAVAILABLE - IML DEVICE NOT AVAILABLE
  CACHE FAST WRITE DISABLED - DATA WRITTEN TO THE SUBSYSTEM CACHE AND
            NOT PERMANENTLY TRANSFERRED TO DASD IS DISABLED
  CACHE FAST WRITE ACTIVE - DATA WRITTEN TO THE SUBSYSTEM CACHE AND
            NOT PERMANENTLY TRANSFERRED TO DASD IS ACTIVE
NVS STATUS    - STATE OF THE NONVOLATILE STORAGE
  ACTIVE     - NONVOLATILE STORAGE IS ACTIVE
  DEACTIVATED-SUBSYSTEM ERROR - AN INTERNAL SUBSYSTEM ERROR OCCURRED
            WHICH CAUSED TERMINATION OF THE NONVOLATILE STORAGE
            AVAILABILITY
```

Figure 74 (Part 1 of 2). Subsystem Status Report Legend for the IBM 3990 Model 3

```
                    LEGEND
                SUBSYSTEM STATUS LEGEND

   DEACTIVATED-HOST COMMAND - NONVOLATILE STORAGE DEACTIVATED AS A
            RESULT OF AN EXPLICIT HOST SYSTEM REQUEST
   DEACTIVATION IN PROGRESS - A COMMAND REQUESTING DEACTIVATION HAS
            BEEN RECEIVED, AND THE DESTAGE IS IN PROGRESS
   DEACTIVATION FAILED - A COMMAND REQUESTING DEACTIVATION HAS BEEN
            RECEIVED, BUT THE DESTAGE FAILED
   DISABLED   - NVS IS DISABLED FOR MAINTENANCE
 DEVICES WITH STATISTICS - THE NUMBER OF DEVICES FOR WHICH THE SUBSYSTEM
            IS MAINTAINING STATISTICS
 STATISTIC SETS/DEVICE - NUMBER OF SETS OF STATISTICS WHICH ARE MAINTAINED
            FOR EACH DEVICE
 DEVICE STATUS
  FOR DEVICE ID - CHANNEL CONNECTION ADDRESS OF THE DEVICE WITH THE
            FOLLOWING STATUS
   CACHING    - THE DEVICE CACHING STATE, ONE OF THE FOLLOWING
     ACTIVE   - CACHING ACTIVATED
     DEACTIVATION PENDING - TRANSFER OF MODIFIED DATA TO DASD FAILED
     DEACTIVATED - CACHING DEACTIVATED
   DASD FAST WRITE - THE STATE OF THE FAST WRITE DATA WHICH WILL BE
            STORED ON DASD, IS ONE OF THE FOLLOWING
     ACTIVE   - DASD FAST WRITE IS ALLOWED
     DEACTIVATION PENDING - TRANSFER OF MODIFIED DATA TO DASD FAILED
     DEACTIVATED - DASD FAST WRITE IS DISABLED
   DUPLEX PAIR - THE SIMPLEX/DUPLEX STATUS OF THE DEVICE WITH THE STATE
            OF THE PAIR WHEN DUPLEX
     NOT ESTABLISHED - DEVICE IS SIMPLEX
     PRIMARY  - DEVICE IS THE PRIMARY OF A DUPLEX PAIR
     SECONDARY - DEVICE IS THE SECONDARY OF A DUPLEX PAIR
       ACTIVE - DUPLEX PAIR IS AVAILABLE
       PENDING - COPY TO ESTABLISH A DUPLEX PAIR IS IN PROGRESS
       SUSPENDED - SUSPENDED DUPLEX BY HOST COMMAND OR BY SUBSYSTEM
   ADDRESS OF PRIMARY|SECONDARY - CHANNEL CONNECTION ADDRESS OF THE OTHER
            DEVICE IN THE DUPLEX PAIR
   PINNED DATA EXISTS - ONE OR MORE TRACKS FOR THIS VOLUME ARE PINNED
 ****       - INDICATION OF AN INVALID OR UNDEFINED BIT COMBINATION
            IN THE RETURNED STATUS BYTES
```

Figure 74 (Part 2 of 2). Subsystem Status Report Legend for the IBM 3990 Model 3

SETCACHE (Basic Function)

Use the SETCACHE command with the 3990 Model 3 to:

- Make an addressed device (actuator) eligible or not eligible for caching operations.
- Make subsystem storage available or not available to the subsystem for caching operations.

The format of the SETCACHE command is:

SETCACHE	{**FILE(***ddname***)**|**VOLUME(***volser***)** + **UNIT(***unittype***)**} **[DEVICE|SUBSYSTEM]** **[ON|OFF]**

SETCACHE can be abbreviated: SETC

Required Parameters

FILE(*ddname***)**|**VOLUME(***volser***) UNIT** + **(***unittype***)**
specifies the device within the subsystem.

FILE(*ddname***)**
specifies the name of a DD statement that identifies the unit and volume of a device within the subsystem. For *ddname*, substitute the name of the DD statement identifying the device type.

VOLUME(*volser***)**
specifies the volume serial number of a volume within the subsystem. For *volser*, substitute the volume serial number of the volume.

Abbreviation: VOL

UNIT(*unittype***)**
specifies the unit type of the subsystem.

Optional Parameters

DEVICE|SUBSYSTEM

specifies whether access to a particular device or to the entire subsystem cache be allowed or prohibited.

DEVICE

specifies that access to the cache of a particular device is allowed or prohibited.

Abbreviation: DEV

SUBSYSTEM

specifies that access to the entire subsystem cache is allowed or prohibited.

Abbreviation: SSYS or SUBSYS

ON|OFF

specifies whether access to the cache be allowed or prohibited.

ON

specifies that access to the cache be allowed.

OFF

specifies that access to the cache be prohibited.

Note: Setting subsystem cache on or off and setting cache for a device on or off are independent operations. That is, cache for individual devices can be set on or off whether the subsystem cache is on or off. However, if the subsystem cache is set off, setting cache on for an individual device on has no effect until the subsystem cache is set on.

Examples of Using SETCACHE to Manage Cache Storage (Basic Function)

Allowing Access to the Cache for a Particular Device

In this example, access to the cache is allowed for a particular device.

```
//SETCACHE  JOB   ...
//STEP1     EXEC  PGM=IDCAMS
//SET01     DD    UNIT=3380,VOL=SER=VOL123,DISP=SHR
//SYSPRINT  DD    SYSOUT=A
//SYSIN     DD    *
  SETCACHE-
   FILE(SET01)-
   DEVICE-
   ON
/*
```

Job control language statement:

- SET01 DD, which specifies a 3380 unit for which access to the cache be allowed, and specifies volume VOL123.

The SETCACHE command parameters are:

- FILE, which specifies SET01 as the DD statement that allocates a 3380 unit and volume VOL123.
- DEVICE, which specifies that access to a single device is affected.
- ON, which specifies that access to the cache be allowed.

Allowing Access to the Cache for an Entire Subsystem

In this example, access to the cache is allowed for an entire subsystem.

```
//SETCACHE  JOB   ...
//STEP1     EXEC  PGM=IDCAMS
//SYSPRINT  DD    SYSOUT=A
//SYSIN     DD    *
  SETCACHE-
   VOLUME(VOL002)-
   UNIT(3380)-
   SUBSYSTEM-
   ON
/*
```

The SETCACHE command parameters are:

- VOLUME, which specifies volume VOL002.
- UNIT, which specifies a 3380 unit.
- SUBSYSTEM, which specifies that cache access is affected for all devices in the subsystem that contains volume VOL002.
- ON, which specifies that access to the cache is allowed.

Prohibiting Access to the Cache for a Particular Device

In this example, access to the cache is prohibited for a particular device.

```
//SETCACHE  JOB   ...
//STEP1     EXEC  PGM=IDCAMS
//SET01     DD    UNIT=3380,VOL=SER=VOL123,DISP=SHR
//SYSPRINT  DD    SYSOUT=A
//SYSIN     DD    *
  SETCACHE-
   FILE(SET01)-
   DEVICE-
   OFF
/*
```

Job control language statement:

- SET01 DD, which specifies a 3380 unit for which the caching is to be deactivated, and specifies volume VOL123.

The SETCACHE command parameters are:

- FILE, which specifies SET01 as the DD statement that allocates a 3380 unit and volume VOL123.
- DEVICE, which specifies that cache access for a single device is affected.
- OFF, which specifies that access to the cache is to be prohibited.

Chapter 12. Installation and Storage Administration Under VM

Minimum VM Program Levels for 3990 Model 1 and 2 Support

For VM support of the 3990 Model 1 and 3990 Model 2, the minimum release level of programs, **with the appropriate PTFs**, required to support 3990 Model 1 and 2 basic operations includes:

- VM/XA SP Release 1.0
- VM/XA SF Release 2.0
- VM/SP HPO Release 4.2
- VM/SP Release 4.0
- EREP Version 3 Release 3.2
- Device Support Facility (ICKDSF) Release 9.0.

VM Software Capabilities for 3990 Model 3 Basic Caching

Basic caching support for the 3990 Model 3 will be provided by a future release of VM/SP HPO and a future release of VM/XA SP. Cache fast write is supported for guest VM/SP HPO operating systems. For information on how to use cache fast write for guest operating systems, see the *VM/SP HPO Release 5 CP Support for the IBM 3990 Storage Control Model 3*.

Supported Channel Commands and Data Formats

The command set of the 3990 supports the count, key, and data (CKD) data format, and the CKD and extended count, key, and data (ECKD) command sets used for 3380 disk storage operations. The command sets are described in *IBM 3990 Storage Control Reference*.

Defining the Subsystem to VM for Basic Caching Support

Before you can use the 3990 subsystem, you must identify it to VM. Do this before you install the subsystem, so that you can test the configuration definition in advance.

Defining the subsystem to VM takes the following steps:

1. Assign I/O addresses or VM/XA device numbers to the new units.
2. Define the units to VM (by updating the real I/O configuration macros in DMKRIO, for VM/SP and VM/SP HPO, or in HCPRIO for VM/XA.
3. Define the units to the processor (by running the I/O Configuration Program for VM, if necessary).

These steps are described in more detail in the following paragraphs.

Assigning I/O Addresses or Device Numbers

VM/SP and VM/SP HPO systems use *I/O addresses* to identify each device (volume) in the 3380 units. VM/XA uses *device numbers* to accomplish the same purpose. In either case, **physical device addresses** identify each DASD actuator to the DASD controllers and to the 3990.

You need to assign I/O addresses or device numbers for all the devices (actuators) in your subsystem and supply these addresses or numbers to VM. You also need to provide physical device addresses and storage director control unit addresses to your service representative so that the 3990 and 3380 units can be set to recognize them.

If you plan to install more 3380 units in the future, you may want to assign their addresses or numbers now. You can define these units to VM during the configuration definition process. During IPL, VM marks the units that are not installed as offline.

VM/SP and VM/SP HPO use the I/O address to identify both a 3380 device and the channel path used to reach it; thus, a given 3380 device can have several different addresses, one for each path by which it can be reached.

VM/XA uses the device number to identify a 3380 device only; the channel path is selected dynamically by the channel subsystem, so there is no specific path identifier within the device number.

See Chapter 7, "Planning the Physical Configuration" on page 87 for details on assigning device addresses for DLSE or DLS mode.

Defining the Real I/O Configuration to VM

The I/O configuration file (in VM/SP and VM/SP HPO, called DMKRIO; in VM/XA, called HCPRIO) consists of macros that describe the I/O devices, storage control units, and channels attached to the real processor. Because VM uses this information to schedule I/O and to allocate resources, the macro entries in the real I/O configuration file must accurately represent the real I/O hardware configuration.

If you are adding new devices or changing hardware configurations, you must update the real I/O configuration file to include the new devices. For nondisruptive install of 4-path 3380 Models AJ4 and AK4, you must do this before installing the new strings.

Note: Once the real I/O configuration file is updated to reflect the new devices, the corresponding device control blocks (RDEVBLOK, RCUBLOK, and RCHBLOK) occupy space in real storage, regardless of whether the devices are actually installed. If you have severe real storage limitations, you may want to delay updating the real I/O configuration file until shortly before device installation.

The following real I/O configuration macros are relevant to 3380 strings:

- RDEVICE generates a real device block.
- RCTLUNIT generates a real control unit block.
- RCHANNEL generates a real channel block.

For VM/XA systems, only the RDEVICE macro is valid. For complete information on parameter combinations and restrictions, see the appropriate VM manual:

VM/SP	All releases	*VM/SP Planning Guide and Reference*
VM/SP HPO	All releases	*VM/SP HPO Planning Guide and Reference*
VM/XA SF	All releases	*VM/XA SF Installation, Administration, and Service*
VM/XA SP	All releases	*VM/XA SP Installation, Administration, and Service*

Defining the I/O Configuration to the Processor in VM

For System/370 extended architecture processors (the 308x or 3090 in any mode, or the 4381 in extended architecture mode), you must run the I/O Configuration Program (IOCP) to define the I/O configuration to the processor if you are adding new devices or changing hardware configurations.

Invoke the CMS version of IOCP to generate a new input/output configuration data set.

Note: To take advantage of the nondisruptive install capabilities of the 3380 Enhanced Subsystem Models, you must pre-define addresses for the devices that you plan to install.

VM IOCP Examples

DLSE Mode

In DLSE mode, the two storage paths in a cluster operate as a multipath storage director. To the host operating system **AND** to the channel subsystem, this cluster appears to be a storage director, with a single address. In other words, to the channel subsystem a multipath storage director looks just like a 3880 storage director. The fact that there are two storage paths within the multipath storage director is transparent to the operating system and the channel subsystem. The microcode in the 3990 selects which of the two storage paths is used to complete a given I/O operation. A Control Unit Busy condition is returned to the host **ONLY** when both storage paths within the multipath storage director are busy. When at least two channels are attached to each multipath storage director, four data transfer operations can concurrently take place within the attached four-path strings of DASD.

A DLSE mode subsystem can be described with one, two, or four CNTLUNIT macros. We recommend two, one for each multipath storage director. There is no advantage to four, and conceivably in certain cases it could cause additional

overhead. The order of path selection is affected by the number of CNTLUNIT macros that are used. If two are used, the channel subsystem alternates between the two storage directors, but if both are busy, the channel subsystem will try the second path on the first storage director and then if necessary the second path on the second storage director.

DLS Mode

IOCP and VM GEN (DMKRIO) are exactly the same as they are for 3880s. For addressing and channel accesses, a 3990 single path storage director is functionally equivalent to a 3880 storage director.

A 3990 Model 1 is described exactly the same as a single frame 3880 Model 3.

A 3990 Model 2 or Model 3 is described exactly as a cross-configured pair of 3880 Model 3s (or a dual-framed pair of 3880 Model 23s).

Note: It is possible to IOCP gen a 3880 Storage Control with one or two CNTLUNIT macros; we recommend two. Also, each logical DASD subsystem in a DLS mode 3990 can be described with one or two CNTLUNIT macros; we recommend two.

IOCP Examples

The IOCP examples following are arranged in this order:

1. VM/XA DLSE
2. VM/XA DLS
3. VM/370 DLSE
4. VM/370 DLS

The following set of configurations and IOCP examples illustrate some of the many possible 3990 configurations. Possible variations include DLSE/DLS mode, XA or S/370, partitioned processors or single image systems, multiprocessors or uniprocessors (S/370), and number of channels attached. The 3990 Model 1 examples have not been included; they are identical to single frame 3880 configurations and IOCPs. The 3990 Model 2 and Model 3 configurations shown are representative configurations.

The physical cabling from the 3990 to the DASD A-units must adhere to the diagrams contained in Appendix B, "3990 Configuration Planning Worksheets" on page 189.

In DLS mode, the two single path storage directors in one cluster may attach to the same or different channels. In the 3990 in DLS mode, the connection of a single path storage director to a channel interface is defined in the Vital Products Data, and not accomplished with a cable as in the case of the 3880.

Note: All of the examples shown describe ONLY the IOCP statements required.

VM/XA DLSE IOCP Example

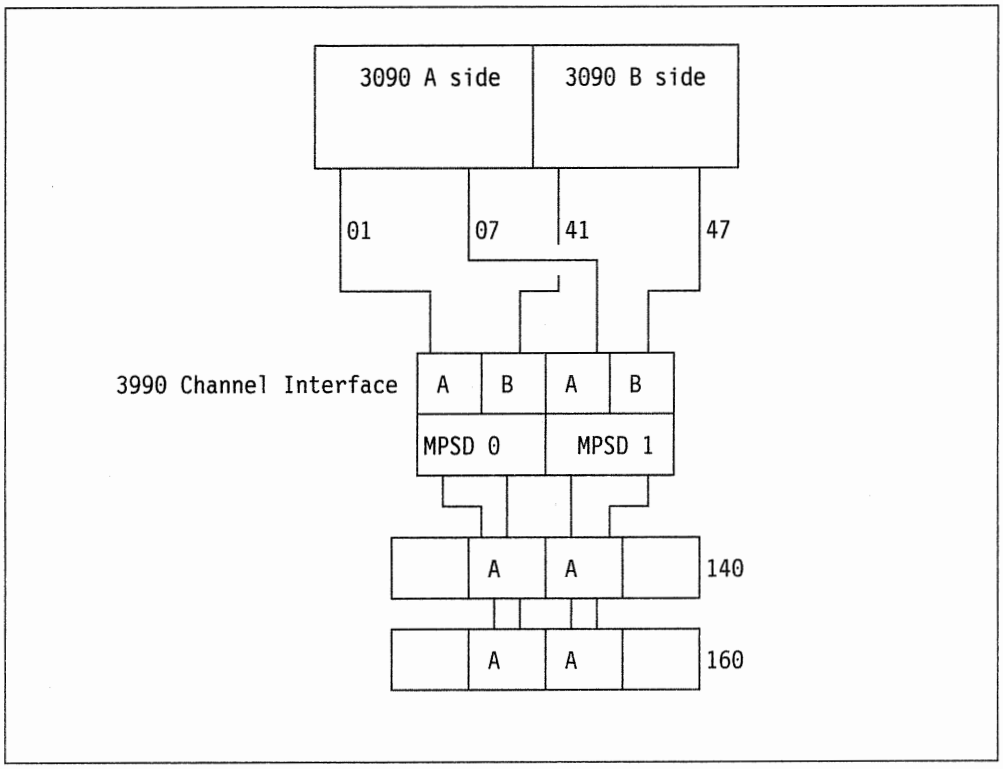

Figure 75. VM/XA, DLSE, 4 Channel Paths, 3090-400

The IOCP for this configuration:

```
CHPID01 CHPID PATH=(01,07,41,47),TYPE=BL
MPSD0 CNTLUNIT CUNUMBR=008,PATH=(01,41),PROTOCL=S4,SHARED=N,
        UNIT=3990,UNITADD=((40,64))
MPSD1 CNTLUNIT CUNUMBR=009,PATH=(07,47),PROTOCL=S4,
        SHARED=N,UNIT=3990,UNITADD=((40,64))
DLSEDASD IODEVICE ADDRESS=(140,64),CUNUMBR=(008,009),
          UNIT=3380
```

VM/XA DLS IOCP Examples

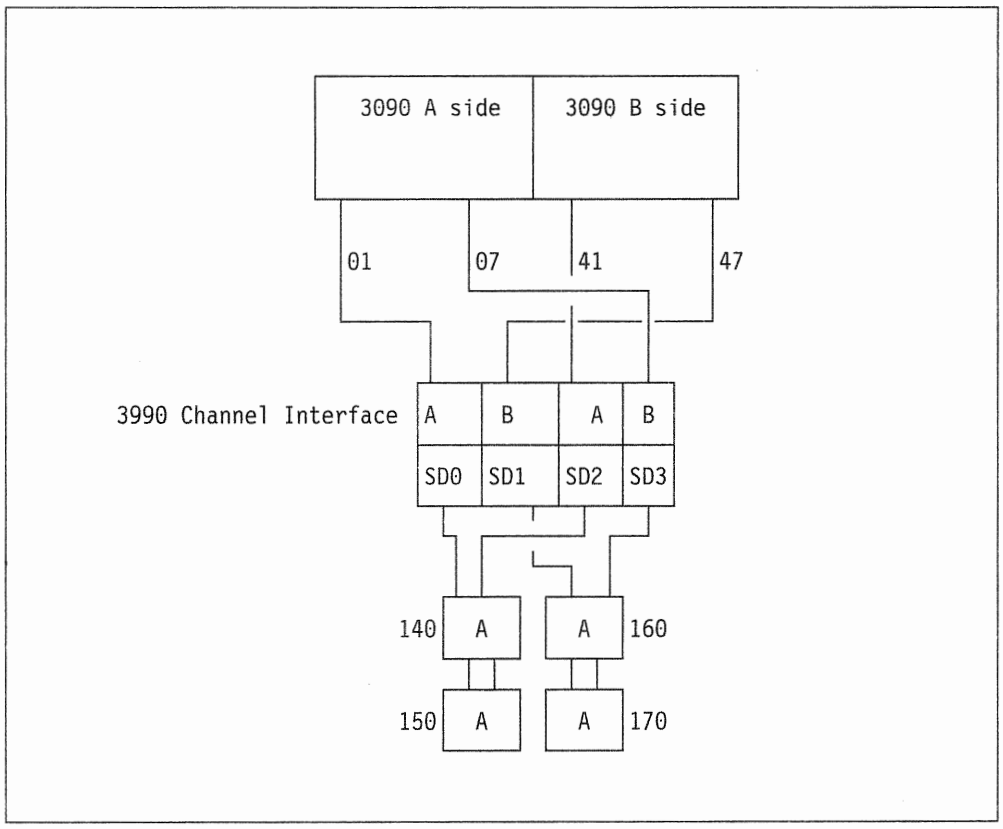

Figure 76. VM/XA, DLS, 4 Channel Paths, 3090-400 Two Channel Paths To Each Logical DASD Subsystem

The IOCP for this configuration:

```
CHPID01 CHPID PATH=(01,07,41,47),TYPE=BL
SPSD0 CNTLUNIT CUNUMBR=002,PATH=(01),PROTOCL=S4,SHARED=N,
        UNIT=3990,UNITADD=((40,32))
SPSD2 CNTLUNIT CUNUMBR=004,PATH=(41),PROTOCL=S4,
        SHARED=N,UNIT=3990,UNITADD=((40,32))
DLSDASD1 IODEVICE ADDRESS=(140,32),CUNUMBR=(002,004),
          UNIT=3380
SPSD1 CNTLUNIT CUNUMBR=003,PATH=(47),PROTOCL=S4,SHARED=N,
        UNIT=3990,UNITADD=((60,32))
SPSD3 CNTLUNIT CUNUMBR=005,PATH=(07),PROTOCL=S4,
        SHARED=N,UNIT=3990,UNITADD=((60,32))
DLSDASD2 IODEVICE ADDRESS=(160,32),CUNUMBR=(003,005),
          UNIT=3380
```

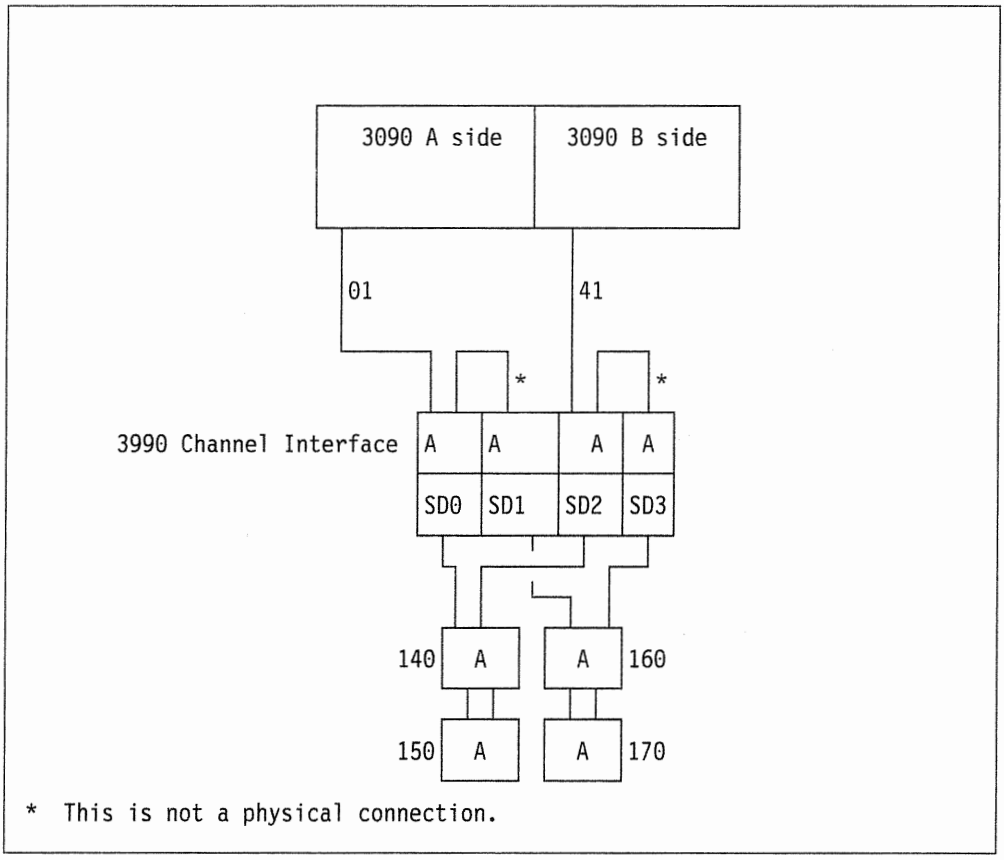

Figure 77. VM/XA, DLS, 2 Channel Paths, 3090-400 Two Channel Paths To Each Logical DASD Subsystem

The IOCP for this configuration:

```
CHPID01 CHPID PATH=(01,41),TYPE=BL
SPSD0 CNTLUNIT CUNUMBR=007,PATH=(01),PROTOCL=S4,SHARED=N,
        UNIT=3990,UNITADD=((40,32))
SPSD2 CNTLUNIT CUNUMBR=009,PATH=(41),PROTOCL=S4,
        SHARED=N,UNIT=3990,UNITADD=((40,32))
DLSDASD1 IODEVICE ADDRESS=(140,32),CUNUMBR=(007,009),
          UNIT=3380
SPSD1 CNTLUNIT CUNUMBR=008,PATH=(01),PROTOCL=S4,SHARED=N,
        UNIT=3990,UNITADD=((60,32))
SPSD3 CNTLUNIT CUNUMBR=010,PATH=(41),PROTOCL=S4,
        SHARED=N,UNIT=3990,UNITADD=((60,32))
DLSDASD2 IODEVICE ADDRESS=(160,32),CUNUMBR=(008,010),
          UNIT=3380
```

VM/370 DLSE IOCP Examples

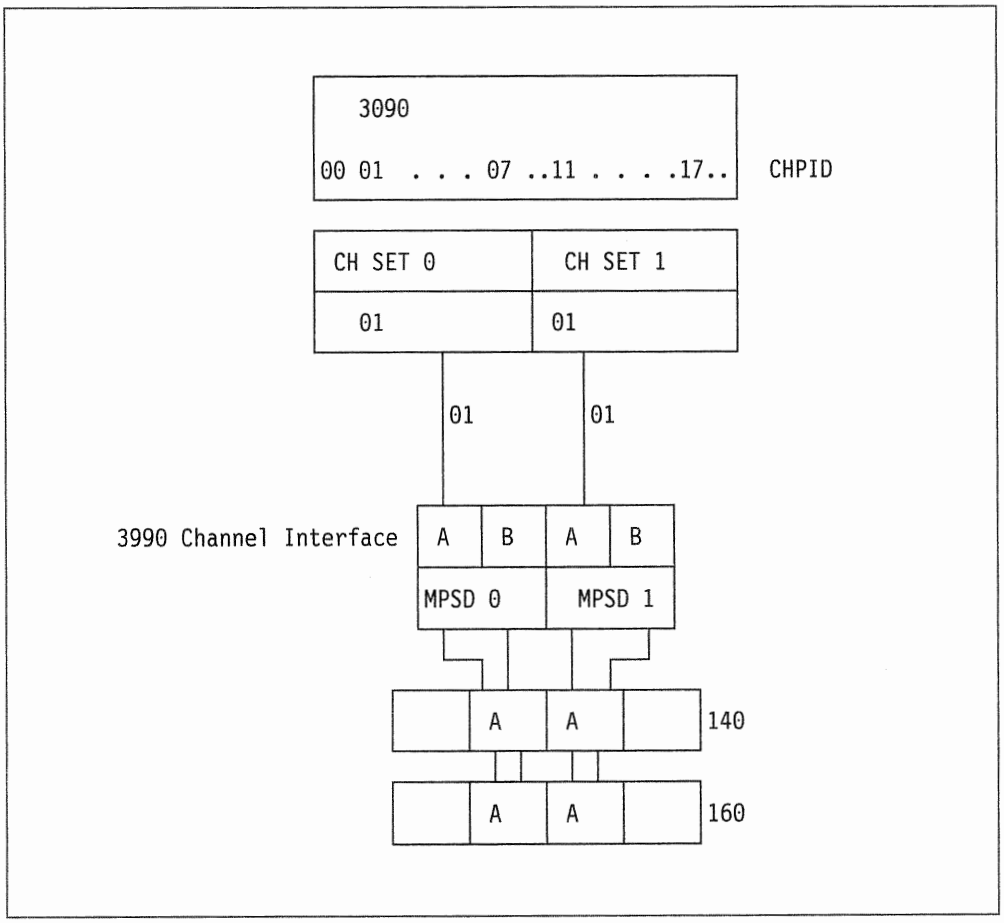

Figure 78. VM/370 DLSE, 2 Channel Paths, 3090-200 or 400 in Partitioned Mode

The IOCP for this configuration:

```
CHPID01 CHPID PATH=((01,01,0),(11,01,1)),TYPE=BL
MPSD0 CNTLUNIT CUNUMBR=043,PATH=(01),PROTOCL=S4,SHARED=N,
        UNIT=3990,UNITADD=((40,64))
MPSD1 CNTLUNIT CUNUMBR=044,PATH=(11),PROTOCL=S4,
        SHARED=N,UNIT=3990,UNITADD=((40,64))
DLSEDASD IODEVICE ADDRESS=(140,64),CUNUMBR=(043,044),
          UNIT=3380
```

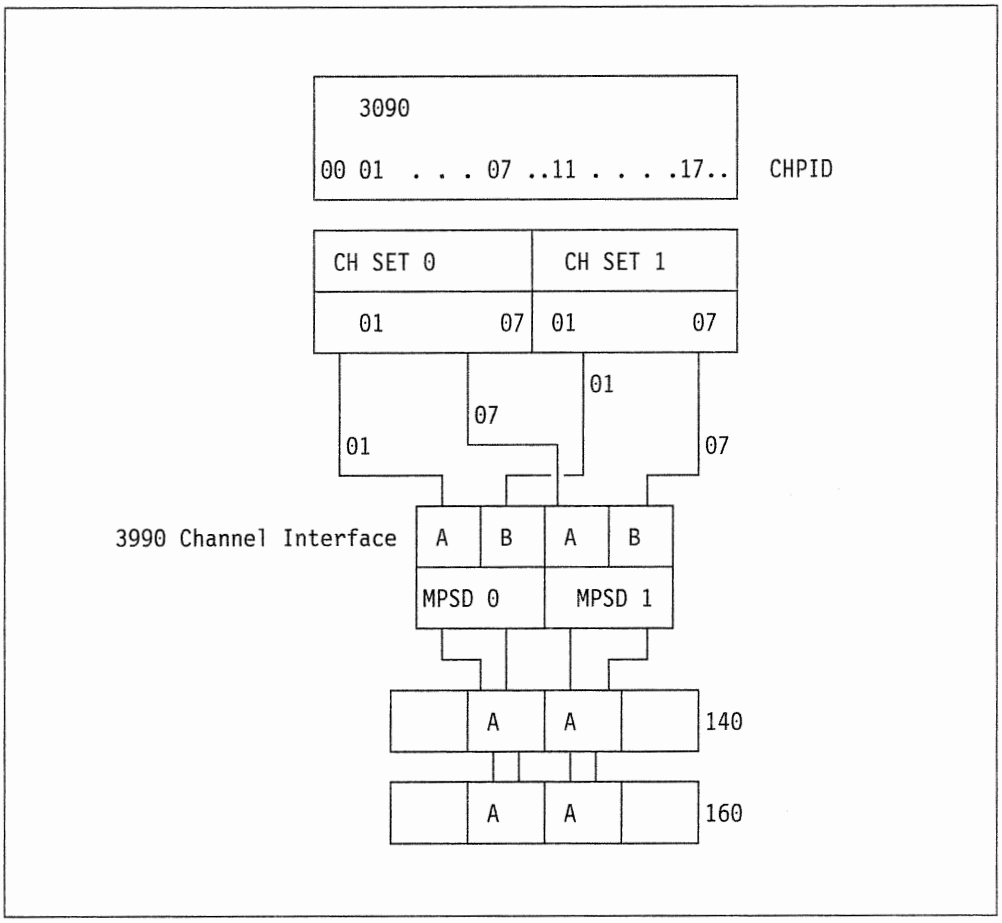

Figure 79. VM/370 DLSE, 4 Channel Paths, 3090-200or 400 in Partitioned Mode

The IOCP for this configuration:

```
CHPID01 CHPID PATH=((01,01,0),(07,07,0),(11,01,1),(17,07,1)),TYPE=BL
MPSD0 CNTLUNIT CUNUMBR=043,PATH=(01,11),PROTOCL=S4,SHARED=N,
        UNIT=3990,UNITADD=((40,64))
MPSD1 CNTLUNIT CUNUMBR=044,PATH=(07,17),PROTOCL=S4,
        SHARED=N,UNIT=3990,UNITADD=((40,64))
DLSEDASD IODEVICE ADDRESS=(140,64),CUNUMBR=(043,044),
          UNIT=3380
```

Note: In this example, RDEVICE macros can be in such a way as to allow for balancing the I/O activity across the storage paths. See Figure 81 on page 171 for an example.

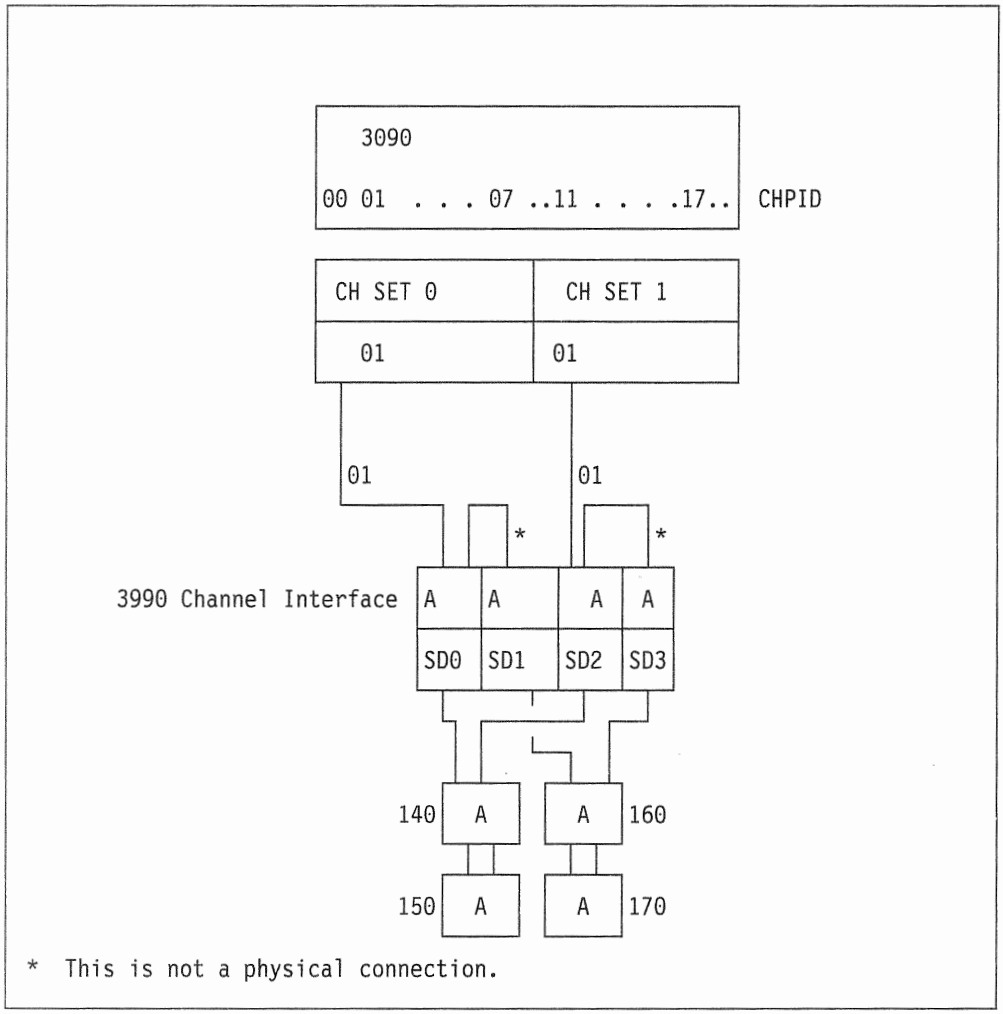

Figure 80. VM/370, DLS, 2 Channel Paths, 3090-200 Multiprocessor Two Channel Paths To Each Logical DASD Subsystem

The IOCP for this configuration:

```
CHPID01 CHPID PATH=((01,01,0),(11,01,1)),TYPE=BL
SPSD0 CNTLUNIT CUNUMBR=007,PATH=(01),PROTOCL=S,SHARED=N,
        UNIT=3990,UNITADD=((40,32))
SPSD2 CNTLUNIT CUNUMBR=009,PATH=(11),PROTOCL=S,
        SHARED=N,UNIT=3990,UNITADD=((40,32))
DLSDASD1 IODEVICE ADDRESS=(140,32),CUNUMBR=(007,009),
          UNIT=3380
SPSD1 CNTLUNIT CUNUMBR=008,PATH=(01),PROTOCL=S,SHARED=N,
        UNIT=3990,UNITADD=((60,32))
SPSD3 CNTLUNIT CUNUMBR=010,PATH=(11),PROTOCL=S,
        SHARED=N,UNIT=3990,UNITADD=((60,32))
DLSDASD2 IODEVICE ADDRESS=(160,32),CUNUMBR=(008,010),
          UNIT=3380
```

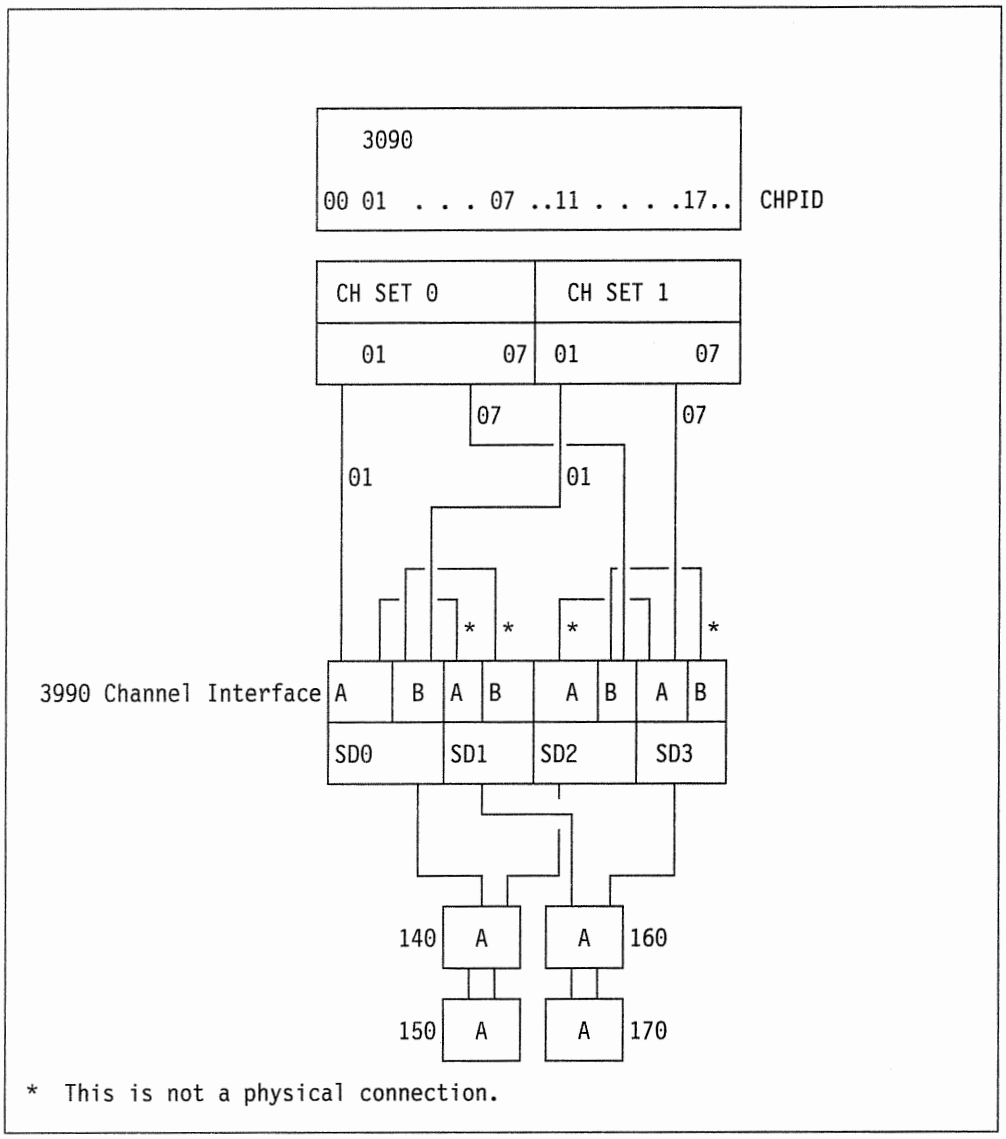

Figure 81. VM/370, DLS, 4 Channel Paths, 3090-200 Multiprocessor Four Channel Paths To Each Logical DASD Subsystem

The IOCP for this configuration:

```
CHPID01 CHPID PATH=((01,01,0),(07,07,0),(17,07,1),(11,01,1)),TYPE=BL
SPSD0 CNTLUNIT CUNUMBR=002,PATH=(01,11),PROTOCL=S4,SHARED=N,
        UNIT=3990,UNITADD=((40,32))
SPSD2 CNTLUNIT CUNUMBR=004,PATH=(07,17),PROTOCL=S4,
        SHARED=N,UNIT=3990,UNITADD=((40,32))
DLSDASD1 IODEVICE ADDRESS=(140,32),CUNUMBR=(002,004),
          UNIT=3380
SPSD1 CNTLUNIT CUNUMBR=003,PATH=(01,11),PROTOCL=S4,SHARED=N,
        UNIT=3990,UNITADD=((60,32))
SPSD3 CNTLUNIT CUNUMBR=005,PATH=(07,17),PROTOCL=S4,
        SHARED=N,UNIT=3990,UNITADD=((60,32))
DLSDASD2 IODEVICE ADDRESS=(160,32),CUNUMBR=(003,005),
          UNIT=3380
```

Note: This configuration could be described with RDEVICE macros in one of two ways:

```
Case 1. RDEVICE ADDRESS=(140,32),DEVTYPE=3380,ALTCU=(740)
     RDEVICE ADDRESS=(160,32),DEVTYPE=3380,ALTCU=(760)

Case 2. RDEVICE ADDRESS=(140,16),DEVTYPE=3380,ALTCU=(740)
     RDEVICE ADDRESS=(160,16),DEVTYPE=3380,ALTCU=(760)
     RDEVICE ADDRESS=(750,16),DEVTYPE=3380,ALTCU=(150)
     RDEVICE ADDRESS=(770,16),DEVTYPE=3380,ALTCU=(170)
```

The advantage of the second case is that it balances the I/O activity across the storage paths.

VM/SP HPO CMS Support

The four major components of a CMS transaction are:

1. Using the host processor
2. Waiting for the processor
3. Waiting for paging I/O
4. Waiting for minidisk I/O.

For most CMS transactions, the processor components (items 1 and 2) are measured in microseconds, while the I/O components (items 3 and 4) are measured in milliseconds (and sometimes seconds). To noticeably improve the end user response time usually requires an improvement in the I/O subsystem.

A single read-only minidisk (for example, S-disk) may be shared among several VM systems. Running VM on several processors allows the installation to use a single copy of the minidisk.

System Description

VM gains control on every guest machine DASD I/O request. There are three ways to request DASD I/O:

1. Diagnose X'18' - Standard DASD I/O

   This is the interface used for most CMS DASD I/O requests.

2. Diagnose X'20' - General I/O

   This interface is used by CMS for DASD I/O that cannot meet the restrictions imposed by Diagnose X'18'.

3. SIO or SIOF

   This is the interface used by non-CMS guests (for example, MVS and VSE).

Storage Administration Under VM

The following headings describe techniques that you can use to improve performance and space utilization of your noncache storage subsystem.

Considerations for Console Message Handlers

Programs that filter and/or route console messages should be reviewed to take into account SIMs and other new messages.

VM Performance

The performance of VM systems depends on many factors: workload, processor speed, channel capacity, communication network speed, and the storage subsystem configuration. The performance factor most obvious to terminal operators is the terminal response time. This factor is affected by all the previous factors. Lower response times increase user productivity, therefore, it is worth taking the time to monitor and improve the performance of the subsystem.

You can accomplish this by setting some response time goals for your system, and using VM/Monitor to determine if you are meeting those goals.

Identifying VM Caching Candidates

In VM, cache may be used for a wide range of applications. Cache provides improved performance and minimized I/O service and response times. System, User, Database, Guest and Spooling volumes and data areas should all be considered as possible candidates for cache.

Many of the best candidates for cache are easily identified. Caching typically improves performance for volumes and minidisks with data that is frequently read. A VMMAP seek analysis will help identify the volumes with high read percentages. Minidisks like the 190 S-disk and 19E Y-disk are excellent candidates because these minidisks are read-only (except during maintenance) and shared by multiple users. These minidisks may even be shared by multiple systems when cached and maintain excellent performance. Minidisks with high read use and sharing can account for 35-50 percent of the total non-paging I/O.

The following types of data typically have high read activity and are good caching candidates:

- CMS S- and Y-minidisks
- Minidisks containing frequently-read programs (such as PROFS or language compilers)
- System areas like the CP directory and saved names tables (saved systems).
- Minidisks that are shared in departments or by many users.

Notes for Guest Systems

Cache storage may be used for guests that do not have native support for cache. VSE is an example of such an operating system. A VSE guest under VM can benefit from the advantages of cache. Minidisks of libraries, application indexes and application data areas are some examples of potential cache candidates. Improvements may be seen for interactive and/or batch applications that are I/O bound.

See *Using the IBM 3380 Direct Access Storage in a VM Environment* for other cache candidates for MVS and other guest systems.

After you select the best data set candidates for cache storage, the cache may have capacity for additional data, such as user and spool volumes. The user and spool data typically has a lower read percentage then the best cache candidates.

The VMMAP seek analysis may identify that some data sets have a high read hit ratio and some minidisks are shared by multiple users. These types of user data sets will perform better when cached than in native mode.

Try different caching configurations and observe the performance changes. You should also consider cache for volumes that show large average seek lengths for data that is heavily used (illustrated, for example, in the SEEKS ANALYSIS: AVG LENGTH NON-0 field of a VMMAP seek analysis). A large seek length indicates that mechanical motion constitutes a significant portion of I/O response time—some of which can be eliminated when using cache.

Using VM/Monitor

VM/Monitor is a component of VM which collects data on performance and resource utilization. It allows you to set up monitoring classes which control the type of statistics collected, and the sampling interval at which the data is collected. The monitoring classes are:

PERFORM: collects data for the entire system.

USER: collects data for the individual users.

DASTAP: collects DASD and tape I/O activity.

SEEKS: records the seek activity of specific DASD units.

The PERFORM, USER, and DASTAP classes cause very little performance overhead. Collect the data generated by these classes weekly. Pick a one- to two-hour period when the activity on your system is at its highest. The sampling intervals can be as frequent as you wish. The smaller the interval, the more frequent is the sampling and the greater is the accuracy of the sample. The default is 60 seconds.

The SEEKS class causes extensive overhead. Use this class only for short durations (less than five minutes) and only on devices where problems are already known.

To set up or change monitor classes use the SYSMON macro in DMKSYS, or the CP MONITOR command. For details on how to use the SYSMON macro, see the appropriate VM Planning and Reference manual. For details on how to use the CP MONITOR command, see the appropriate VM CP for System Programming manual.

To analyze the data collected by VM/Monitor you can use Virtual Machine Monitor Analysis Program (VMMAP) or the VM Performance Planning Facility (VMPPF). VMMAP identifies performance problems, monitors system utilization, and tracks the effect of system tuning. VMPPF creates a model of your system in which you can make workload or configuration changes. This permits you to predict the effect the changes will have on your system.

VM Channel Command Sequence Requirements

The 3990 requires that a Read, Write, Search, Seek Head, or Diagnostic Write Home Address instruction be preceded by a Seek (or similar) command. This is because a Seek on the 3990 does not necessarily cause head movement on the disk. Thus, a channel program that depends on the head position remaining unchanged from a prior access could access a track other than the one desired.

Subsystem Performance Tuning

The objective of performance tuning is to minimize I/O activity and balance the I/O load.

To minimize 3380 I/O activity, use 4K-byte block sizes for the CMS minidisks, and use auxiliary directories to reduce directory search time and storage requirements.

Balance channel and device activity whenever possible. The I/O utilization rate of some DASD strings can be increased more than others. One component of the subsystem should not limit the capabilities of all the others. Spread the high-activity system areas, minidisks, and temporary disk space across all volumes.

Chapter 13. Installation and Storage Administration Under VSE

Minimum VSE Program Levels for 3990 Models 1 and 2 Support

VSE support of the 3990 Model 1 and 3990 Model 2 is provided in VSE/SP Version 2, Release 1.7 and Version 3, Release 1.2. Included in the refreshes are:

- EREP Version 3 Release 3.2
- Device Support Facility (ICKDSF) Release 9.0.

See *Using the IBM 3380 Direct Access Storage in a VSE Environment* for program levels required for specific 3380 models.

Supported Channel Commands and Data Formats

The command set of the 3990 supports the count, key, and data (CKD) data format and the CKD and extended count, key, and data (ECKD) command set used for 3380 disk storage operations. The command sets are described in *IBM 3990 Storage Control Reference.*

Distributing Your I/O Load

You can use VSE/Performance Tool (VSE/PT, 5736-PLQ) to monitor your current configuration.

See *Using the IBM 3380 Direct Access Storage in a VSE Environment* for suggestions on how to use VSE/PT in planning for new storage resource and performance tuning.

Defining I/O Addresses

In VSE, you do not define storage director control unit addresses. Instead, you define each 3380 device address by adding the I/O addresses to VSE.

You do this through the Interactive Interface dialogs *Add Hardware Devices* and *Configure Hardware Addresses*. These interactive dialogs build the appropriate ADD statements. See *Using the IBM 3380 Direct Access Storage in a VSE Environment* for instructions and examples.

You also need to give your service representative the storage director control unit addresses for each channel and the I/O addresses you defined for each device. The service representative assigns these addresses to the 3990 and the 3380 units.

If you plan to install more 3380 units in the future, we recommend that you assign addresses for your planned string lengths, rather than your actual string lengths.

You can define these units to VSE during the configuration definition process. Each time you IPL your VSE system, VSE marks the units that are not installed as "device down." By defining any planned units or strings, you eliminate the need to reconfigure your system when you install the additional units or strings.

Identifying Publication Requirements

As you begin to plan your subsystem configuration, you may want additional publications. At the back of this manual, a bibliography lists publications that are referenced in this manual or are related to using 3380 DASD with VSE systems and VSE systems running under VM. Contact your IBM Marketing Representative to order copies of IBM publications.

Storage Administration Under VSE

Preparing Volumes for Use by VSE

After the 3990 and the 3380 strings are installed, you must prepare the volumes for use by VSE. Use the Device Support Facilities INIT command to initialize and format the volume and to create a volume table of contents (VTOC).

The general format for the INIT command is:

```
INIT UNIT(cuu) NVFY NOMAP PURGE DVTOC(END) VOLID(xxxxxx)
```

You furnish the unit address *cuu* and the volume ID *xxxxxx* and issue the command for each volume. See *Device Support Facilities User's Guide and Reference* for additional information. The following messages appear on the console:

```
ICK00700I cuu BEING PROCESSED AS LOGICAL DEVICE = xxxx
    PHYSICAL DEVICE = xxxx

ICK003D REPLY U TO ALTER VOLUME cuu CONTENTS, ELSE T
ENTER INPUT/COMMAND:
```

Your reply to the ICK003D message should be:

```
u
```

to cause the program to continue.

Running VSE Under VM

For initializing VSE minidisks, the format of the INIT command is:

```
INIT UNIT(cuu) NVFY MIMIC(MINI(xx))  DVTOC(END) VOLID(xxxxxx)
```

See *Using the IBM 3380 Direct Access Storage in a VM Environment* for more complete information on initializing VM minidisks before you issue this command.

We recommend that you avoid initializing volumes during prime shift, because these tasks may tie up processor channels for extended periods of time.

When using ICKDSF to initialize volumes, you may need to issue a DVCUP command before invoking ICKDSF. If you run ICKDSF stand-alone, then merely IPLing VSE will cause the DASD to be online if it has been defined to VSE.

Considerations for Console Message Handlers

Programs that filter and/or route console messages should be reviewed to take into account SIMs and other new messages.

VSE Channel Command Sequence Requirements

The 3990 requires that a Read, Write, Search, Seek Head, or Diagnostic Write Home Address instruction be preceded by a Seek (or similar) command. This is because a Seek on the 3990 does not necessarily cause head movement on the disk. Thus, a channel program that depends on the head position remaining unchanged from a prior access could access a track other than the one desired.

VSE Performance

The performance of VSE systems depends on many factors: workload, processor speed, channel capacity, communication network speed, and the storage subsystem configuration. All of these factors affect response time.

The performance factor most obvious to users is the terminal response time. Lower response times increase user productivity. Monitoring and improving the subsystem performance can result in cost savings and improved user satisfaction.

To ensure your system provides optimum performance, set response time goals for your system and use VSE/Performance Tool to determine if you are meeting those goals. See *Using the IBM 3380 Direct Access Storage in a VSE Environment* for information on using VSE/Performance Tool.

Appendix A. Using the Operator Panel

The operator panel gives you the capability to:

- Switch power on or off
- Enable or disable the channel interfaces to each storage director
- Enable or disable the storage cluster's remote support interface
- Monitor the 3990 operating status through the operator panel indicators.

Figure 82 on page 183 shows the operator panel for a 3990 Model 3 in DLSE mode with the Four Channel Switch, Additional feature, and the Remote/Local Capability feature.

Figure 83 on page 184 shows the operator panel for a 3990 Model 3 in DLS mode with the same features.

Figure 84 on page 185 shows the operator panel for a 3990 Model 1 in DLS mode with the same features.

Procedures for Switching Power On and Off

The position of the POWER SELECT switch determines whether you can switch 3990 power on and off from a host system or from the operator panel. The POWER SELECT switch is located on a power control panel that is accessible only to a service representative.

To switch power on and off from the processor: ensure the service representative has set the switch to REMOTE. Before you switch 3990 power off, ensure you have varied the 3990 offline to all attached hosts.

To switch power on from the 3990 operator panel: ensure the service representative has set the switch to LOCAL. Press the Power On side of the Subsystem Power switch.

To switch power off from the 3990 operator panel: press the Power Off side of the Subsystem Power switch. Except for emergencies, before you switch 3990 power off, ensure you have varied the 3990 offline to all attached hosts.

Warning: Use the Unit Emergency switch **only** in an emergency to prevent injury to individuals or to the 3990 and attached DASD.

Emergency Power Off (Unit Emergency Switch)

Set the Unit Emergency switch to Power Off to remove power immediately from the 3990. Use this switch **only** in an emergency to prevent injury to individuals or damage to the 3990 and attached DASD.

Warning: In the Power Off position, the Unit Emergency switch removes utility power from the 3990 Model 3. If you need to leave the Unit Emergency switch in the Power Off position for more than 48 hours on a 3990 Model 3, ask your service representative to disconnect the NVS battery to prevent battery damage from excessive discharge.

If the NVS battery has been disconnected during a utility power outage, ask your service representative to connect the NVS battery when you restore utility power.

If the DEVICE POWER SEQUENCE switch on the power sequence control board is set to ENABLE and power is off at all other storage controls attached to the DASD, power is also removed from the attached DASD.

In a dual-frame configuration, setting the Unit Emergency switch to Power Off in either storage control immediately switches power off at both storage controls.

To switch power on in a dual-frame configuration, the Unit Emergency switches in both storage controls must be set to Power Enable.

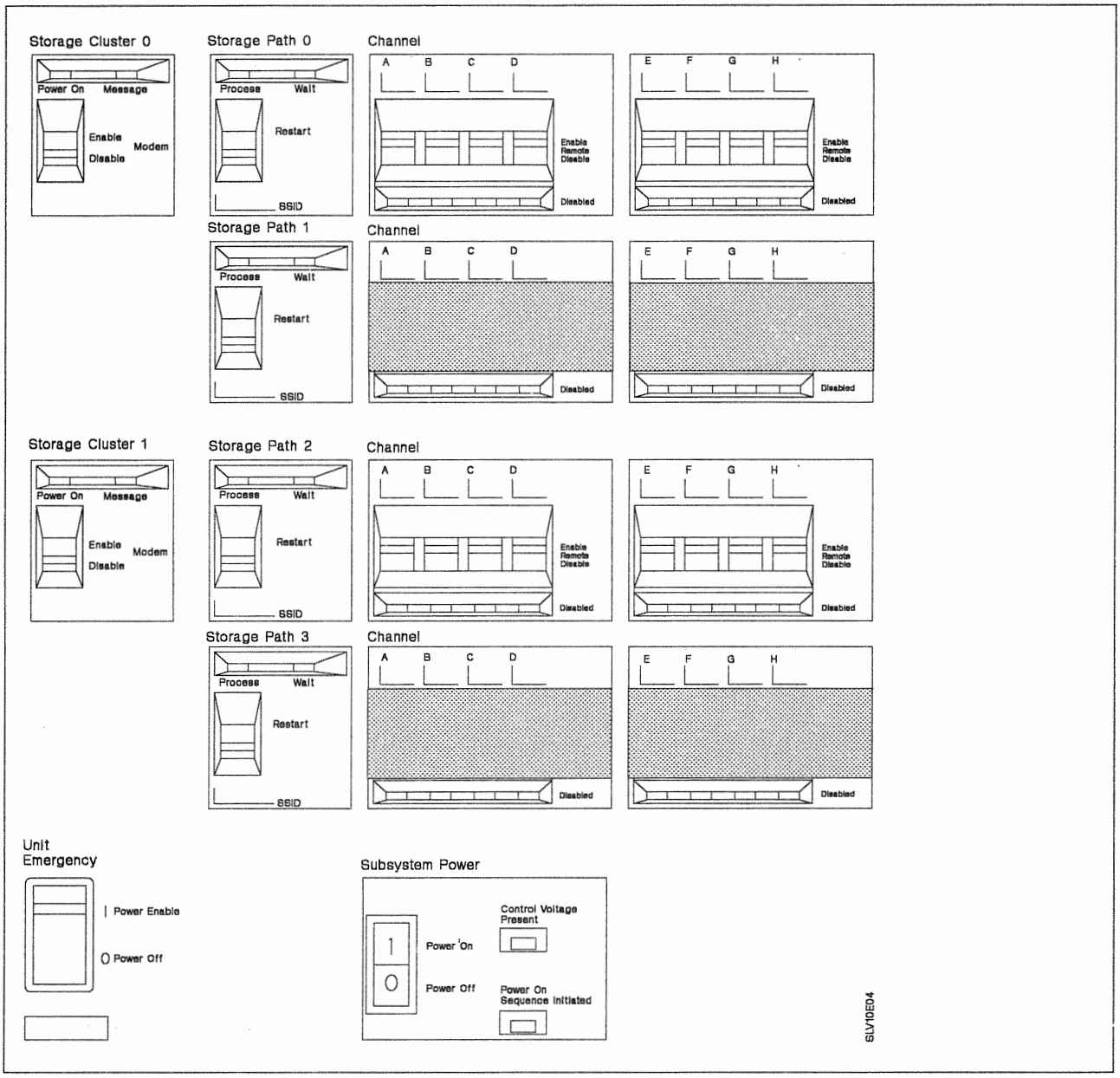

Figure 82. IBM 3990 Model 2 and 3 Operator Panel in DLSE Mode

Note: Channel lights and switches for channels E, F, G, and H are used only on 3990s with the Four Channel Switch, Additional feature.

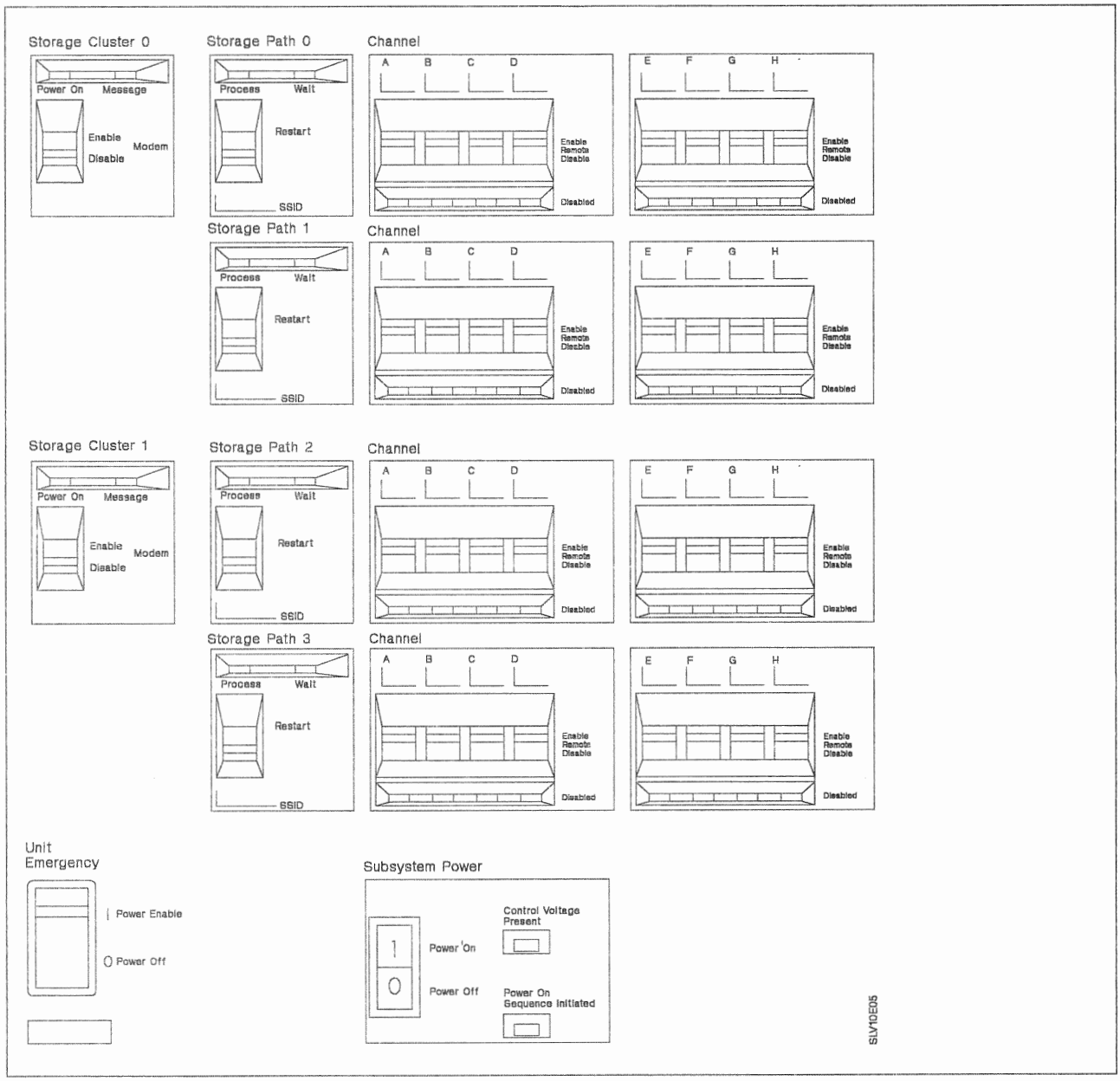

Figure 83. IBM 3990 Model 2 and 3 Operator Panel in DLS Mode

Note: Channel lights and switches for channels E, F, G, and H are used only on 3990s with the Four Channel Switch, Additional feature.

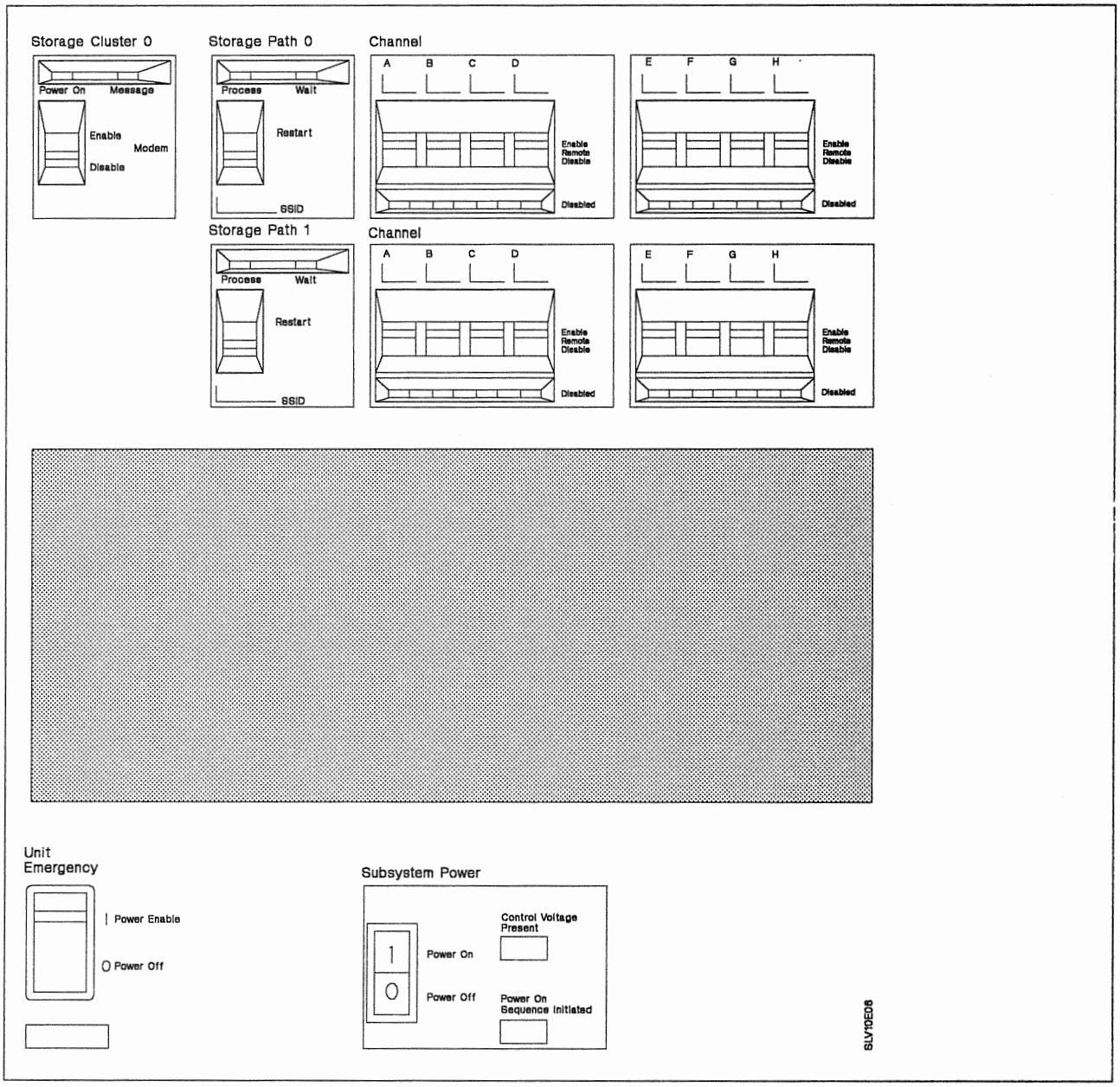

Figure 84. IBM 3990 Model 1 Operator Panel in DLS Mode

Note: Channel lights and switches for channels E, F, G, and H are used only on 3990s with the Four Channel Switch, Additional feature.

Subsystem Power Indicators

Three indicators provide status of the 3990 power system.

Control Voltage Present: When on, indicates that the +24 volt dc control voltage is present in the 3990.

Power On Sequence Initiated: When on, indicates that the 3990 power on sequence has started, either locally from the Operator's Panel or remotely from the processor.

When off, indicates that 3990 power was switched off.

Cache Power Sequence Complete (3990 Model 3 only): When on, indicates that all cache power supplies have sequenced on successfully.

When off, indicates that one or more cache power supplies are not sequenced on.

Switching 3990 Power On from a Processor

Make sure the Unit Emergency switch on the 3990 is in the Power Enable position. Switch processor power on. The processor's power on sequence generates the signal to switch the 3990 power on. The 3990 starts the power-on sequence if it is not already powered on. The Power On Sequence Initiated indicator is activated when the 3990 starts the power-on sequence.

If the Device Power Switch on the power sequence control board is set to Enable and all other attached storage controls are powered off, the attached DASD's power is also switched on.

Switching 3990 Power On from the Operator's Panel

Ensure the Unit Emergency switch on the 3990 is set to Power Enable. Press the Power On side of the Subsystem Power switch. The Power On Sequence Initiated indicator will be activated when the power-on sequence starts.

Warning: If the DEVICE POWER SEQUENCE switch on the power sequence control board is set to ENABLE and power is off at all other storage controls attached to the DASD, the attached DASD power is also switched on.

Switching Power Off from a Processor

Press the processor power off switch. The processor generates a power off signal to switch 3990 power off. If all other attached processors are powered off, the 3990 powers off.

Warning: If the Device Power Switch on the power sequence control board is set to Enable and all other attached storage controls are off, DASD power is also switched off.

Switching Power Off from the Operator's Panel

Press the Subsystem Power Off switch to switch 3990 power off.

Warning: If the Device Power Switch on the power sequence control board is set to Enable and all other attached storage controls are off, DASD power is also switched off.

Storage Cluster 0 and 1

The storage cluster switches and indicators are:

- Power On indicator
- Message indicator
- Modem Enable/Disable switches.

Power On: When on, indicates that the correct voltages are being supplied to the storage cluster.

Message: When on, indicates that an error occurred in the storage cluster and that a service information message (SIM) has been logged on the diskette. Errors that activate the Message indicator include cluster power check, support facility error, and storage path error. The Message indicator is reset when a service representative activates the MAPs on the cluster where the Message indicator is active.

Enabling Remote Support Session

Set the desired Storage Cluster Modem switch to Enable to permit the 3990 to generate a remote support password and to allow a remote support session to be established.

Disabling Remote Support Session

Set the desired Storage Cluster Modem switch to Disable to prevent or terminate a remote support session. When a Storage Cluster Modem switch is set to Disable, that cluster's support facility will not generate a remote support password.

Storage Paths/Channels

There can be up to four storage paths on the 3990. Each storage path can attach to up to eight channels. The status indicators for each storage path and channel are:

Process: When on, indicates that the storage path is processing functional requests.

Wait: When on, indicates that the storage path is waiting for a functional request.

Disabled: When on, the channel interface is disabled to that storage path. When off, the channel interface is enabled to that storage path.

Using Remote or Local Channel Switch Control

The Remote/Local Switch features permit you to enable and disable channel interfaces at the 3990 (local switch control) or from a remote switch panel (remote switch control).

Set the Channel switches to Remote in remote switch control mode. Set the channel switches to Enable or Disable in local switch control mode.

Enabling Channels to Storage Paths

For the appropriate storage path, set the Channel switch to Enable for the selected channel interface. The Disabled indicator will go off when the channel is enabled.

If the 3990 has the Remote/Local Switch features installed, your installation operating procedures will specify whether you control the Channel switches at the 3990 or at a remote switch panel.

Note: If the Remote/Local Switch feature is not installed, the remote position is disabled.

Disabling Channels to Storage Paths

For the appropriate storage path, set the Channel switch to Disable for the selected channel interface. The Disabled indicator is activated when all activity stops on the selected channel.

If the 3990 has the Remote/Local Switch features installed, your installation operating procedures will specify whether you control the Channel switches at the 3990 or at a remote switch panel.

The channel switches should not be set to disable until all paths through this channel have been varied off or quiesced. Setting a channel switch to disable resets all device reserves for the channel.

Restarting a Storage Path

Warning: Do not set the Storage Path Restart switch to Restart unless you are directed to do so by error recovery procedures. Use of this switch is described in "Storage Path Restart" on page 75. Follow your installations operational procedures on the use of this switch.

Appendix B. 3990 Configuration Planning Worksheets

This appendix contains configuration worksheets to help you plan your subsystem installation. Ensure you are familiar with the information in Chapter 7, "Planning the Physical Configuration" on page 87.

The worksheets are provided so you can diagram the vital product data and host system attachment information for the 3990 subsystem *before* you fill in the Vital Product Data Worksheets. We recommend that you make copies of the worksheets before you fill them in. Give the filled-in worksheets to your service representative for 3990 installation.

For dual-frame configurations, you will need two sets of the worksheets, one for each cluster pair. A cluster pair is frame 0, cluster 0 and frame 1, cluster 1. The other pair is frame 1, cluster 0 and frame 0, cluster 1.

Introducing the 3990 Configuration Planning Worksheets

The "3990 Channel Worksheets" on page 192 provide a place to record processor and channel attachment, and storage director control unit address information. One worksheet is required for each storage cluster. The 3990 Model 1 has one storage cluster; 3990 Model 2 and 3 have two storage clusters. Fill in the information for the channel interfaces that you will attach to the 3990.

The "3990 Subsystem Configuration Worksheets" on page 196 provide a place to diagram your subsystem configuration before you fill in the Vital Product Data Worksheets. Choose the worksheet for your configuration and operating mode and fill in all the information needed.

How to Select the Worksheets for the Subsystem You Are Installing

1. Identify the subsystem you are installing from the **3990 Model** and **Subsystem Configuration and Mode** columns in Figure 85.
2. In the **Subsystem Configuration and Mode** column, when 2-path strings are intermixed with a 4-path string, the 4-path string can be the first or the second string on the control interface. The order of listing the strings in the table identifies their relative position on the control interface.
3. The worksheet pages you need are identified in the two columns to the right of your subsystem configuration and mode. These two columns show the pages where you can find the channel and subsystem configuration worksheets for your subsystem.
4. Copy the specified worksheet pages and fill in the configuration information before you fill in the Vital Product Data Worksheets.

3990 Model	3990 Subsystem Configuration and Mode	Channel Configuration Worksheet, Page Number(s)	Subsystem Configuration Worksheet, Page Number(s)
3990 Model 1	DLS	192	196
3990 Model 2 or 3	DLSE	194 and 195	197
3990 Model 2 or 3	DLS	192 and 193	198
3990 Model 2 or 3	DLSE with intermixed 2-path and 4-path DASD strings 4-path and 2-path DASD strings	 194 and 195 194 and 195	 199 200
3990 Model 2 or 3	Dual-Frame DLSE	194 and 195	201
3990 Model 2 or 3	Dual-Frame DLS	192 and 193	202
3990 Model 2 or 3	Dual-Frame DLSE with intermixed 2-path and 4-path DASD strings 4-path and 2-path DASD strings	 194 and 195 194 and 195	 203 204
3990 Model 2 or 3	Dual-Frame DLS and DLSE	192 thru 195	205
3990 Model 2 or 3	Dual-Frame DLSE and DLS	192 thru 195	206

Figure 85 (Part 1 of 2). Cross-Reference List to the 3990 Configuration Planning Worksheets

3990 Model	3990 Subsystem Configuration and Mode	Channel Configuration Worksheet, Page Number(s)	Subsystem Configuration Worksheet, Page Number(s)
3990 Model 2 or 3	Dual-Frame DLS and DLSE with intermixed 2-path and 4-path DASD strings 4-path and 2-path DASD strings	 192 thru 195 192 thru 195	 207 208
3990 Model 2 or 3	Dual-Frame DLSE with intermixed 2-path and 4-path DASD strings and DLS 4-path and 2-path DASD strings and DLS	 192 thru 195 192 thru 195	 209 210
3990 Model 2 or 3	Dual-Frame DLSE with intermixed 2-path and 4-path DASD strings and DLSE 4-path and 2-path DASD strings and DLSE	 194 and 195 194 and 195	 211 212
3990 Model 2 or 3	Dual-Frame DLSE and DLSE with intermixed 2-path and 4-path DASD strings 4-path and 2-path DASD strings	 194 and 195 194 and 195	 213 214

Figure 85 (Part 2 of 2). Cross-Reference List to the 3990 Configuration Planning Worksheets

3990 Channel Worksheet—Storage Cluster 0 (DLS Mode) Frame _____

Installation Supplied Information (Channels A-D)

CPU ID _____ CHAN _____ SD 0 CUA _____ SD 1 CUA _____	CPU ID _____ CHAN _____ SD 0 CUA _____ SD 1 CUA _____	CPU ID _____ CHAN _____ SD 0 CUA _____ SD 1 CUA _____	CPU ID _____ CHAN _____ SD 0 CUA _____ SD 1 CUA _____
Channel A	Channel B	Channel C	Channel D

Installation Supplied Information (Channels E-H)

CPU ID _____ CHAN _____ SD 0 CUA _____ SD 1 CUA _____	CPU ID _____ CHAN _____ SD 0 CUA _____ SD 1 CUA _____	CPU ID _____ CHAN _____ SD 0 CUA _____ SD 1 CUA _____	CPU ID _____ CHAN _____ SD 0 CUA _____ SD 1 CUA _____
Channel E	Channel F	Channel G	Channel H

Legend

CHAN = Channel Number or ID
CUA = Control Unit Address
SD = Storage Director

Notes:

1. In DLS mode, if a channel (A-H) is set to access both storage directors in a cluster, each storage director must use a different address range.
2. In a 3990 Model 1, each channel can attach to one and only one storage director. You must enter X'FF' on the storage director control unit address for each channel that is not assigned to the storage director.

SLVK0CH1

3990 Channel Worksheet—Storage Cluster 1 (DLS Mode) Frame _____

Installation Supplied Information (Channels A-D)

CPU ID _____ CHAN _____ SD 2 CUA _____ SD 3 CUA _____	CPU ID _____ CHAN _____ SD 2 CUA _____ SD 3 CUA _____	CPU ID _____ CHAN _____ SD 2 CUA _____ SD 3 CUA _____	CPU ID _____ CHAN _____ SD 2 CUA _____ SD 3 CUA _____
Channel A	Channel B	Channel C	Channel D

Installation Supplied Information (Channels E-H)

CPU ID _____ CHAN _____ SD 2 CUA _____ SD 3 CUA _____	CPU ID _____ CHAN _____ SD 2 CUA _____ SD 3 CUA _____	CPU ID _____ CHAN _____ SD 2 CUA _____ SD 3 CUA _____	CPU ID _____ CHAN _____ SD 2 CUA _____ SD 3 CUA _____
Channel E	Channel F	Channel G	Channel H

Legend

CHAN = Channel Number or ID
CUA = Control Unit Address
SD = Storage Director

Note:

In DLS mode, if a channel (A–H) is set to access both storage directors in a cluster, each storage director must use a different address range.

SLVK0CH2

3990 Channel Worksheet—Storage Cluster 0 (DLSE Mode) Frame _____

Installation Supplied Information (Channels A-D)

CPU ID _____ CHAN _____ SD 0 CUA _____	CPU ID _____ CHAN _____ SD 0 CUA _____	CPU ID _____ CHAN _____ SD 0 CUA _____	CPU ID _____ CHAN _____ SD 0 CUA _____
Channel A	Channel B	Channel C	Channel D

Installation Supplied Information (Channels E-H)

CPU ID _____ CHAN _____ SD 0 CUA _____	CPU ID _____ CHAN _____ SD 0 CUA _____	CPU ID _____ CHAN _____ SD 0 CUA _____	CPU ID _____ CHAN _____ SD 0 CUA _____
Channel E	Channel F	Channel G	Channel H

Legend

CHAN = Channel Number or ID
CUA = Control Unit Address
SD = Storage Director

slvkOch3

3990 Channel Worksheet—Storage Cluster 1 (DLSE Mode) Frame _____

Installation Supplied Information (Channels A-D)

CPU ID _____ CHAN _____ SD 1 CUA _____	CPU ID _____ CHAN _____ SD 1 CUA _____	CPU ID _____ CHAN _____ SD 1 CUA _____	CPU ID _____ CHAN _____ SD 1 CUA _____
Channel A	Channel B	Channel C	Channel D

Installation Supplied Information (Channels E-H)

CPU ID _____ CHAN _____ SD 1 CUA _____	CPU ID _____ CHAN _____ SD 1 CUA _____	CPU ID _____ CHAN _____ SD 1 CUA _____	CPU ID _____ CHAN _____ SD 1 CUA _____
Channel E	Channel F	Channel G	Channel H

Legend

CHAN = Channel Number or ID
CUA = Control Unit Address
SD = Storage Director

slvk0ch4

3990 Subsystem Configuration Worksheets

Note: See "Subsystem Identifiers (SSIDs)" on page 90 for information on SSID labels.

3990 Model 1 Subsystem Configuration Worksheet (DLS Mode)

SSID for the Subsystem Attached to SD 0, 1: _____

Number of Addressable Devices for the Subsystem Attached to SD 0, 1 (8, 16, or 32): _____

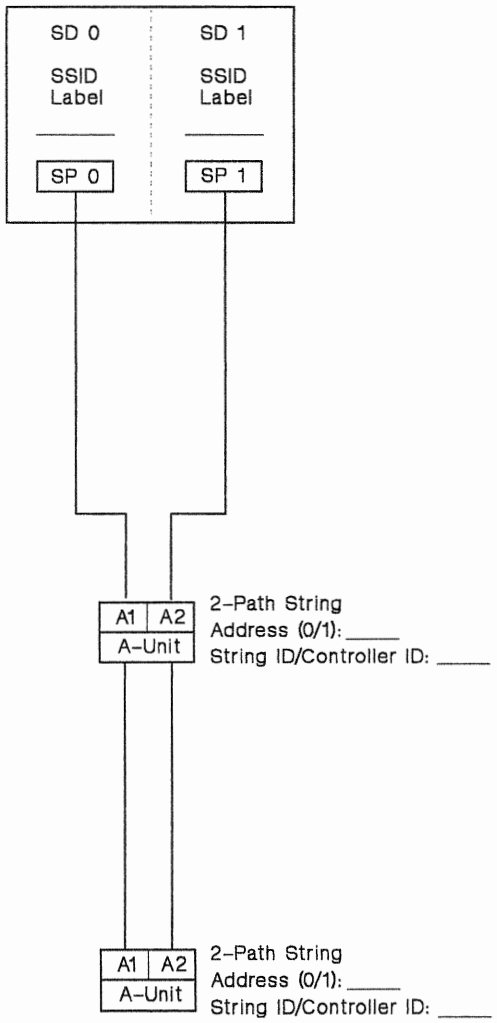

Legend

SD = Storage Dirtector
SP = Storage Path
SSID = Subsystem Identifier

NOTE:

The second DASD string is optional.

SLVK0C01

3990 Model 2 or 3 Subsystem Configuration Worksheet (DLSE Mode)

SSID for the Subsystem Attached to SD 0, 1: _____

Number of Addressable Devices for the Subsystem Attached to SD 0, 1 (32 or 64): _____

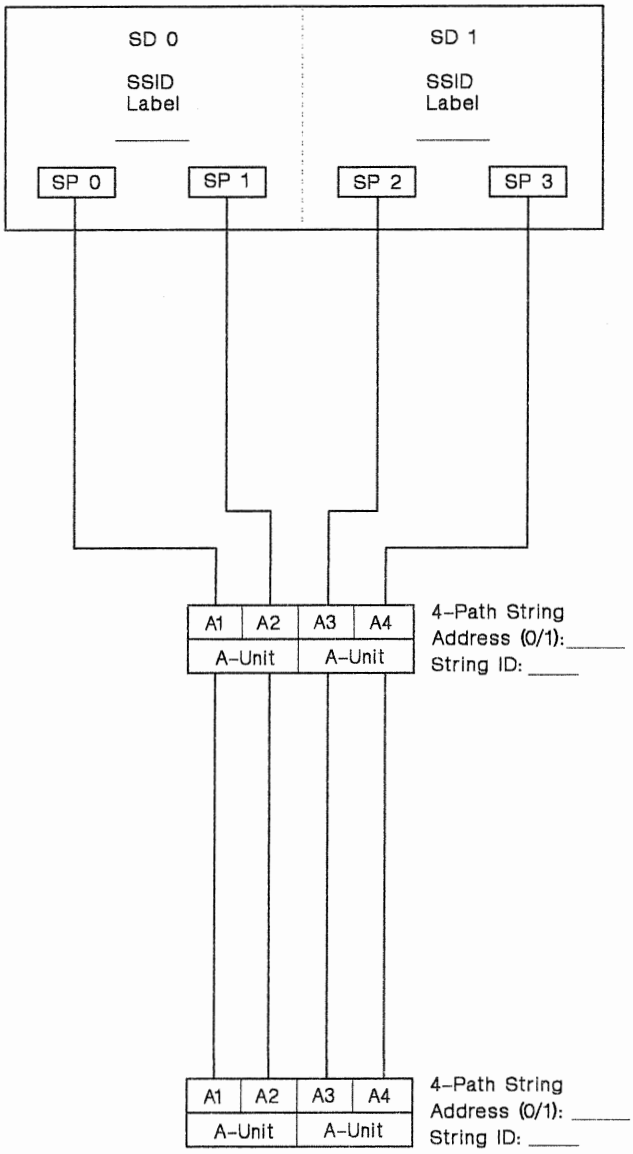

Legend

SD = Storage Director
SP = Storage Path
SSID = Subsystem Identifier

NOTE:

The second DASD string is optional.

SLVK0C02

3990 Model 2 or 3 Subsystem Configuration Worksheet (DLS Mode)

SSID for the Subsystem Attached to SD 0, 2: _____
SSID for the Subsystem Attached to SD 1, 3: _____
Number of Addressable Devices for the Subsystem Attached to SD 0, 2 (8, 16, or 32): _____
Number of Addressable Devices for the Subsystem Attached to SD 1, 3 (8, 16, or 32): _____

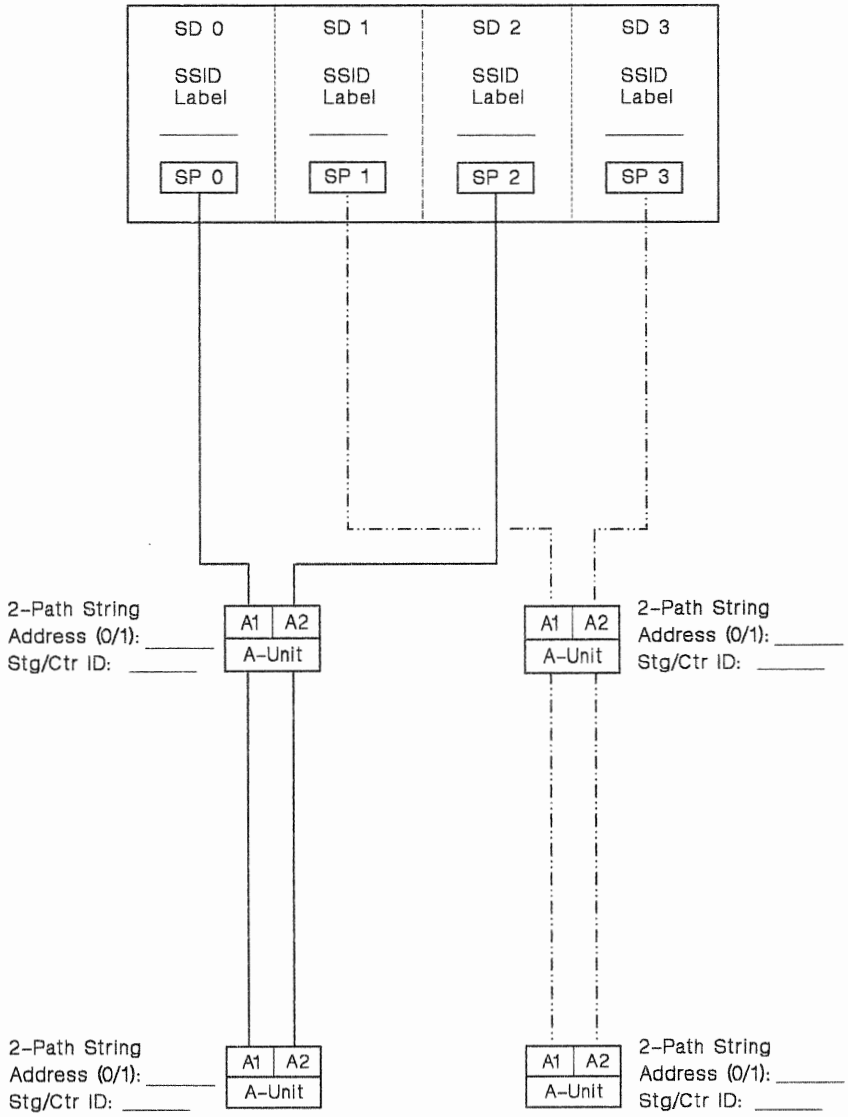

Legend

SD = Storage Director
SP = Storage Path
SSID = Subsystem Identifier
Stg/Ctr ID = String ID/Controller ID

NOTE:

The second DASD string in each subsystem is optional.

SLVK0C03

3990 Model 2 or 3 Subsystem Configuration Worksheet (DLSE Mode With Intermixed 2-Path and 4-Path DASD Strings)

SSID for the Subsystem Attached to SD 0, 1: _____

Number of Addressable Devices for the Subsystem Attached to SD 0, 1 is: 64

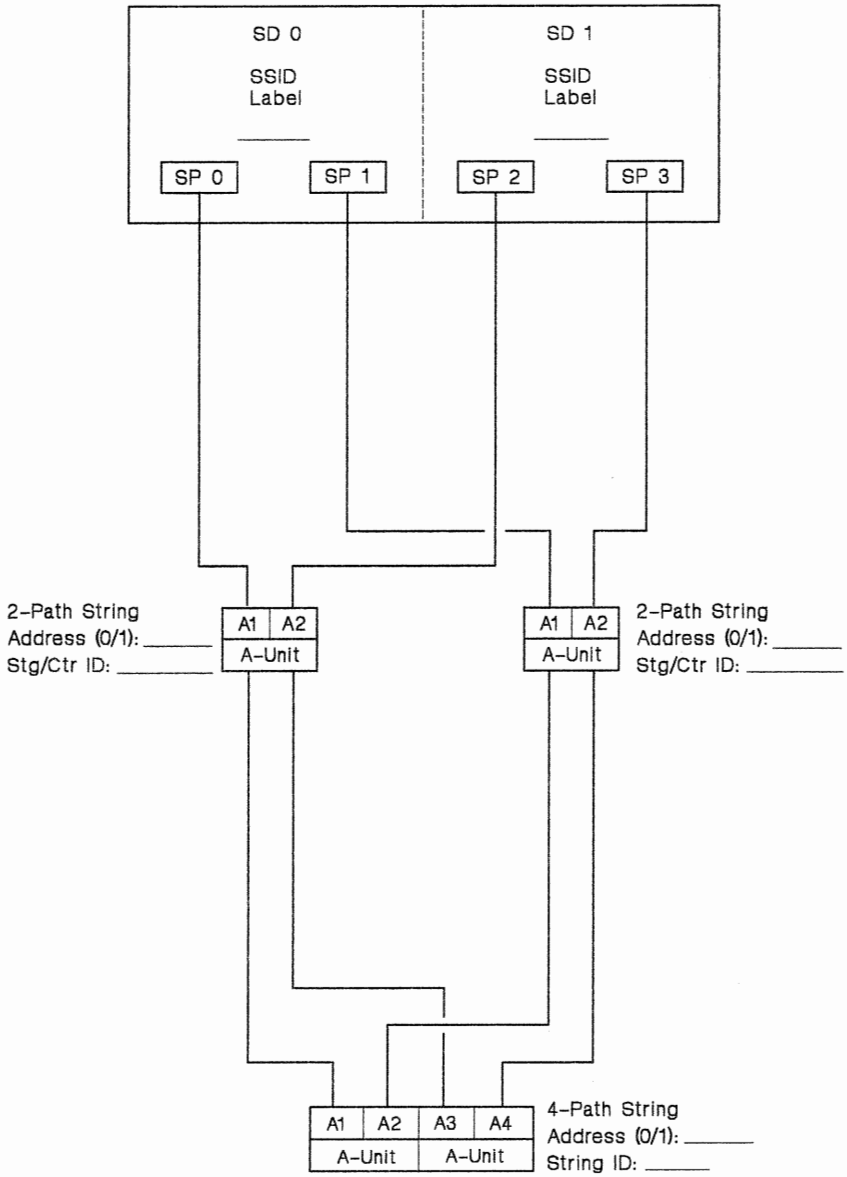

Legend

SD = Storage Director
SP = Storage Path
SSID = Subsystem Identifier
Stg/Ctr ID = String ID/Controller ID

NOTE:

One of the 2-path DASD strings is optional.

SLVK0C04

3990 Model 2 or 3 Subsystem Configuration Worksheet (DLSE Mode With Intermixed 4-Path and 2-Path DASD Strings)

SSID for the Subsystem Attached to SD 0, 1: _____

Number of Addressable Devices for the Subsystem Attached to SD 0, 1 is: 64

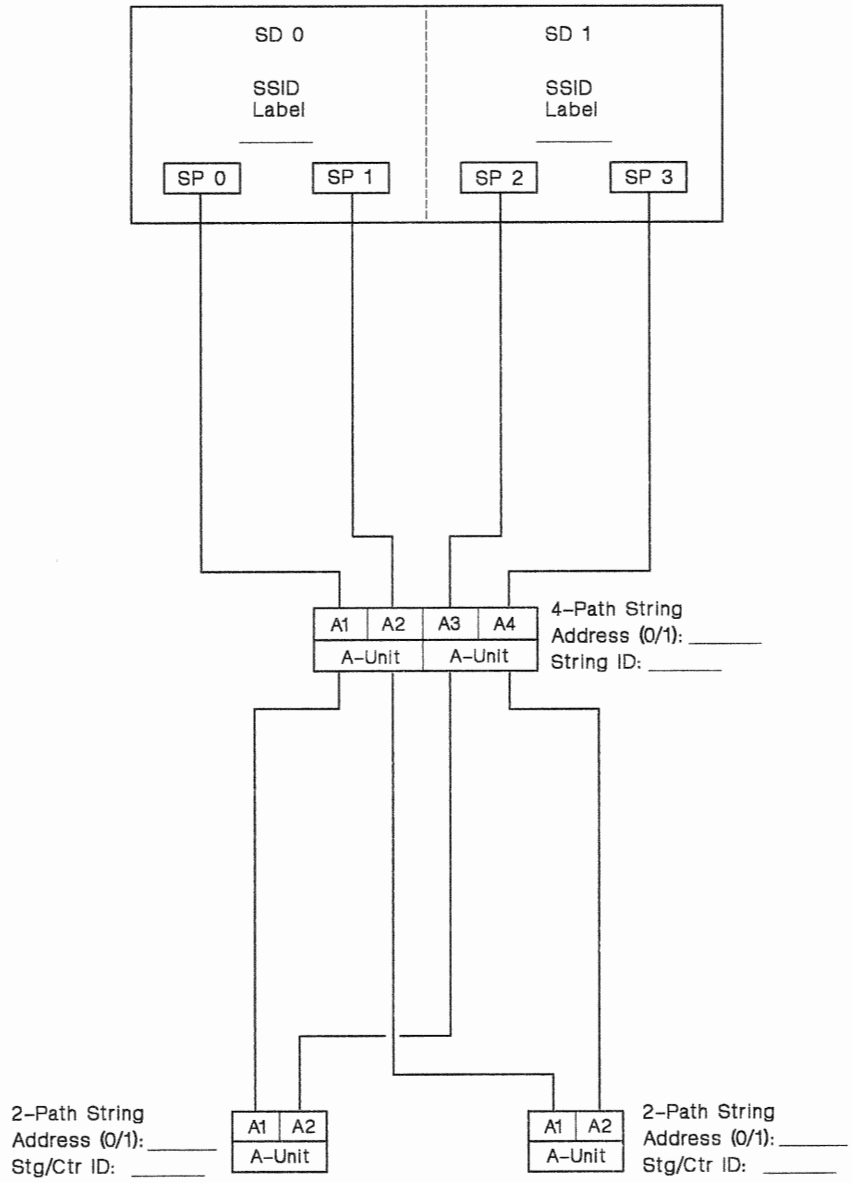

Legend

SD = Storage Director
SP = Storage Path
SSID = Subsystem Identifier
Stg/Ctr ID = String ID/Controller ID

NOTE:

One of the 2-path DASD strings is optional.

SLVK0C05

Dual-Frame 3990 Model 2 or 3 Subsystem Configuration Worksheet (DLSE Mode)

SSID for the Subsystem Attached to:
Frame 0, SD 0 and Frame 1, SD 1: _____
Frame 0, SD 1 and Frame 1, SD 0: _____

Number of Addressable Devices for the Subsystem Attached to:
Frame 0, SD 0 and Frame 1, SD 1 (32 or 64): _____
Frame 0, SD 1 and Frame 1, SD 0 (32 or 64): _____

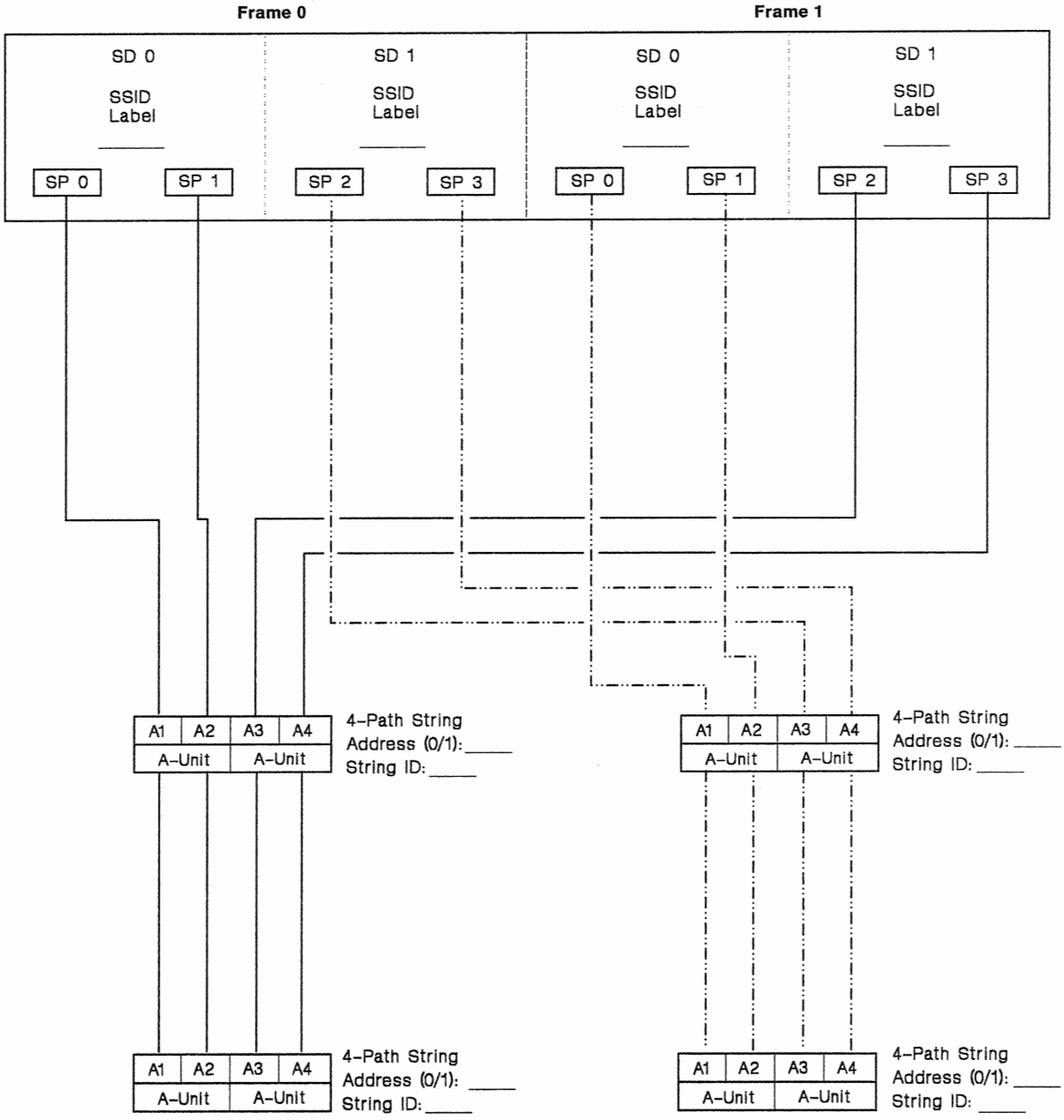

Legend

SD = Storage Director
SP = Storage Path
SSID = Subsystem Identifier

NOTE:

One DASD string in each logical DASD subsystem is optional.

SLVK0C06

Dual-Frame 3990 Model 2 or 3 Subsystem Configuration Worksheet (DLS Mode)

SSID for the Subsystem Attached to:

Frame 0, SD 0 and Frame 1, SD 2:_____

Frame 0, SD 1 and Frame 1, SD 3: _____

Frame 1, SD 0 and Frame 0, SD 2:_____

Frame 1, SD 1 and Frame 0, SD 3: _____

Number of Addressable Devices for the Subsystem Attached to:

Frame 0, SD 0 and Frame 1, SD 2 (8, 16, or 32):_____

Frame 0, SD 1 and Frame 1, SD 3 (8, 16, or 32):_____

Frame 1, SD 0 and Frame 0, SD 2 (8, 16, or 32):_____

Frame 1, SD 1 and Frame 0, SD 3 (8, 16, or 32):_____

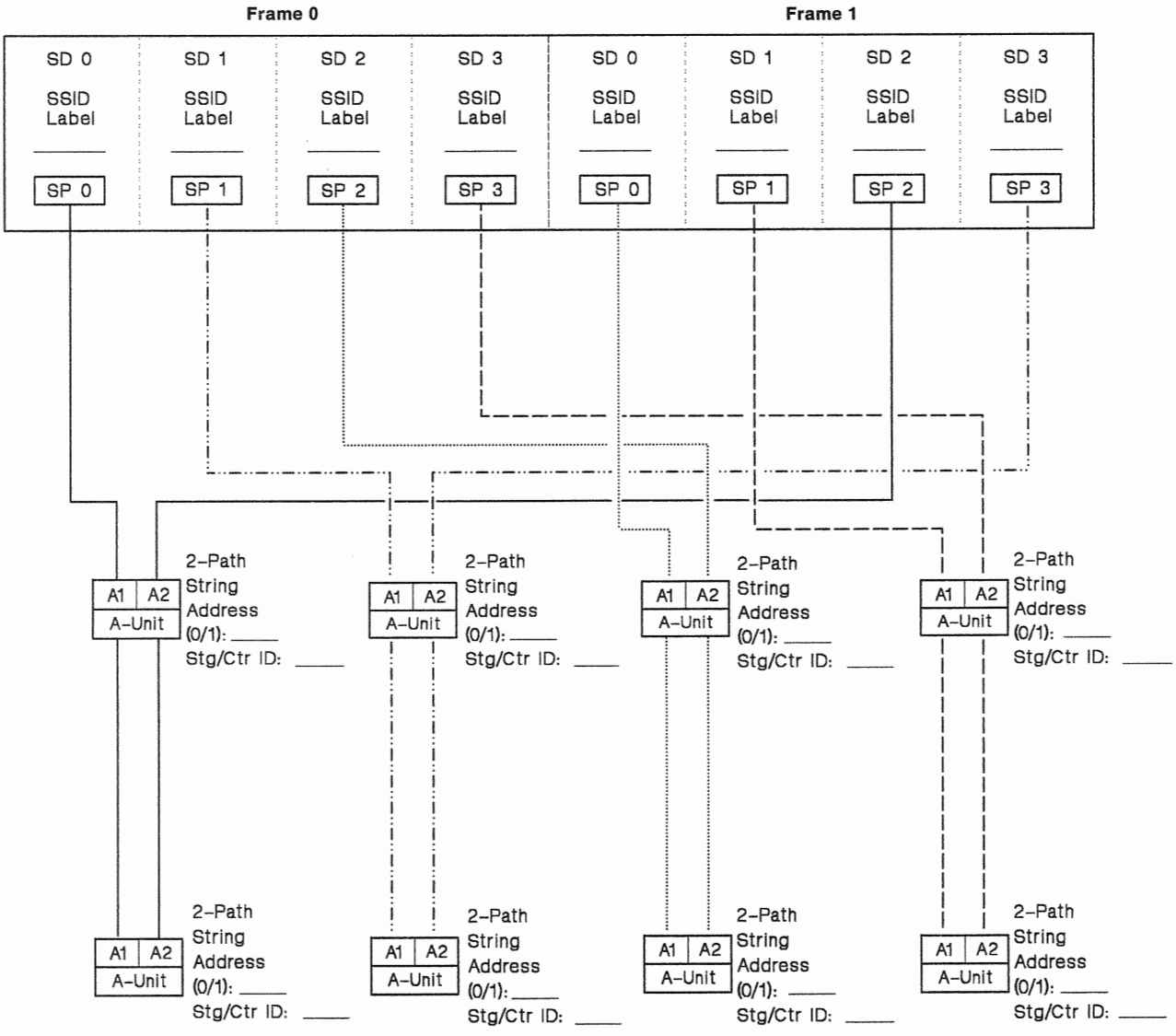

Legend

SD = Storage Director
SP = Storage Path
SSID = Subsystem Identifier
Stg/Ctr ID = String ID/Controller ID

NOTE:

One DASD string in each logical DASD subsystem is optional.

SLVK0C07

Dual-Frame 3990 Model 2 or 3 Subsystem Configuration Worksheet (DLSE Mode With Intermixed 2-Path and 4-Path DASD Strings)

SSID for the Subsystem Attached to:
Frame 0, SD 0 and Frame 1, SD 1: _____
Frame 0, SD 1 and Frame 1, SD 0: _____

Number of Addressable Devices for the Subsystem Attached to:
Frame 0, SD 0 and Frame 1, SD 1 is: 64
Frame 0, SD 1 and Frame 1, SD 0 is: 64

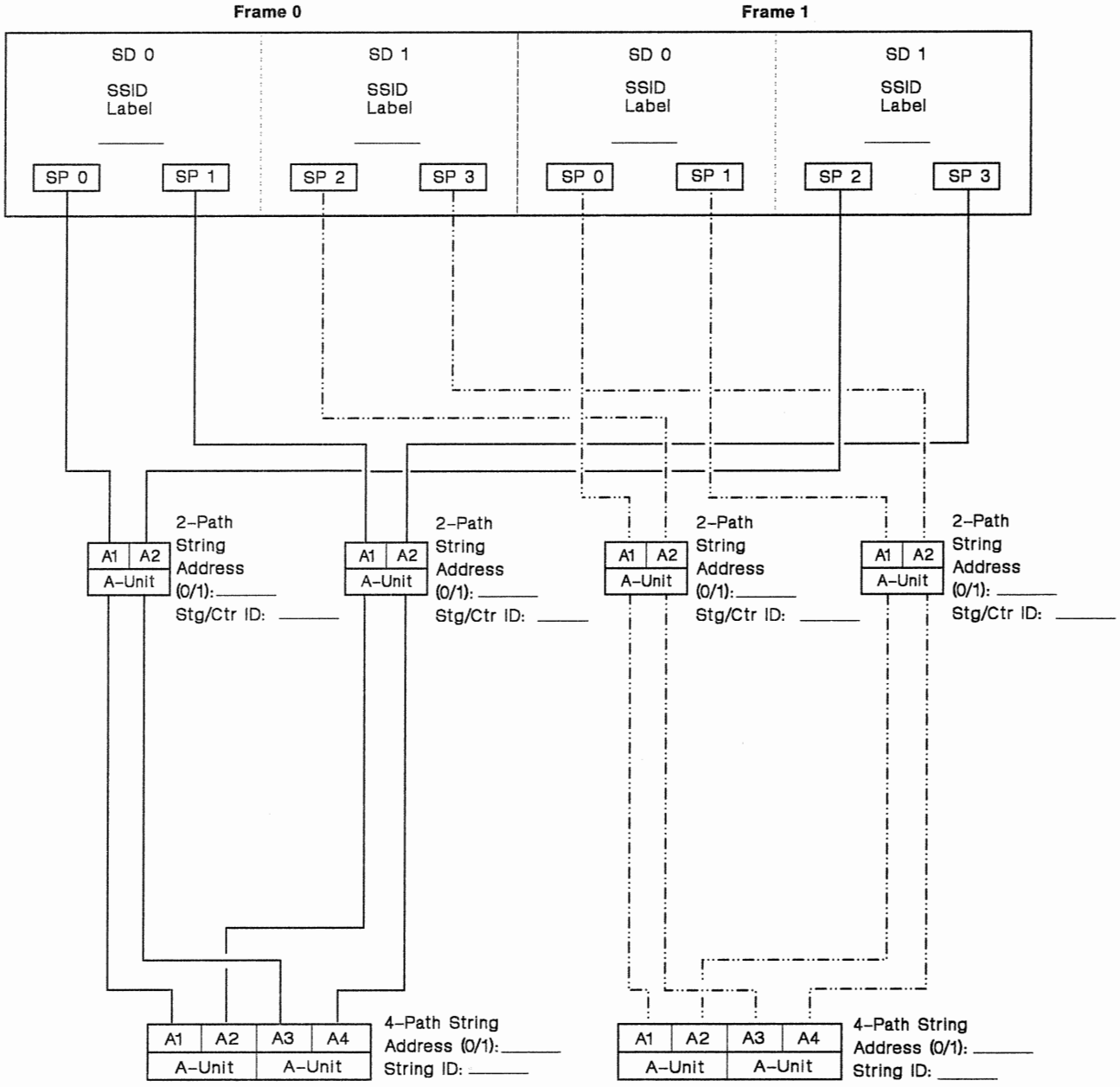

Legend

SD = Storage Director
SP = Storage Path
SSID = Subsystem Identifier
Str/Ctr ID = String ID/Controller ID

NOTE:

One 2-path DASD string in each logical DASD subsystem is optional.

SLVK0C08

Dual-Frame 3990 Model 2 or 3 Subsystem Configuration Worksheet (DLSE Mode With Intermixed 4-Path and 2-Path DASD Strings)

SSID for the Subsystem Attached to:
Frame 0, SD 0 and Frame 1, SD 1:_____
Frame 0, SD 1 and Frame 1, SD 0:_____

Number of Addressable Devices for the Subsystem Attached to:
Frame 0, SD 0 and Frame 1, SD 1 is: 64
Frame 0, SD 1 and Frame 1, SD 0 is: 64

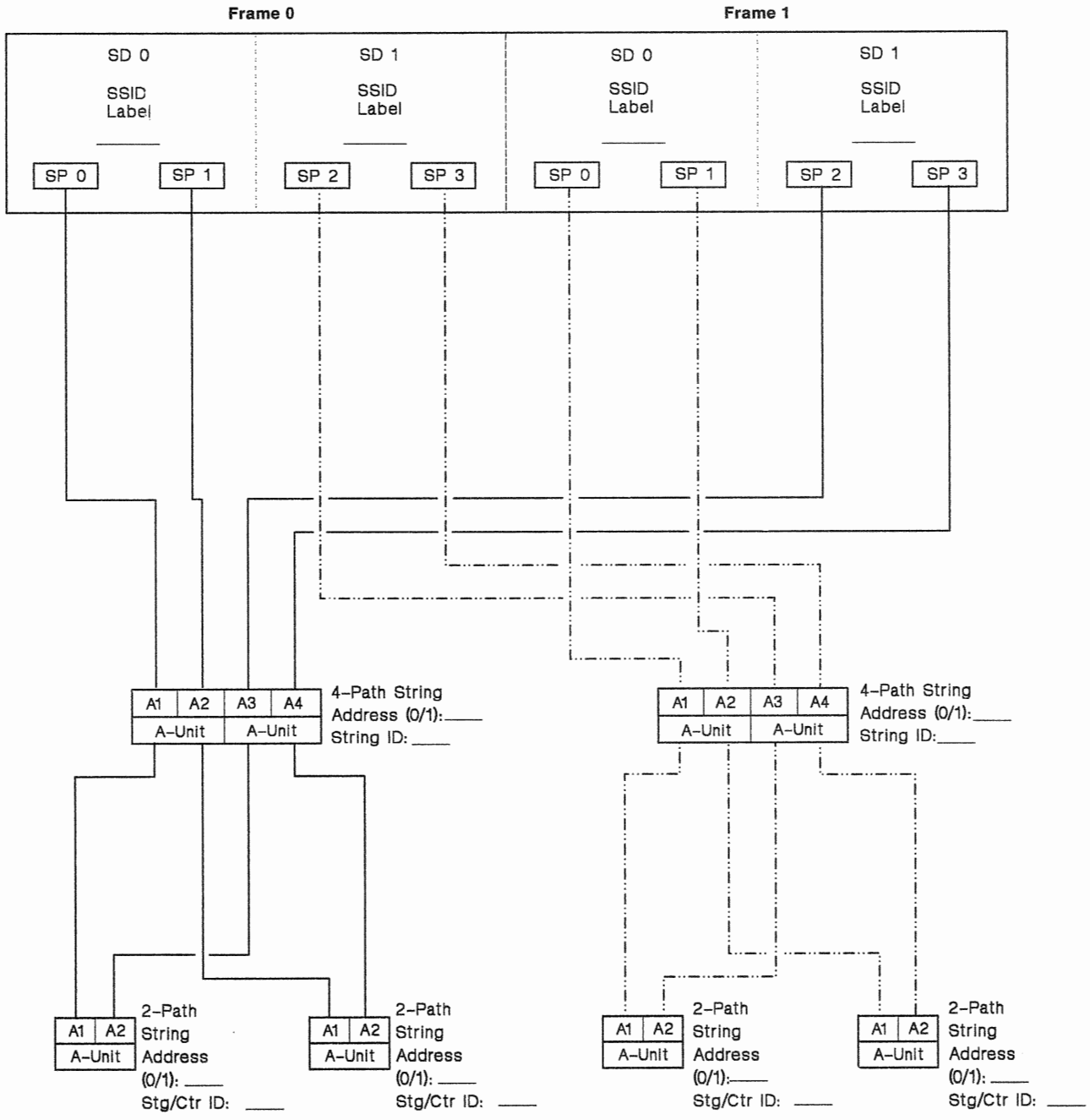

Legend

SD = Storage Director
SP = Storage Path
SSID = Subsystem Identifier
Stg/Ctr ID = String ID/Controller ID

NOTE:

One 2-path DASD string in each logical DASD subsystem is optional.

SLVK0C09

Dual-Frame 3990 Model 2 or 3 Subsystem Configuration Worksheet (DLS and DLSE Mode)

SSID for the Subsystem Attached to:
- Frame 0, SD 0 and Frame 1, SD 2: _____
- Frame 0, SD 1 and Frame 1, SD 3: _____
- Frame 1, SD 0 and Frame 0, SD 1: _____

Number of Addressable Devices for the Subsystem Attached to:
- Frame 0, SD 0 and Frame 1, SD 2 (8, 16, or 32): _____
- Frame 0, SD 1 and Frame 1, SD 3 (8, 16, or 32): _____
- Frame 1, SD 0 and Frame 0, SD 1 (32 or 64): _____

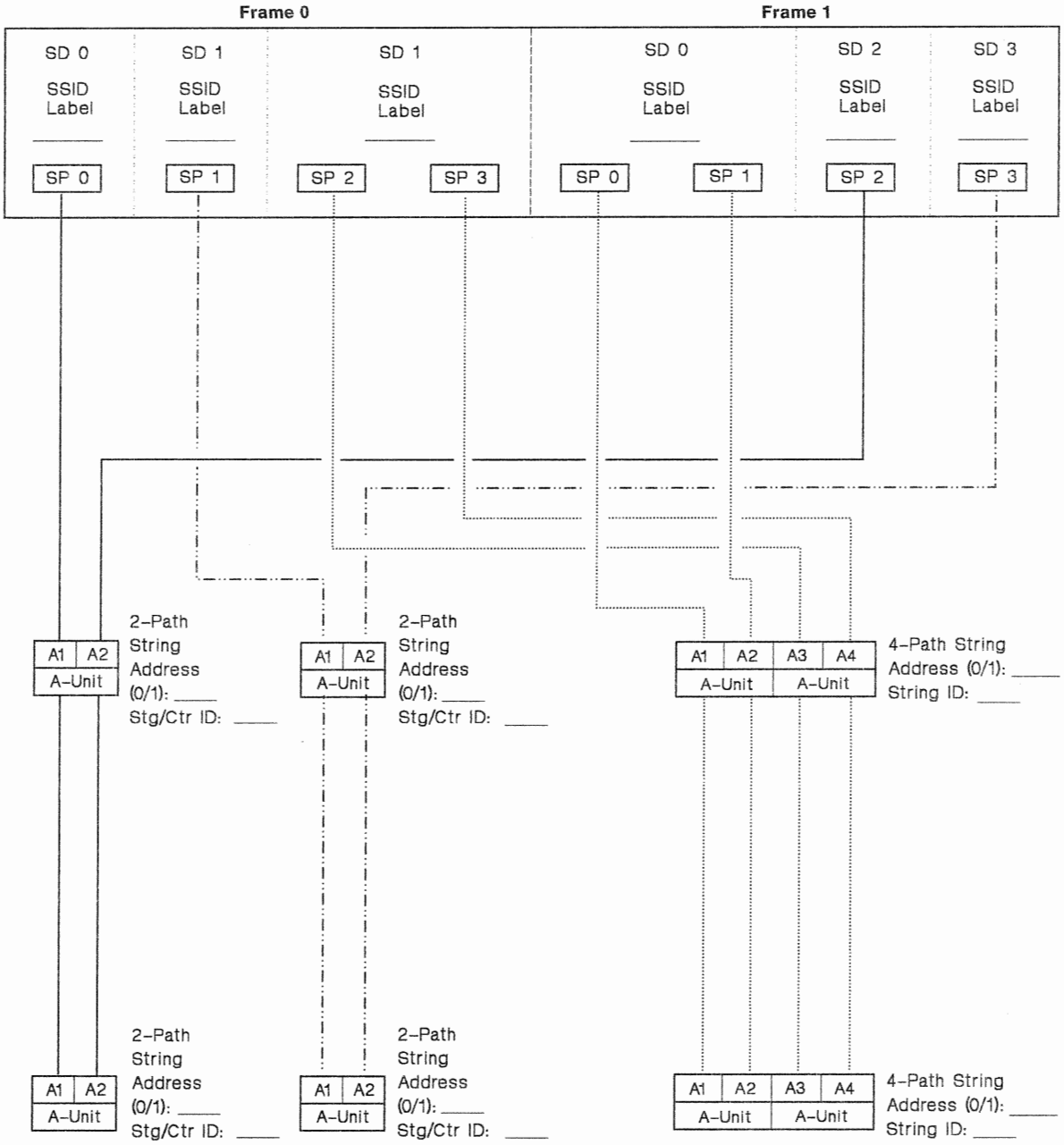

Legend

SD = Storage Director
SP = Storage Path
SSID = Subsystem Identifier
Str/Ctr ID = String ID/Controller ID

NOTES:

1. One 2-path DASD string in each DLS logical DASD subsystem is optional
2. One 4-path DASD string in each DLSE logical DASD subsystem is optional.

SLVK0C10

Dual-Frame 3990 Model 2 or 3 Subsystem Configuration Worksheet (DLSE and DLS Mode)

SSID for the Subsystem Attached to:

Frame 0, SD 0 and Frame 1, SD 1:_____

Frame 1, SD 0 and Frame 0, SD 2:_____

Frame 1, SD 1 and Frame 0, SD 3:_____

Number of Addressable Devices for the Subsystem Attached to:

Frame 0, SD 0 and Frame 1, SD 1 (32 or 64):_____

Frame 1, SD 0 and Frame 0, SD 2 (8, 16, or 32):_____

Frame 1, SD 1 and Frame 0, SD 3 (8, 16, or 32):_____

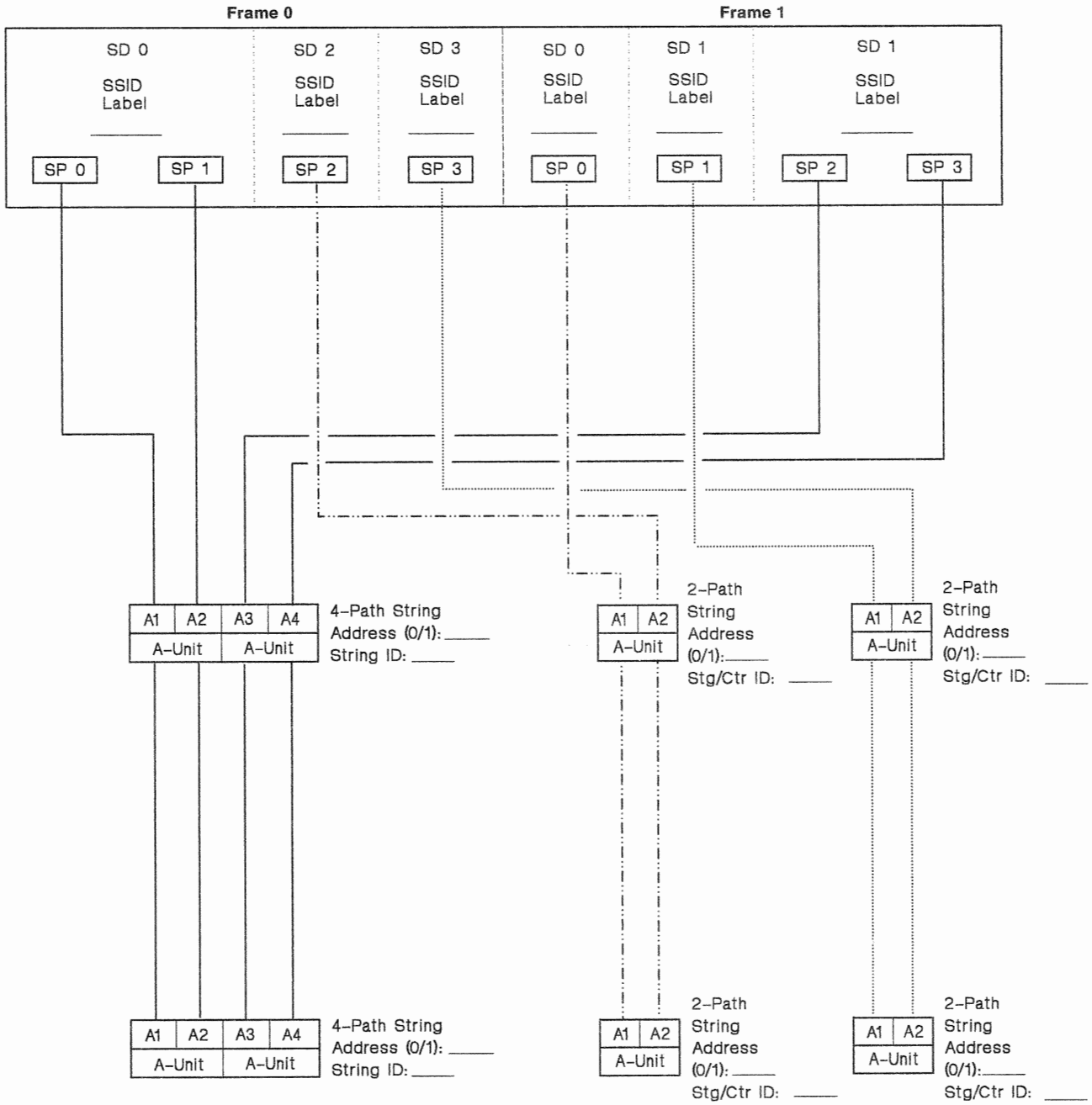

Legend

SD = Storage Director
SP = Storage Path
SSID = Subsystem Identifier
Str/Ctr ID = String ID/Controller ID

NOTES:

1. One 2-path DASD string in each DLS logical DASD subsystem is optional.
2. One 4-path DASD string in each DLSE logical DASD subsystem is optional.

SLVK0C11

Dual-Frame 3990 Model 2 or 3 Subsystem Configuration Worksheet (DLS and DLSE Mode With Intermixed 2-Path and 4-Path DASD Strings)

SSID for the Subsystem Attached to:
- Frame 0, SD 0 and Frame 1, SD 2: _____
- Frame 0, SD 1 and Frame 1, SD 3: _____
- Frame 1, SD 0 and Frame 0, SD 1: _____

Number of Addressable Devices for the Subsystem Attached to:
- Frame 0, SD 0 and Frame 1, SD 2 (8, 16, or 32): _____
- Frame 0, SD 1 and Frame 1, SD 3 (8, 16, or 32): _____
- Frame 1, SD 0 and Frame 0, SD 1 is: 64

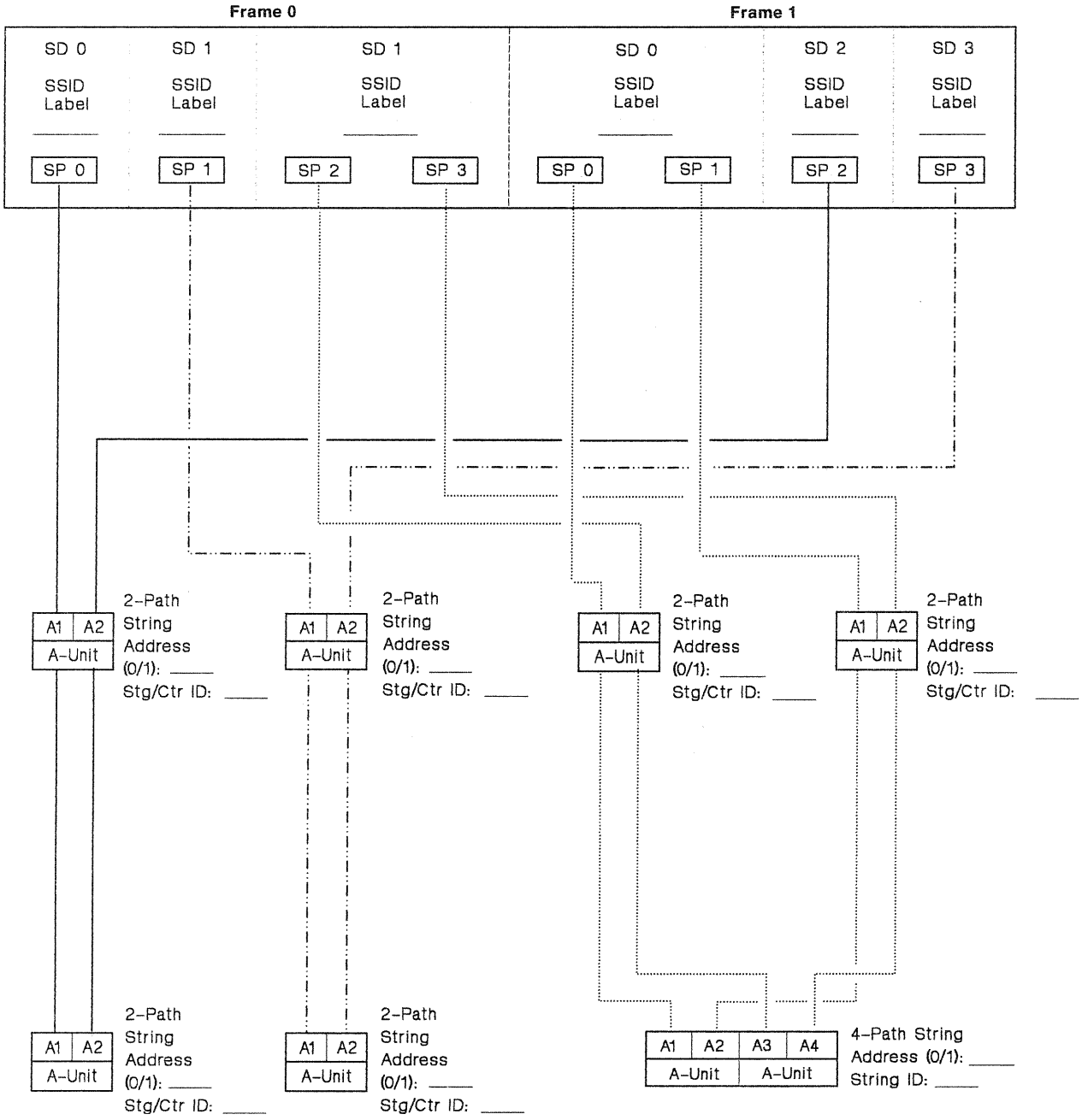

Legend

SD = Storage Director
SP = Storage Path
SSID = Subsystem Identifier
Stg/Ctr ID = String ID/Controller ID

NOTES:

1. One 2-path DASD string in each DLS logical DASD subsystem is optional.
2. One of the 2-path DASD strings in the DLSE logical subsystem is optional.

SLYK0C12

Dual-Frame 3990 Model 2 or 3 Subsystem Configuration (DLS and DLSE Mode With Intermixed 4-Path and 2-Path DASD Strings)

SSID for the Subsystem Attached to:
- Frame 0, SD 0 and Frame 1, SD 2: _____
- Frame 0, SD 1 and Frame 1, SD 3: _____
- Frame 1, SD 0 and Frame 0, SD 1: _____

Number of Addressable Devices for the Subsystem Attached to:
- Frame 0, SD 0 and Frame 1, SD 2 (8, 16, or 32): _____
- Frame 0, SD 1 and Frame 1, SD 3 (8, 16, or 32): _____
- Frame 1, SD 0 and Frame 0, SD 1 is: 64

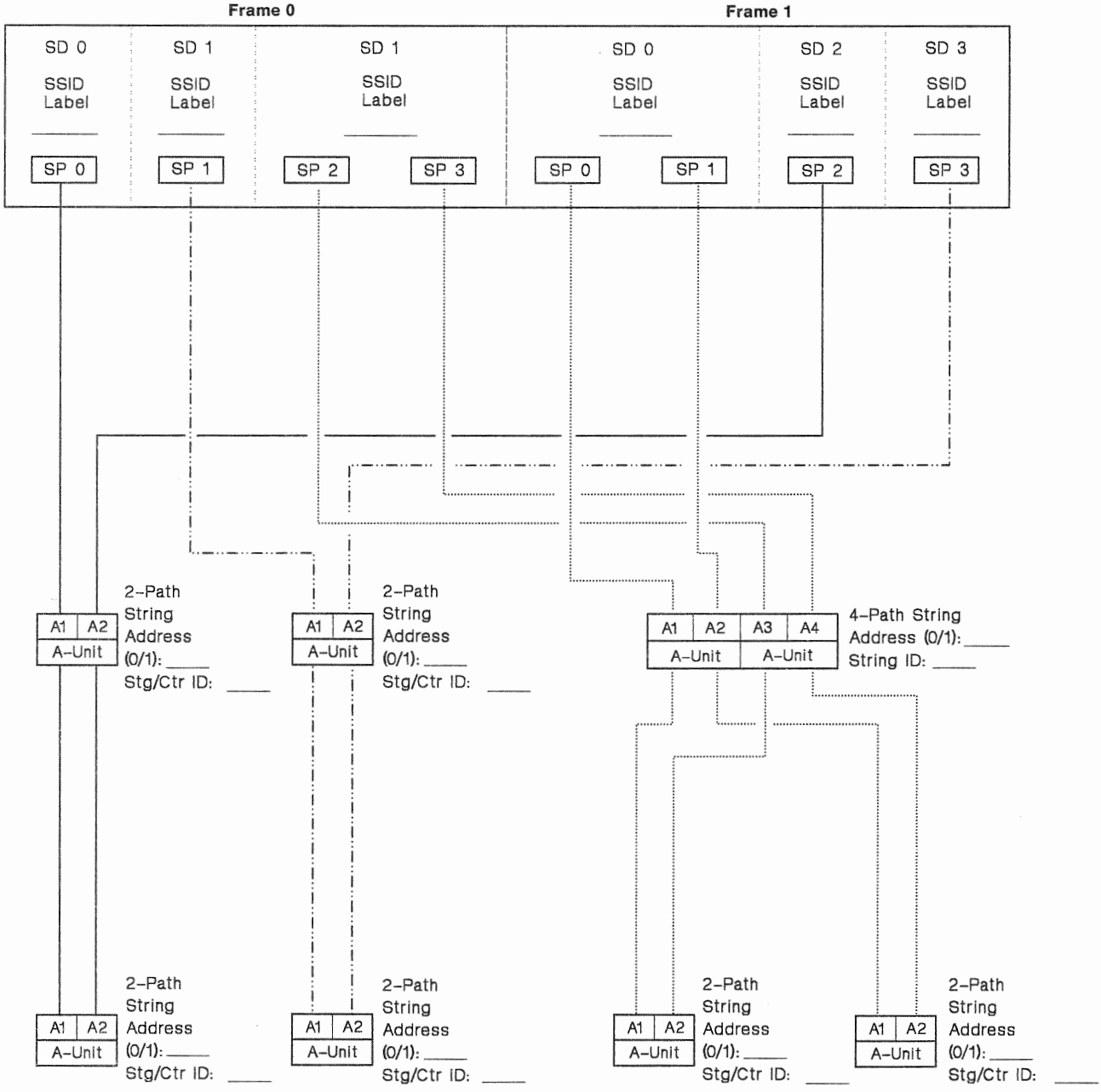

Legend

SD = Storage Director
SP = Storage Path
SSID = Subsystem Identifier
Stg/Ctr ID = String ID/Controller ID

NOTES:

1. One 2-path DASD string in each DLS logical DASD subsystem is optional.
2. One of the 2-path DASD strings in the DLSE logical DASD subsystem is optional.

SLVK0C13

Dual-Frame 3990 Model 2 or 3 Subsystem Configuration (DLSE Mode With Intermixed 2-Path and 4-Path DASD Strings and DLS Mode)

SSID for the Subsystem Attached to:
- Frame 0, SD 0 and Frame 1, SD 1: _____
- Frame 1, SD 0 and Frame 0, SD 2: _____
- Frame 1, SD 1 and Frame 0, SD 3: _____

Number of Addressable Devices for the Subsystem Attached to:
- Frame 0, SD 0 and Frame 1, SD 1 is: 64
- Frame 1, SD 0 and Frame 0, SD 2 (8, 16, or 32): _____
- Frame 1, SD 1 and Frame 0, SD 3 (8, 16, or 32): _____

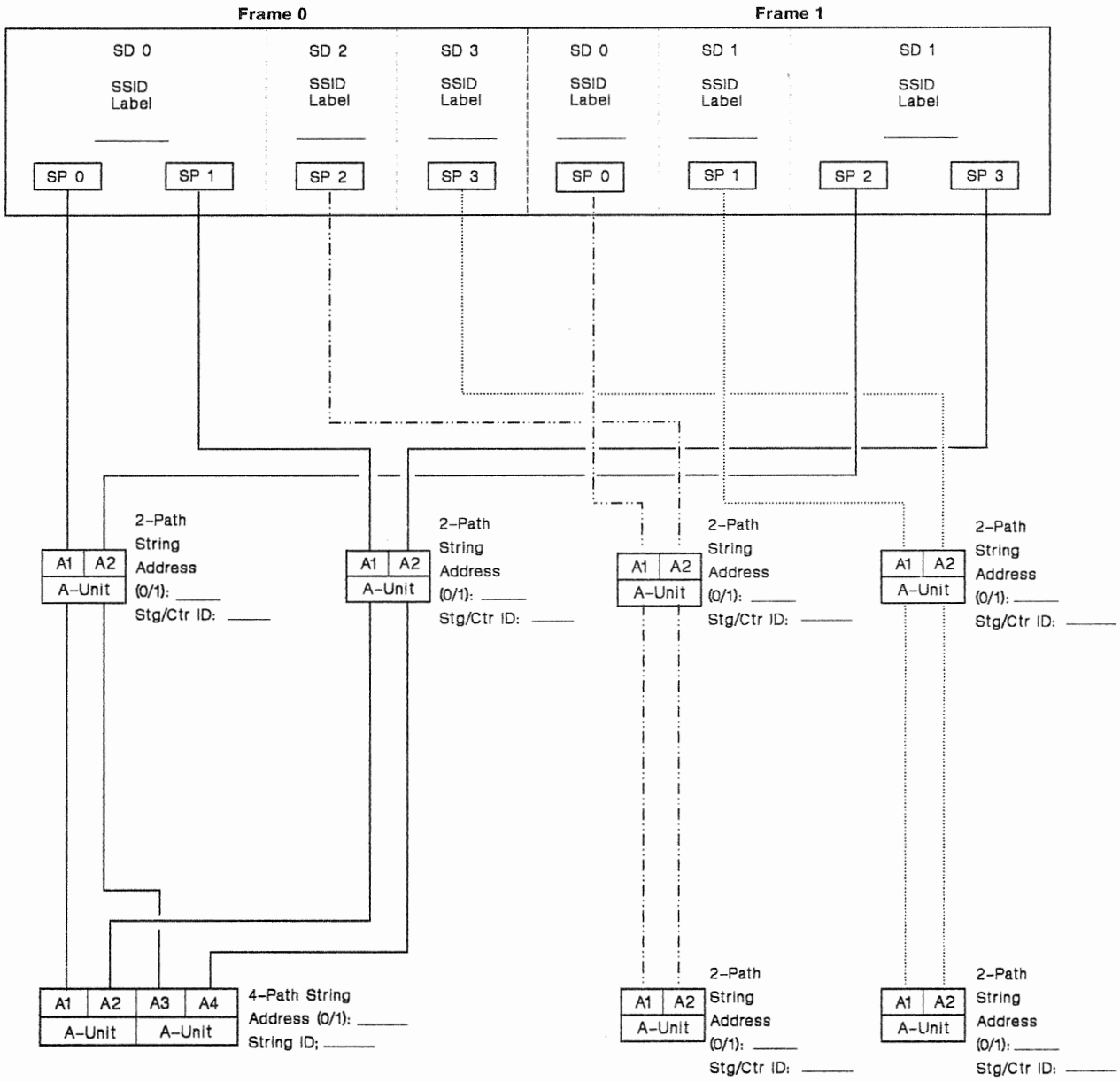

Legend

SD = Storage Director
SP = Storage Path
SSID = Subsystem Identifier
Stg/Ctr ID = String ID/Controller ID

NOTES:

1. One 2-path DASD string in each DLS logical DASD subsystem is optional.
2. One of the 2-path DASD strings in the DLSE logical DASD subsystem is optional.

SLVK0C14

Dual-Frame 3990 Model 2 or 3 Subsystem Configuration (DLSE Mode With Intermixed 4-Path and 2-Path DASD Strings and DLS Mode)

SSID for the Subsystem Attached to;
Frame 0, SD 0 and Frame 1, SD 1:_____
Frame 1, SD 0 and Frame 0, SD 2:_____
Frame 1, SD 1 and Frame 0, SD 3:_____

Number of Addressable Devices for the Subsystem Attached to:
Frame 0, SD 0 and Frame 1, SD 1 is: 64
Frame 1, SD 0 and Frame 0, SD 2 (8, 16, or 32):_____
Frame 1, SD 1 and Frame 0, SD 3 (8, 16, or 32):_____

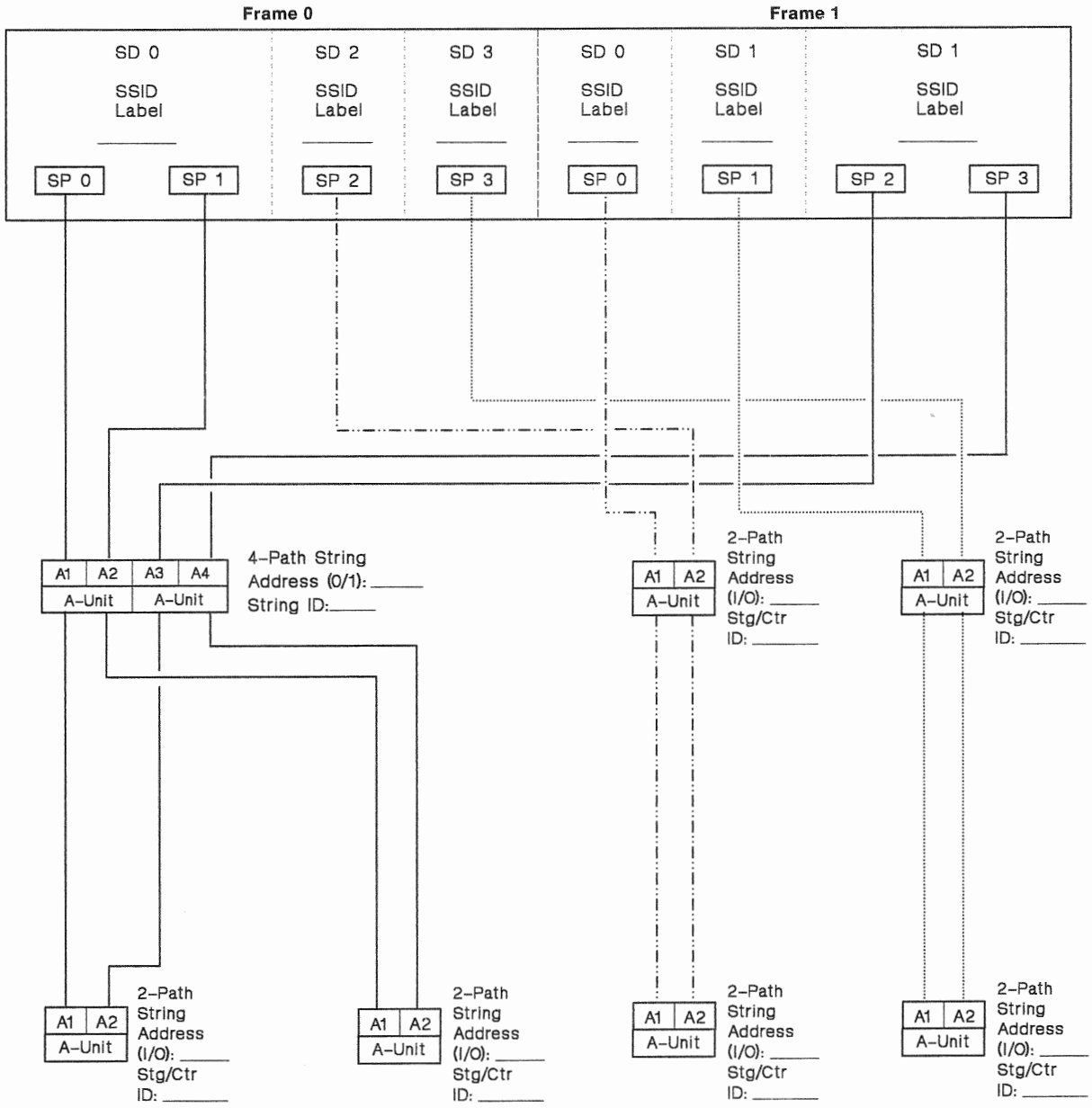

Legend

SD = Storage Director
SP = Storage Path
SSID = Subsystem Identifier
Str/Ctr ID = String ID/Controller ID

Notes: 1. One 2-path DASD string in each DLS logical DASD subsystem is optional.

2. One of the 2-path DASD strings in each DLSE logical DASD subsystem is optional.

SLVKOC15

Dual-Frame 3990 Model 2 or 3 Subsystem Configuration (DLSE Mode With Intermixed 2-Path and 4-Path DASD Strings and DLSE Mode)

SSID for the Subsystem Attached to:
Frame 0, SD 0 and Frame 1, SD 1: _____
Frame 0, SD 1 and Frame 1, SD 0: _____

Number of Addressable Devices for the Subsystem Attached to:
Frame 0, SD 0 and Frame 1, SD 1 is: 64
Frame 0, SD 1 and Frame 1, SD 0 (32 or 64): _____

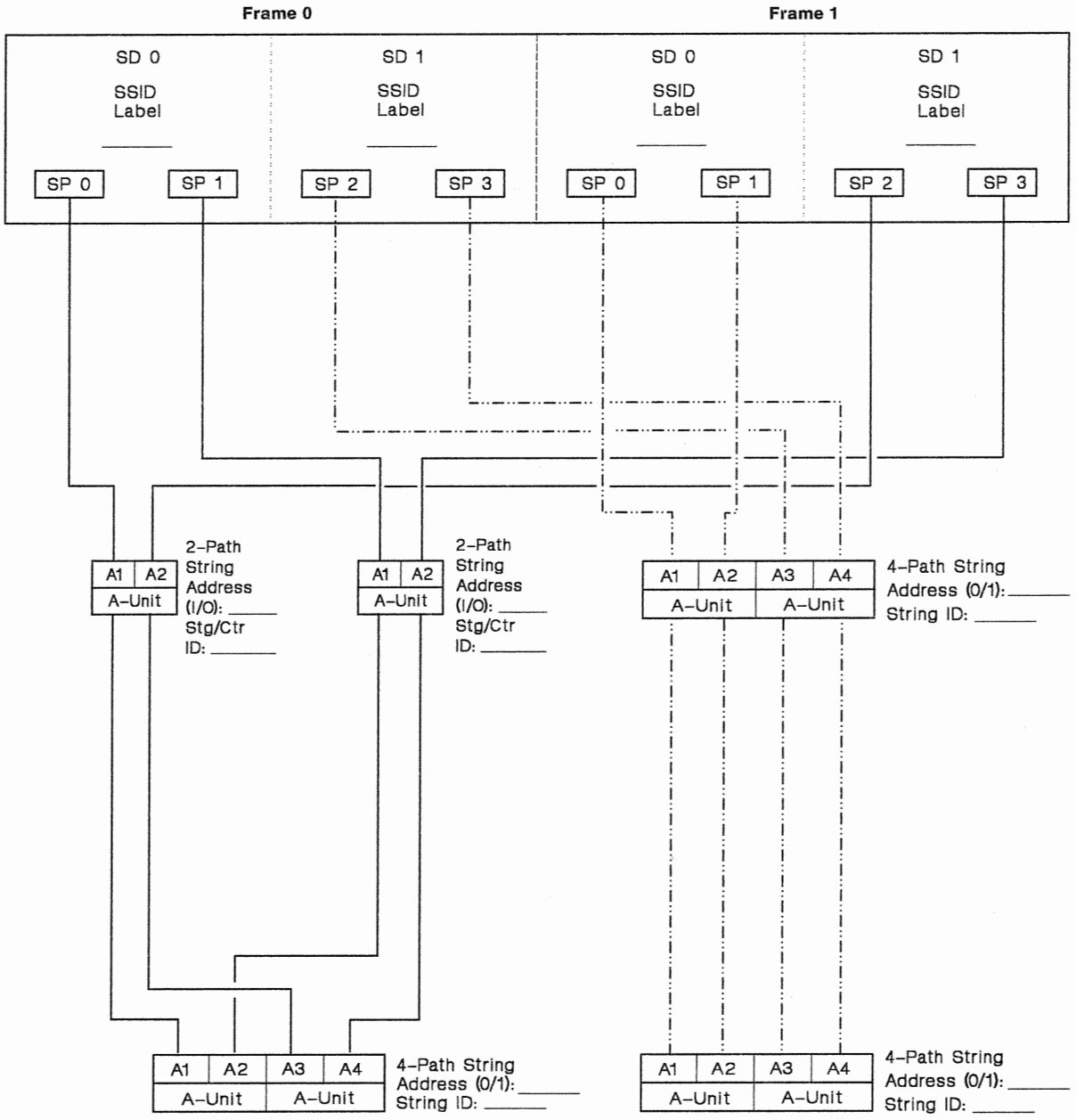

Legend

SD = Storage Director
SP = Storage Path
SSID = Subsystem Identifier
Str/Ctr ID = String ID/Controller ID

Notes: 1. One 2-path DASD string in the DLSE intermix logical DASD subsystem is optional.

2. One 4-path DASD string in the DLSE logical DASD subsystem is optional.

SLVKDC18

Dual-Frame 3990 Model 2 or 3 Subsystem Configuration (DLSE Mode With Intermixed 4-Path and 2-Path DASD Strings and DLSE Mode)

SSID for the Subsystem Attached to:
Frame 0, SD 0 and Frame 1, SD 1:_____
Frame 0, Sd 1 and Frame 1, SD 0:_____

Number of Addressable Devices for the Subsystem Attached to:
Frame 0, SD 0 and Frame 1, SD 1 is: 64
Frame 0, SD 1 and Frame 1, SD 0 (32 or 64):_____

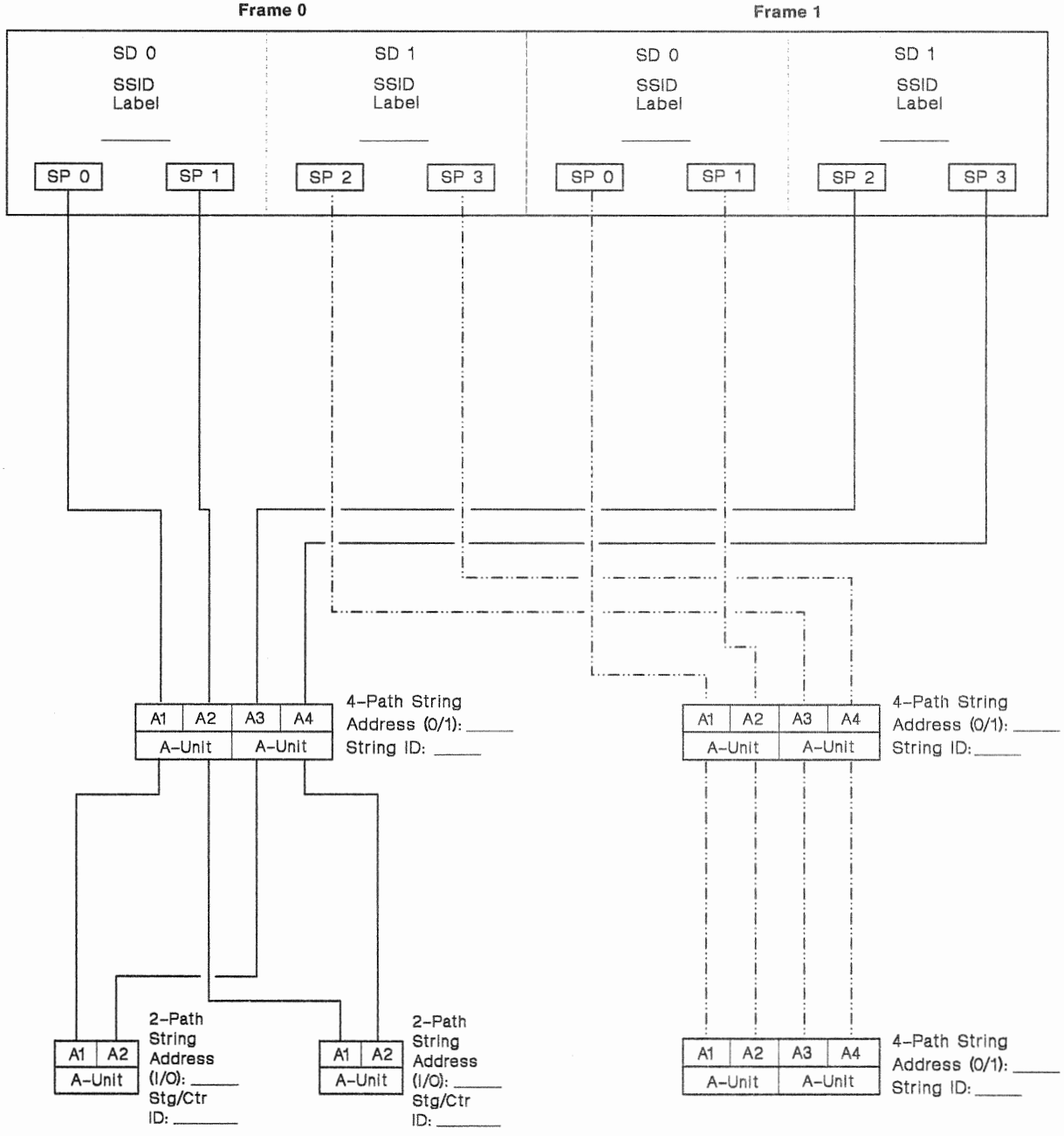

Legend

SD = Storage Director
SP = Storage Path
SSID = Subsystem Identifier
Str/Ctr ID = String ID/Controller ID

Notes:
1. One 2-path DASD string in the DLSE intermix logical DASD subsystem is optional.
2. One 4-path DASD string in the DLSE logical DASD subsystem is optional.

SLVKDC17

Dual-Frame 3990 Model 2 or 3 Subsystem Configuration (DLSE Mode and DLSE Mode With Intermixed 2-Path and 4-Path DASD Strings)

SSID for the Subsystem Attached to:
Frame 0, SD 0 and Frame 1, SD 1: _____
FRame 0, SD 1 and Frame 1, SD 0:_____

Number of Addressable Devices for the Subsystem Attached to:
Frame 0, SD 0 and Frame 1, SD 1 (32 or 64):_____
Frame 0, SD 1 and Frame 1, SD 0 is: 64

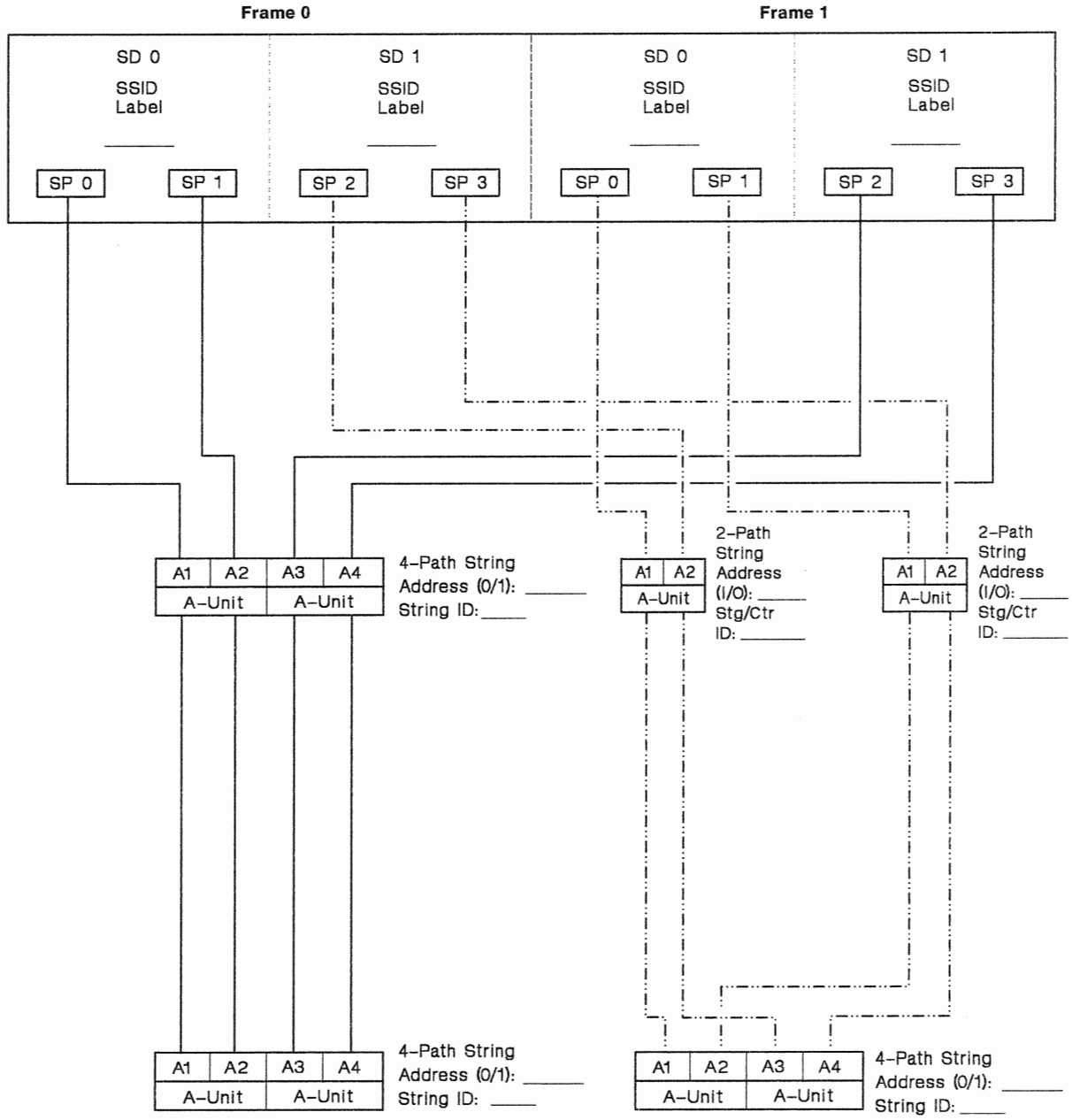

Legend

SD = Storage Director
SP = Storage Path
SSID = Subsystem Identifier
Str/Ctr ID = String ID/Controller ID

Notes: 1. One 2-path DASD string in the DLSE intermix logical DASD subsystem is optional.

2. One 4-path DASD string in the DLSE logical DASD subsystem is optional.

SLV/KDC18

Dual-Frame 3990 Model 2 or 3 Subsystem Configuration (DLSE Mode and DLSE Mode With Intermixed 4-Path and 2-Path DASD Strings)

SSID for the Subsystem Attached to:
Frame 0, SD 0 and Frame 1, SD 1: _____
Frame 0, SD 1 and Frame 1, SD 0: _____

Number of Addressable Devices for the Subsystem Attached to:
Frame 0, SD 0 and Frame 1, SD 1 (32 or 64): _____
Frame 0, SD 1 and Frame 1, SD 0 is: 64

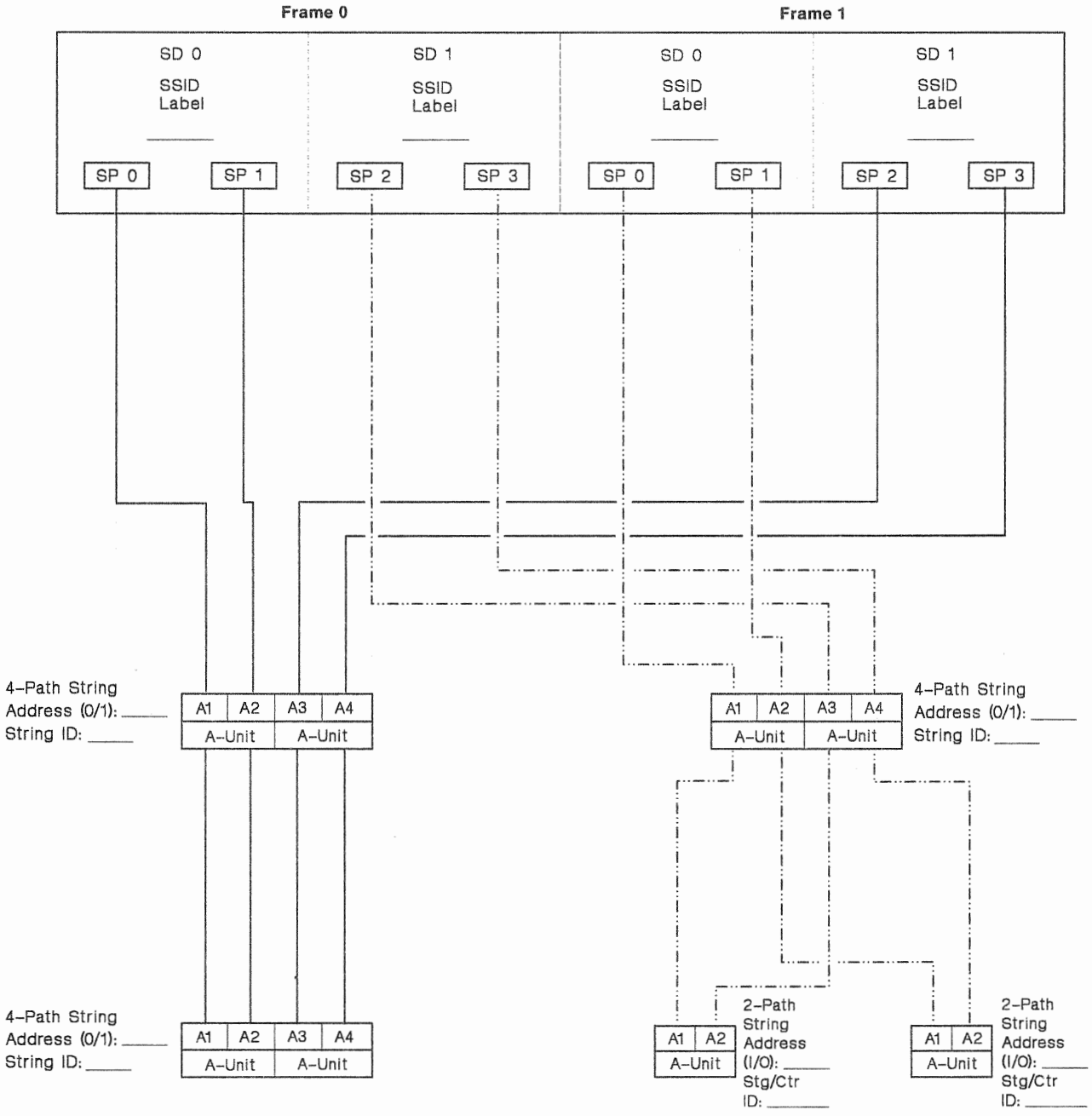

Legend

SD = Storage Director
SP = Storage Path
SSID = Subsystem Identifier
Str/Ctr ID = String ID/Controller ID

Notes: 1. One 2-path DASD string in the DLSE intermix logical DASD subsystem is optional.

2. One 4-path DASD string in the DLSE logical DASD subsystem is optional.

SLVKOC19

Appendix C. 3990 Vital Product Data Worksheets

This appendix contains a series of worksheets for you to record the 3990 vital product data. During the installation procedure, and during subsequent updates, 3990 softcopy maintenance analysis procedures (MAPs) instruct the service representative to enter the vital product data into the 3990's vital product data storage. The MAPs also store a copy of the vital product data in a "back-up" record on the diskette.

Note: The 3990 saves changes to the vital product data and activates the changes during the next 3990 IML.

How to Use the Vital Product Data Worksheets

1. Ensure you are familiar with the information in the IBM 3990 Storage Control Planning, Installation, and Storage Administration Guide.
2. Locate and copy the Appendix B, "3990 Configuration Planning Worksheets" that describe your 3990 model, subsystem mode, and configuration. Figure 85 on page 190 lists the worksheets you will need for each model and operating mode.
3. Complete the set of worksheets that describes your subsystem configuration.
4. Copy the appropriate Vital Product Data Worksheets from the following pages. Figure 86 lists the worksheets that you will need for each model and operating mode. **For dual-frame configurations, you will need two sets of the worksheets, one for each cluster pair**. A cluster pair is frame 0, cluster 0 and frame 1, cluster 1. The other pair is frame 1, cluster 0 and frame 0, cluster 1.
5. Transcribe the vital product data from the 3990 Configuration Planning Worksheets to the Configuration Data column of the appropriate Vital Product Data Worksheets.
6. Give a copy of both sets of the worksheets to the service representative that installs your 3990.

Model and Mode	Required Vital Product Data Worksheets
3990 Model 1 in DLS Mode	___ "3990 Features" on page 218 ___ "Subsystem Mode (DLS/DLSE)" on page 218 ___ "Subsystem Identifiers (SSIDs)" on page 219 ___ "Channel Speed (Cluster 0) Frame _____" on page 221 ___ "DLS Mode—Assigning Channels to 3990 Model 1 Storage Director 0 (Channel/Device Configuration Data)" on page 222 ___ "DLS Mode—Assigning Channels to 3990 Model 1 Storage Director 1 (Channel/Device Configuration Data)" on page 223 ___ "Cache Access Error Option—DLSE Mode and DLS Mode (Subsystem Attached to Storage Path 0)" on page 232 (3990 Model 3 only)

Figure 86 (Part 1 of 3). Vital Product Data Worksheets Required for Each 3990 Model

Model and Mode	Required Vital Product Data Worksheets
3990 Models 2 or 3 in DLS Mode	___ "3990 Features" on page 218 ___ "Subsystem Mode (DLS/DLSE)" on page 218 ___ "Subsystem Identifiers (SSIDs)" on page 219 ___ "Channel Speed (Cluster 0) Frame _____" on page 221 ___ "Channel Speed (Cluster 1) Frame _____" on page 221 ___ "DLS and DLSE Mode—Channel/Device Configuration Data —Storage Director 0, Frame _____" on page 225 ___ "DLS and DLSE Mode—Channel/Device Configuration Data—Storage Director 1, Frame _____" on page 227 ___ "DLS Mode Only—Channel/Device Configuration Data—Storage Director 2, Frame _____" on page 229 ___ "DLS Mode Only—Channel/Device Configuration Data—Storage Director 3, Frame _____" on page 230 ___ "Cache Access Error Option—DLSE Mode and DLS Mode (Subsystem Attached to Storage Path 0)" on page 232 ___ "Cache Access Error Option—DLS Mode Only (Subsystem Attached to Storage Path 1)" on page 232 (3990 Model 3 only)
3990 Models 2 or 3 in DLSE Mode	___ "3990 Features" on page 218 ___ "Subsystem Mode (DLS/DLSE)" on page 218 ___ "Subsystem Identifiers (SSIDs)" on page 219 ___ "Channel Speed (Cluster 0) Frame _____" on page 221 ___ "Channel Speed (Cluster 1) Frame _____" on page 221 ___ "DLS and DLSE Mode—Channel/Device Configuration Data —Storage Director 0, Frame _____" on page 225 ___ "DLS and DLSE Mode—Channel/Device Configuration Data—Storage Director 1, Frame _____" on page 227 ___ With number of addressable devices = 64 (two strings of 4-path DASD or intermixed strings of 2-path and 4-path DASD), use "DLSE Mode Only—Specifying DASD String Type (64 Devices Only)" on page 231. ___ "Cache Access Error Option—DLSE Mode and DLS Mode (Subsystem Attached to Storage Path 0)" on page 232 (3990 Model 3 only)

Figure 86 (Part 2 of 3). Vital Product Data Worksheets Required for Each 3990 Model

Model and Mode	Required Vital Product Data Worksheets
Dual-Frame 3990 Models 2 or 3 in DLS Mode	___ "3990 Features" on page 218 ___ "Subsystem Mode (DLS/DLSE)" on page 218 ___ "Subsystem Identifiers (SSIDs)" on page 219 ___ "Channel Speed (Cluster 0) Frame _____" on page 221 ___ "Channel Speed (Cluster 1) Frame _____" on page 221 ___ "DLS and DLSE Mode—Channel/Device Configuration Data —Storage Director 0, Frame _____" on page 225 ___ "DLS and DLSE Mode—Channel/Device Configuration Data—Storage Director 1, Frame _____" on page 227 ___ "DLS Mode Only—Channel/Device Configuration Data—Storage Director 2, Frame _____" on page 229 ___ "DLS Mode Only—Channel/Device Configuration Data—Storage Director 3, Frame _____" on page 230 ___ "Cache Access Error Option—DLSE Mode and DLS Mode (Subsystem Attached to Storage Path 0)" on page 232(3990 Model 3 only) ___ "Cache Access Error Option—DLS Mode Only (Subsystem Attached to Storage Path 1)" on page 232(3990 Model 3 only).
Dual-Frame 3990 Models 2 or 3 in DLSE Mode	___ "3990 Features" on page 218 ___ "Subsystem Mode (DLS/DLSE)" on page 218 ___ "Subsystem Identifiers (SSIDs)" on page 219 ___ "Channel Speed (Cluster 0) Frame _____" on page 221 ___ "Channel Speed (Cluster 1) Frame _____" on page 221 ___ "DLS and DLSE Mode—Channel/Device Configuration Data —Storage Director 0, Frame _____" on page 225 ___ "DLS and DLSE Mode—Channel/Device Configuration Data—Storage Director 1, Frame _____" on page 227 ___ With number of addressable devices = 64 (two strings of 4-path DASD or intermixed strings of 2-path and 4-path DASD), use "DLSE Mode Only—Specifying DASD String Type (64 Devices Only)" on page 231. ___ "Cache Access Error Option—DLSE Mode and DLS Mode (Subsystem Attached to Storage Path 0)" on page 232 (3990 Model 3 only)

Figure 86 (Part 3 of 3). Vital Product Data Worksheets Required for Each 3990 Model

3990 Features

Field Name	Field Value and Description	Configuration Data
Model	1 = 3990 Model 1 2 = 3990 Model 2 3 = 3990 Models G03, J03, L03, and Q03	
Number of Clusters	1 = 1 cluster (Model 1) 2 = 2 clusters (Models 2, G03, J03, L03, and Q03)	
Channels per Cluster	4 = 4 channels 8 = 8 channels (Four Channel Switch, Additional feature)	
Cache Size	000 = Cache is not installed (3990 Models 1 and 2) 032 = 32 Megabytes 064 = 64 Megabytes 128 = 128 Megabytes 256 = 256 Megabytes.	
Dual-Frame Configuration	0 = No 1 = Yes	
Dual-Frame Identifier (ID)	0 = Left frame 1 = Right frame N/A for single frame	

Subsystem Mode (DLS/DLSE)

Field Name	Field Value and Description	Configuration Data
Subsystem Mode	DLS = DLS mode (attaches only 2-path DASD strings) DLSE = DLSE mode (attaches 4-path DASD strings or intermixed 2-path and 4-path DASD strings)	

Subsystem Identifiers (SSIDs)

Field Name	Field Value and Description	Configuration Data
DLS Mode - SSIDs for Single Path Storage Directors (SD) 0 and 1 (3990 Model 1)	**For a 3990 Model 1 in DLS mode**, assign an SSID for storage director 0. SSIDs can be in the range 0001 to 00FF. We recommend assigning an even numbered SSID for storage director 0. The 3990 copies the storage director 0 SSID to storage director 1.	SSID for: SD 0:
DLS Mode - SSIDs for Single Path Storage Directors (SD) 0, 1, 2, and 3	**For 3990 Models 2 or 3 in DLS mode**, assign sequential SSIDs for storage directors 0 and 1. SSIDs can be in the range 0001 to 00FF. We recommend assigning an even numbered SSID for storage director 0. The SSID for storage director 1 (SD 1) must be one number higher than the SSID for storage director 0. The 3990 copies the storage director 0 SSID to storage director 2 and the storage director 1 SSID to storage director 3.	SSID for: SD 0: SD 1:
SSIDs for Dual-Frame 3990s in DLS Mode	**For dual-frame 3990 Models 2 or 3 in DLS mode**, we recommend that you assign four sequential SSIDs for frame 0, storage directors 0 and 1 and frame 1 storage directors 0 and 1. We recommend that you assign an even numbered SSID for frame 0, storage director 0.	SSID for: Frame 0, SD 0: Frame 0, SD 1: Frame 1, SD 0: Frame 1, SD 1:
DLSE Mode - SSIDs for Multipath Storage Directors (SD) 0 and 1	**For 3990 Models 2 or 3 in DLSE mode**, assign an SSID for storage director 0. SSIDs can be in the range 0001 to 00FF. The 3990 copies the storage director 0 SSID to storage director 1.	SSID for: SD 0:
SSIDs for Dual-Frame 3990s in DLSE Mode	**For dual-frame 3990 Models 2 or 3 in DLSE mode**, we recommend that you assign two sequential SSIDs for frame 0, storage director 0 and frame 1 storage director 0. We recommend that you assign an even numbered SSID for frame 0, storage director 0.	SSID for: Frame 0, SD 0: Frame 1, SD 0:
SSIDs for Dual-Frame 3990s in DLS and DLSE Mode	**For dual-frame 3990 Models 2 or 3 in DLS and DLSE mode**, we recommend that you assign three sequential SSIDs for the three logical DASD subsystems (2 DLS and 1 DLSE). SSIDs can be in the range 0001 to 00FF. The physical configuration will determine which storage directors are attached to each subsystem. We recommend that you assign an even numbered SSID for frame 0, storage director 0 and frame 1, storage director 0.	SSID for: Frame 0, SD 0: Frame 0, SD 1: Frame 1, SD 0:

Field Name	Field Value and Description	Configuration Data
SSIDs for Dual-Frame 3990s in DLSE and DLS Mode	**For dual-frame 3990 Models 2 or 3 in DLSE and DLS mode**, we recommend that you assign three sequential SSIDs for the three logical DASD subsystems (1 DLSE and 2 DLS). SSIDs can be in the range 0001 to 00FF. The physical configuration will determine which storage directors are attached to each subsystem. We recommend that you assign an even numbered SSID for frame 0, storage director 0 and frame 1, storage director 0.	SSID for: Frame 0, SD 0: Frame 1, SD 0: Frame 1, SD 1:

Channel Speed (Cluster 0) Frame _____

Field Name	Field Value and Description	Configuration Data
Channel Speed for Cluster 0	Channel speeds can be 3 or 4.5 megabytes per second. Specify a channel speed for each channel interface that is attached to storage cluster 0. Specify the planned channel speed for unused channel interfaces. If channel interfaces E - H are not installed, specify N/A.	Channel Speed A: B: C: D: E: F: G: H:

Channel Speed (Cluster 1) Frame _____

Field Name	Field Value and Description	Configuration Data
Channel Speed for Cluster 1	Channel speeds can be 3 or 4.5 megabytes per second. Specify a channel speed for each channel interface that is attached to storage cluster 1. Specify the planned channel speed for unused channel interfaces. If channel interfaces E - H are not installed, specify N/A.	Channel Speed A: B: C: D: E: F: G: H:

Note: For dual-frame configurations, cluster 1 is in the alternate frame.

Assigning Channels to 3990 Model 1 Storage Directors

For the 3990 Model 1, assign each channel to **one and only one** storage director. For any channel **not assigned** to a storage director, enter a storage director control unit address of X'FF'.

DLS Mode—Assigning Channels to 3990 Model 1 Storage Director 0 (Channel/Device Configuration Data)

Note: When you assign a channel to one 3990 Model 1 storage director, you cannot assign that channel to the other storage director.

You must enter X'FF' as the storage director control unit address for each channel that is not assigned to the storage director.

Field Name	Field Value and Description	Configuration Data
Number of Addressable Devices for 3990 Model 1 Logical DASD Subsystem 0	Specify the number of addressable devices for the logical DASD subsystem. We recommend that you use the maximum planned number of devices on the subsystem. In DLS mode, the number of addressable devices can be 8, 16, or 32.	Number of Devices:
Control Unit Addresses for 3990 Model 1 Storage Director 0	The hexadecimal control unit (CU) address is the high-order part of each device address. **For storage director 0, specify a control unit address for each channel.** **For each channel that you do not want to assign to storage director 0, enter the control unit address X'FF'.** For 8 or 16 devices, the DASD string address (0 or 1) determines the control unit addresses you can assign each storage director. For 32 devices, the control unit addresses are not changed by the string address. **For 8 or 16 devices with string address 0**: CU addresses can be: 00, 20, 40, 60, 80, A0, C0, or E0. **For 8 or 16 devices with string address 1**: CU addresses can be: 10, 30, 50, 70, 90, B0, D0, or F0. **For 32 devices**: CU addresses can be: 00, 20, 40, 60, 80, A0, C0, or E0.	SD 0 CU Addresses A: B: C: D: E: F: G: H:

DLS Mode—Assigning Channels to 3990 Model 1 Storage Director 1 (Channel/Device Configuration Data)

Note: When you assign a channel to one 3990 Model 1 storage director, you cannot assign that channel to the other storage director.

You must enter X'FF' as the storage director control unit address for each channel that is not assigned to the storage director.

Field Name	Field Value and Description	Configuration Data
Number of Addressable Devices for 3990 Model 1 Logical DASD Subsystem 0	Specify the number of addressable devices for the logical DASD subsystem. This is the same number you specified on the table for storage director 0. In DLS mode, the number of addressable devices can be 8, 16, or 32.	Number of Devices:
Control Unit Addresses for 3990 Model 1 Storage Director 1	The hexadecimal control unit (CU) address is the high-order part of each device address. **For storage director 1, specify a control unit address for each channel.** **For each channel that you do not want to assign to storage director 1, enter the control unit address X'FF'.** For 8 or 16 devices, the DASD string address (0 or 1) determines the control unit addresses you can assign each storage director. For 32 devices, the control unit addresses are not changed by the string address. **For 8 or 16 devices with string address 0**: CU addresses can be: 00, 20, 40, 60, 80, A0, C0, or E0. **For 8 or 16 devices with string address 1**: CU addresses can be: 10, 30, 50, 70, 90, B0, D0, or F0. **For 32 devices**: CU addresses can be: 00, 20, 40, 60, 80, A0, C0, or E0.	SD 1 CU Addresses A: B: C: D: E: F: G: H:

Specifying the Number of Addressable Devices and Control Unit Addresses for 3990 Models 2 and 3

Specify the number of addressable devices for each logical DASD subsystem.

The MAPs instruct the service representative to enter or verify the number of addressable devices for each storage director. Thus, the tables that pertain to specifying control unit addresses for each storage director require you to record the number of addressable devices for each logical DASD subsystem.

Specify the control unit addresses for each storage director on each channel to which the storage director is attached. For 3990 Models 2 and 3, all channels attached to a storage cluster are available to all storage paths in that cluster.

In DLS mode, if a channel (A-H) is set to access both storage directors in a cluster, each storage director must use a different address range.

DLS and DLSE Mode—Channel/Device Configuration Data —Storage Director 0, Frame _____

Notes:

1. For each channel that is not used by this storage director, specify a storage director control unit address of X'FF'.
2. In DLS mode, if a channel (A-H) is set to access both storage directors in a cluster, each storage director must use a different address range.

Field Name	Field Value and Description	Configuration Data
Number of Addressable Devices for Logical DASD Subsystem 0	Specify the number of addressable devices for logical DASD subsystem 0. **In DLS mode, the number of addressable devices can be 0, 8, 16, or 32.** The values 8 and 16 specify single strings; 32 specifies two strings; 0 specifies NO strings. Specify the same value for storage directors 0 and 2. **In DLSE mode, the number of addressable devices can be 32 or 64.** The value 32 specifies a single 4-path DASD string. If the subsystem includes two 4-path strings or 2-path strings intermixed with a 4-path DASD string, you must specify the value 64. Specify the same value for storage directors 0 and 1.	Number of Devices:

Field Name	Field Value and Description	Configuration Data
Control Unit Addresses for Storage Director 0	The hexadecimal control unit (CU) address is the high-order part of each device address. For single DASD strings, the string address (0 or 1) determines the control unit addresses you can assign each storage director. For two DASD strings, the string addresses do not affect the control unit addresses. **In DLS Mode**: For 8 or 16 devices with string address 0, CU addresses can be: 00, 20, 40, 60, 80, A0, C0, or E0. For 8 or 16 devices with string address 1, CU addresses can be: 10, 30, 50, 70, 90, B0, D0, or F0. For 32 devices, CU addresses can be: 00, 20, 40, 60, 80, A0, C0, or E0. **In DLSE Mode**: For 32 devices and string address 0, CU addresses can be: 00, 40, 80, or C0. For 32 devices and string address 1, CU addresses can be: 20, 60, A0, or E0. For 64 devices, CU addresses can be: 00, 40, 80, or C0.	SD 0 CU Addresses A: B: C: D: E: F: G: H:

DLS and DLSE Mode—Channel/Device Configuration Data—Storage Director 1, Frame _____

Notes:

1. For each channel that is not used by this storage director, specify a storage director control unit address of X'FF'.
2. In DLS mode, if a channel (A-H) is set to access both storage directors in a cluster, each storage director must use a different address range.

Field Name	Field Value and Description	Configuration Data
DLS Mode - Number of Addressable Devices for Logical DASD Subsystem 1	**In DLS mode**: Specify the number of addressable devices for logical DASD subsystem 1. The number of addressable devices can be 0, 8, 16, or 32. The values 8 and 16 specify single strings; 32 specifies two strings; 0 specifies NO strings. Specify the same value for storage directors 1 and 3.	Number of Devices:
DLSE Mode - Number of Addressable Devices for Logical DASD Subsystem 0 (the same value you specified for storage director 0)	**In DLSE mode**: Specify Specify the number of addressable devices for logical DASD subsystem 0 (this is the same value that you specified for storage director 0). The value can be 32 or 64. The value 32 specifies a single 4-path DASD string. If the subsystem includes two 4-path strings or 2-path strings intermixed with a 4-path string, you must specify the value 64. Specify the same value for storage directors 0 and 1.	

Field Name	Field Value and Description	Configuration Data
Control Unit Addresses for Storage Director 1	The hexadecimal control unit (CU) address is the high-order part of each device address. For single DASD strings, the string address (0 or 1) determines the control unit addresses you can assign each storage director. For two DASD strings, the string addresses do not affect the control unit addresses. **In DLS Mode**: For 8 or 16 devices with string address 0, CU addresses can be: 00, 20, 40, 60, 80, A0, C0, or E0. For 8 or 16 devices with string address 1, CU addresses can be: 10, 30, 50, 70, 90, B0, D0, or F0. For 32 devices, CU addresses can be: 00, 20, 40, 60, 80, A0, C0, or E0. **In DLSE Mode**: For 32 devices and string address 0, CU addresses can be: 00, 40, 80, or C0. For 32 devices and string address 1, CU addresses can be: 20, 60, A0, or E0. For 64 devices, CU addresses can be: 00, 40, 80, or C0.	SD 1 CU Addresses A: B: C: D: E: F: G: H:

DLS Mode Only—Channel/Device Configuration Data—Storage Director 2, Frame _____

Notes:

1. For each channel that is not used by this storage director, specify a storage director control unit address of X'FF'.
2. In DLS mode, if a channel (A-H) is set to access both storage directors in a cluster, each storage director must use a different address range.

Field Name	Field Value and Description	Configuration Data
Number of Addressable Devices for Logical DASD Subsystem 0	Specify the number of addressable devices for logical DASD subsystem 0. In DLS mode, the number of addressable devices can be 0, 8, 16, or 32. The values 8 and 16 specify single strings; 32 specifies two strings; 0 specifies NO strings. Specify the same value for storage directors 0 and 2.	Number of Devices:
Control Unit Addresses for Storage Director 2	The hexadecimal control unit (CU) address is the high-order part of each device address. For single DASD strings, the string address (0 or 1) determines the control unit addresses you can assign each storage director. For two DASD strings, the string addresses do not affect the control unit addresses. **In DLS Mode**: For 8 or 16 devices with string address 0, CU addresses can be: 00, 20, 40, 60, 80, A0, C0, or E0. For 8 or 16 devices with string address 1, CU addresses can be: 10, 30, 50, 70, 90, B0, D0, or F0. For 32 devices, CU addresses can be: 00, 20, 40, 60, 80, A0, C0, or E0.	SD 2 CU Addresses A: B: C: D: E: F: G: H:

DLS Mode Only—Channel/Device Configuration Data—Storage Director 3, Frame _____

Notes:

1. For each channel that is not used by this storage director, specify a storage director control unit address of X'FF'.
2. In DLS mode, if a channel (A-H) is set to access both storage directors in a cluster, each storage director must use a different address range.

Field Name	Field Value and Description	Configuration Data
Number of Addressable Devices for Logical DASD Subsystem 1	Specify the number of addressable devices for logical DASD subsystem 1. In DLS mode, the number of addressable devices can be 0, 8, 16, or 32. The values 8 and 16 specify single strings; 32 specifies two strings; 0 specifies NO strings. Specify the same value for storage directors 1 and 3.	Number of Devices:
Control Unit Addresses for Storage Director 3	The hexadecimal control unit (CU) address is the high-order part of each device address. For single DASD strings, the string address (0 or 1) determines the control unit addresses you can assign each storage director. For two DASD strings, the string addresses do not affect the control unit addresses. **In DLS Mode**: For 8 or 16 devices with string address 0, CU addresses can be: 00, 20, 40, 60, 80, A0, C0, or E0. For 8 or 16 devices with string address 1, CU addresses can be: 10, 30, 50, 70, 90, B0, D0, or F0. For 32 devices, CU addresses can be: 00, 20, 40, 60, 80, A0, C0, or E0.	SD 3 CU Addresses A: B: C: D: E: F: G: H:

DLSE Mode Only—Specifying DASD String Type (64 Devices Only)

Field Name	Field Value and Description	Configuration Data
Device String Types for Storage Paths 0 and 1	**These values ONLY apply to DLSE mode with a maximum of 64 devices**. The 3990 needs to know if both strings are 4-path DASD, and if not, which string address is assigned to the 4-path string and which string address is assigned to the 2-path string(s). Specify the value 2 to identify the string address of the 2-path string(s). Specify the value 4 to identify the string address of the 4-path string(s). For strings of 2-path DASD intermixed with a 4-path string, specify the value 2 to identify the string address of the 2-path string. Specify the value 4 to identify the string address of the 4-path string.	String 0: String 1:

Cache Access Error Option—DLSE Mode and DLS Mode (Subsystem Attached to Storage Path 0)

Field Name	Field Value and Description	Configuration Data
Cache Access Error Option	Cache Access Error Option values can be 00, 01, or 02. 00 = Cache is not installed. 01 = Stop all caching for the subsystem when a cache access error occurs. Continue to access DASD directly through the storage paths. All dual copy pairs are set to suspended duplex state. We recommend this option when alternate path capability does not exist for all channel paths and access to DASD on all paths is required to prevent stopping an application. 02 = Fence the failing storage path and continue caching on all remaining storage paths when a cache access error occurs. We recommend this option when all channel paths have alternate path capability and caching performance is required to maintain system performance levels.	

Cache Access Error Option—DLS Mode Only (Subsystem Attached to Storage Path 1)

Field Name	Field Value and Description	Configuration Data
Cache Access Error Option	Cache Access Error Option values can be 00, 01, or 02. 00 = Cache is not installed. 01 = Stop all caching for the subsystem when a cache access error occurs. Continue to access DASD directly through the storage paths. All dual copy pairs are set to suspended duplex state. We recommend this option when alternate path capability does not exist for all channel paths and access to DASD on all paths is required to prevent stopping an application. 02 = Fence the failing storage path and continue caching on all remaining storage paths when a cache access error occurs. We recommend this option when all channel paths have alternate path capability and caching performance is required to maintain system performance levels.	

This is the end of the installation-supplied vital product data.

Vital Product Data Supplied by the Service Representative

Record the data in the following fields during the installation. Key or verify the data as it is displayed on the maintenance panel screen.

Machine Type and Data Link Type

Field Name	Field Value and Description	Configuration Data
Machine Type	3990 = 3990 (all models)	3990
Data Link	1 = Dial-up modem 3 = Auto-answer modem	

Serial Number/Hardware Level

Field Name	Field Value and Description	Configuration Data
Serial Number	A seven-digit number (2-digit plant of manufacture and 5-digit frame number.) This number is stamped on the rear of the frame, on the inside of the right vertical frame member.	
Hardware Level Identifier	The three-character hardware level identifier (see the Machine History).	
Cluster Number	0 or 1 = the cluster that you are configuring. **Warning:** Ensure that you enter the correct cluster number. Results are not predictable if you enter the wrong cluster number.	

Nonvolatile Storage Data

Field Name	Field Value and Description	Configuration Data
NVS Battery Manufacturing Date	The NVS battery manufacturing date in the format "yddd" (the last digit of the year, followed by the three-character day-of-year number). The date is on the NVS battery assembly as the first 4 characters of a 5-character code.	

Appendix D. Messages and Codes

This appendix describes a subset of the MVS, VM, and VSE messages and codes that support the 3990.

Preliminary Message Descriptions

Consult the Messages and Codes manual for your operating system for the latest message descriptions.

Programs that filter and/or route console messages should be reviewed to take into account SIMs and other new messages.

The major sections in this appendix include:

- "MVS Messages and Codes"
  - "MVS—IDCAMS Messages and Codes" on page 238
  - "MVS—DFDSS Messages and Codes" on page 243
- "VM/SP and VM/SP HPO Messages and Codes" on page 244
- "VSE Messages and Codes" on page 247.

MVS Messages and Codes

The following headings describe selected MVS messages provided to support the 3990.

IEA448I 1,SENSE DATA LOGGED FOR DEVICE ss.p-xx-xx

IEA448I 2,SENSE DATA LOGGED FOR CONTROLLER ss.p-xx-xx

Explanation: The specified device or controller has returned environmental data. The data has been written to SYS1.LOGREC.

ss	Subsystem ID (SSID)
p	storage path
xx-xx	Controller device

- Descriptor code = 4
- Routing Code = 1,6

System Action: Processing continues.

Operator Response: Notify the system programmer.

Problem Determination: None.

IEA473I vvvvvv FENCED FROM STORAGE PATH x cuu/ssid.p-cc-nn

Explanation: Device **nn** is unavailable through storage path **x** due to a hardware error. An explanation of each of the fields in the message text follows:

vvvvvv	The volume that failed
x	The storage path fenced
cuu	The physical device address
ssid	The subsystem identifier
p	The storage path
cc	The controller address
nn	The device number.

- Descriptor code = 4
- Routing Code = 1,6

System Action: The subsystem attempts to recover the operation using an alternate path.

Operator Response: The system issues this message because of a hardware error. Follow your installation's procedures for reporting this error.

IEA480E cuu,{SCU|CACHE}, {ACUTE|SERIOUS|MODERATE|SERVICE} ALERT,MT = mt, SER = ser,REFCODE = refcode

Explanation: IEA480E is a Service Information Message (SIM) Alert console message. The storage director has detected an abnormal condition that requires service attention. ACUTE|SERIOUS|MODERATE|SERVICE indicate the severity of the SIM Alert message. ACUTE is the most severe and SERVICE is the least severe. An explanation of each of the fields in the message text follows:

cuu	Address of unit that reported the SIM message.
SCU	A 3990 storage control unit error that is not related to cache or nonvolatile storage. See **mt** for machine type.
CACHE	A 3990 storage control error that is related to cache or nonvolatile storage. See **mt** for machine type.
mt	Machine type that caused the SIM message.
ser	Serial number of unit referenced by the SIM message.
refcode	An error reference code.

- Descriptor code = 2
- Routing Code = 1,6

System Action: The system logs an alert record in SYS1.LOGREC and continues processing.

Operator Response: The system issues this message to indicate that service attention is required. Follow your installation's procedures for obtaining service.

IEA481I CONTROLLER n OF SP y NOT OPERATIONAL cuu/ssid.p-cc-nn

Explanation: The specified DASD controller cannot be accessed through the specified storage path. Sense bytes are provided to help fault isolation.

n	The controller address
y	The storage path
cuu	The physical device address
ssid	The subsystem identifier
p	The storage path
cc	The controller address
nn	The device number.

- Descriptor code = 4
- Routing Code = 1,6

System Action: Processing continues.

Operator Response: The system issues this message because of a hardware error. Follow your installation's procedures for reporting this error.

IEA484I CACHING STATUS RESET TO DEFAULT - ssid

Explanation: The assigned caching status could not be determined. Status has been set to the default state. An explanation of each of the fields in the message text follows:

ssid	The subsystem identifier.

System Action: Operation continues with cache available and active on all devices. Cache Fast Write is Active.

Operator Response: Restore Subsystem to the normal status for the installation.

IDC01552I SUBSYSTEM CACHING STATUS: *stat* **DEV X'***ddd***'**

Explanation: This message is routed to the systems console by the LISTDATA command in response to a request for status with the WTO parameter.

Note: May appear with IDC01553I, IDC01554I, IDC01555I, and IDC01556I

In the message text:

- *stat* can be any of the following:
  - ACTIVE if the subsystem is active.
  - ACTIVATION PENDING if the cache is being brought online.
  - DEACTIVATED-SUBSYS when an internal subsystem error caused caching termination.
  - DEACTIVATED-HOST when an explicit host system request caused caching termination.
  - DEACTIVATION PENDING when a request for deactivation has been received and the operation is in progress.
  - DEACTIVATION FAILED when a request for deactivation was received and the operation failed.
  - **** when the status is represented by an undefined bit combination.
- *ddd* is the device number (XA) or the device address (370) on which the I/O was done.

System Action: Processing continues. A full status report appears on SYSPRINT or in the alternate data set described in the procedure used to issue the LISTDATA command.

Programmer Response: None.

IDC01553I NVS STATUS: *stat* **DEV X'***ddd***'**

Explanation: This message is routed to the systems console by the LISTDATA command in response to a request for status with the WTO parameter.

Note: May appear with IDC01552I, IDC01554I, IDC01555I, and IDC01556I

In the message text:

- *stat* can be any of the following:
  - ACTIVE if the Nonvolatile Storage is active.
  - DEACTIVATED-SUBSYSTEM ERROR when an internal subsystem error caused Nonvolatile Storage termination.
  - DEACTIVATED-HOST COMMAND when an explicit host system request caused Nonvolatile Storage termination.

- DEACTIVATION IN PROGRESS when a request for deactivation has been received and the destage is in progress.
- DEACTIVATION FAILED when a request for deactivation was received and the destage failed.
- DISABLED when the Nonvolatile Storage is disabled for maintenance.

- *ddd* is the device number (XA) or the device address (370) on which the I/O was done.

System Action: Processing continues. A full status report appears on SYSPRINT or in the alternate data set described in the procedure used to issue the LISTDATA command.

Programmer Response: None.

IDC01554I DASD FAST WRITE STATUS: *stat* **DEV X'***ddd***'**

Explanation: This message is routed to the systems console by the LISTDATA command in response to a request for status with the WTO parameter.

Note: May appear with IDC01552I, IDC01553I, IDC01555I, and IDC01556I

In the message text:

- *stat* can be any of the following:
  - ACTIVE if DASD fast write is active.
  - DEACTIVATION PENDING when transfer of modified DASD fast write data to DASD failed.
  - DEACTIVATED when DASD fast write is disabled.
  - **** when the status is represented by an undefined bit combination.
- *ddd* is the device number (XA) or the device address (370) on which the I/O was done.

System Action: Processing continues. A full status report appears on SYSPRINT or in the alternate data set described in the procedure used to issue the LISTDATA command.

Programmer Response: None.

IDC01555I DUPLEX PAIR STATUS: *stat pri/sec* **DEV X'***ddd***'** *pri/sec* **DEV X'***xx***'**

Explanation: This message is routed to the systems console by the LISTDATA command in response to a request for status with the WTO parameter when the device in the status request is part of a duplex pair.

Note: May appear with IDC01552I, IDC01553I, IDC01554I, and IDC01556I

In the message text:

- *stat* can be any of the following:
  - ACTIVE if the duplex pair is active.
  - PENDING when the copy to establish a duplex pair is in progress.

- SUSPENDED when the duplex pair is suspended by a host command, for example, SETCACHE SUSPENDPRIMARY/SUSPENDSECONDARY, or by the subsystem.

- *pri/sec* is either PRI or SEC depending on whether the addressed device is the primary or the secondary.
- *ddd* is the device number (XA) or the device address (370) on which the I/O was done.
- *xx* is the channel connection address (CCA) of the other device in the duplex pair returned in the Sense Subsystem Status data.

System Action: Processing continues. A full status report appears on SYSPRINT or in the alternate data set described in the procedure used to issue the LISTDATA command.

Programmer Response: None.

IDC01556I CACHE FAST WRITE STATUS: *stat* **DEV X'***ddd***'**

Explanation: This message is routed to the systems console by the LISTDATA command in response to a request for status with the WTO parameter.

Note: May appear with IDC01552I, IDC01553I, IDC01554I, and IDC01555I

In the message text:

- *stat* can be any of the following:
  - ACTIVE if cache fast write is active.
  - DISABLED if cache fast write is disabled.
- *ddd* is the device number (XA) or the device address (370) on which the I/O was done.

System Action: Processing continues. A full status report appears on SYSPRINT or in the alternate data set described in the procedure used to issue the LISTDATA command.

Programmer Response: None.

IDC01557I ACCESS CODE FOR SCU X'*scu* **SC X'***sc***' IS X'***acode***'**

Explanation: The LISTDATA command to retrieve the remote access authorization code was successful. One message is routed to the system console for each storage cluster.

In the message text:

- *scu* is the box serial number.
- *sc* is the 2 hexadecimal digit storage cluster number.
- *acode* is the 8 hexadecimal digit remote access code.

System Action: Processing continues.

Programmer Response: None.

Severity: 0

IDC11614I AUTHORIZATION CHECKING HAS BEEN BYPASSED

Explanation: An IDCAMS command was issued which requires authorization checking. That checking was not possible. The RACROUTE macro instruction is used to invoke the SAF MVS router system interface to check alter authorization. The DASDVOL alter authorization checking is bypassed and execution of the command continues.

In the message text:

reason

- *NO METHOD FOR ACCESS AUTHORIZATION IS IN PLACE.*-RACF or a user supplied processing routine is not available to do DASDVOL alter authorization checking. This reason can result if a LISTDATA ACCESSCODE... command is issued.
- *VOLSER NOT AVAILABLE FOR THE OFFLINE DEVICE.*-The VOLSER on the offline device could not be read, resulting in no VOLSER being available to do DASDVOL alter authorization checking. This reason can result if the LISTDATA ACCESSCODE command is issued.

System Action: Processing continues.

Programmer Response: None.

Severity: 4

IDC21558I THE REQUEST FOR AN ACCESS CODE CANNOT BE COMPLETED FOR CLUSTER X'*cluster' reason*

Explanation: The LISTDATA command to retrieve the remote access authorization code was not successful for the reason specified.

In the message text:

- *cluster* is the 2 hexadecimal digit storage cluster number.
- *reason*
  - *-THE SUPPORT FACILITY IS NOT AVAILABLE*
  - *-THE MODEM ENABLE/DISABLE SWITCH IS NOT ENABLED*

System Action: Processing continues.

Programmer Response: Probable user error, ascertain why the access authorization code was not returned from the reason specified and resubmit the request when the access code is obtainable.

Severity: 8

IDC31562I THE ACCESSCODE PARAMETER IS NOT AVAILABLE FOR THE SPECIFIED SUBSYSTEM OR DEVICE

Explanation: A LISTDATA ACCESSCODE command was issued. A parameter was encountered, which is not supported on the device specified. This message is also printed if LISTDATA ACCESSCODE is issued to the secondary device of a duplex pair.

System Action: Processing continues.

Programmer Response: Resubmit the job specifying an appropriate subsystem.

Severity: 12

IDC31607I THE SPECIFIED COMMAND REQUIRES ALTER AUTHORIZATION. THE USER DOES NOT HAVE SUFFICIENT ACCESS AUTHORITY FOR *volume* TO BE INCLUDED IN A LISTDATA ACCESSCODE

Explanation: A LISTDATA ACCESSCODE... request was issued and the requestor does not have DASDVOL alter authority for the volume specified.

In the message text:

- *volume* is volser from LISTDATA ACCESSCODE command.

System Action: Processing continues.

Programmer Response: Get alter authorization for the volume and resubmit the IDCAMS job.

Severity: 12

MVS—DFDSS Messages and Codes

The following headings describe Data Facility Data Set Services (DFDSS) messages that are modified for 3990 support. See the *DFDSS User's Guide and Reference* for descriptions of these and other DFDSS messages.

DFDSS DUMP Operation—OPTIMIZE Parameter

If OPTIMIZE(2), (3), or (4) is specified and the source DASD volume has some paths that do and others that do not support the Read Multiple Count, Key, and Data channel command, it is possible that the operator will receive message IEA000I (command reject on X'5E' or X'DE') from the control unit that does not support the channel command. This will not cause any loss of data. It can cause performance degradation. It also causes unnecessary entries to the ERDS. To avoid this, either use OPTIMIZE(1) or vary the alternate path off the volume that does not support the failing channel command. You can also avoid this by upgrading your control units to support X'5E' and X'DE' channel commands.

ADR315I (xxx)-mmmmm(yy), REQUIRED CHANNEL COMMANDS NOT SUPPORTED ON VOLUME volser. OPTIMIZE(1) WILL BE USED

Explanation: The device supports neither the Read Multiple Count, Key, and Data nor the Read Track channel command, or I/O errors were encountered while testing whether the Read Multiple Count, Key, and Data and the Read Track channel commands are supported on the device. OPTIMIZE(2), OPTIMIZE(3), and OPTIMIZE(4) are applicable only if one or more of these channel commands is supported. This may also occur if the device can be accessed via multiple control units, some of which do and some of which do not support the channel commands.

System Action: OPTIMIZE(1) is used to run the DUMP function.

Programmer Response: To get the performance advantages, ensure that all control units attached to the device support either the Read Multiple Count, Key, and Data or Read Track channel command.

Operator Response: None.

Problem Determination: Table I, items 1, 2, 3, 4, 13, 20, and 29.

ADR336I (xxx)-mmmmm(yy), LOGICAL ERROR WHILE READING VOLUME volser, TRACK cchh, CCW {5E | DE}

Explanation: An unexpected error was encountered during a read operation that used the Read Multiple Count, Key, and Data (X'5E') channel command or the Read Track (X'DE') channel command. Normally, you need not take any action; however, see "Programmer Response."

System Action: The track is reread using other channel commands.

Programmer Response: If you get this message too many times in a job, then either the DASD ERP program that retries a temporary data check may be in error or DFDSS may be in error.

Operator Response: None.

Problem Determination: Table I, items 35, 5, and 29.

VM/SP and VM/SP HPO Messages and Codes

The following describes the new and modified VM messages provided to support the 3990.

DMKDAD099I DEVICE rdev ENVIRONMENTAL DATA RETRY COUNT EXCEEDED

Explanation: More than 255 retries of CP or Diagnose I/O resulted in the generation of sense data with environmental data present.

rdev address of the device used to report the error.

System Action: System operation continues.

Operator Response: Follow your installation's procedure for reporting this error.

DMKVER297I rdev {CONTROLLER|SCU|CHANNEL} SOFTWARE WRITE INHIBIT REQUESTED

Explanation: This message will be issued if guest systems request logging of OBR records and the sense data indicates that write inhibit has been requested.

rdev address of the device used to report the error.

System Action: System operation continues.

Operator Response: Follow your installation's procedures for reporting this error.

DMKmod402I rdev SENSE DATA LOGGED FOR {DEVICE|CONTROLLER}

Explanation: If issued by DMKDAD, sense data has been received indicating soft error logging exit in response to CP-initiated or Diagnose I/O.

If issued by DMKVER, a guest has requested logging of sense data indicating soft error logging exit.

mod module issuing the message, specifically DAD or VER.

rdev address of the device used to report the error.

System Action: System operation continues.

Operator Response: Follow your installation's procedure for reporting this error.

DMKmod403I rdev SCU {SERVICE|MODERATE|SERIOUS|ACUTE} ALERT, MT = mt SER = ser REFCODE = refcode

Explanation: If issued by DMKDAD, SIM has been received in response to CP or Diagnose I/O. If issued by DMKVER, a guest system requested CP to log an Alert Record to the error recording data set.

mod module issuing the message, specifically DAD or VER.

rdev address of unit that reported the SIM message.

mt machine type that caused the SIM message.

ser serial number of the failing component.

refcode error reference code.

System Action: System operation continues.

Operator Response: The system issues this message to indicate that service attention is required. Follow your installation's procedures for obtaining service.

DMKVER564I rdev PERMANENT PATH ERROR, RECOVERED ON ALTERNATE PATH

Explanation: The device has been accessed via an alternate path due to a permanent path error.

rdev address of the device used to report the error.

System Action: System operation continues.

Operator Response: Follow your installation's procedure for reporting this error.

DMKmod565I DASD rdev VOLUME volid IS FENCED FROM A STORAGE PATH - ssid.p-cc-dd

Explanation: A path to a device has become non-operational.

mod module issuing the message, specifically DAD or VER

rdev address of device reporting the error

volid volume serial number of the volume

ssid subsystem identifier

p storage path

cc controller id/string id

dd device number

System Action: System operation continues.

Operator Response: The system issues this message because of a hardware error. Follow your installation's procedures for reporting and correcting this error. After the hardware error has been repaired, the path needs to be unfenced. To unfence the storage path run ICKDSF with the CONTROL command with the CLEARFENCE parameter. The following example shows the control command used to reset a fence status. It is assumed the path and/or device which has been fenced off by the subsystem has been repaired.

DMKmod566I DASD rdev A CONTROLLER OF A STORAGE PATH IS NOT OPERATIONAL - ssid.p-cc-dd

Explanation: A controller has become non-operational.

mod module issuing the message, specifically DAD or VER

rdev address of device reporting the error

ssid subsystem identifier

p storage path

cc controller id/string id

dd device number

System Action: System operation continues.

Operator Response: The system issues this message because of a hardware error. Follow your installation's procedures for reporting this error.

HCPERP403I rdev SCU "ACUTE|SERIOUS|MODERATE|SERVICE" ALERT, MT = mt, SER = ser, REFCODE = refcode

Explanation: HCPERP403I is a Service Information Message (SIM) Alert console message. The storage director has detected an abnormal condition that requires service attention. ACUTE|SERIOUS|MODERATE|SERVICE indicate the severity of the SIM Alert message. ACUTE is the most severe and SERVICE is the least severe. An explanation of each of the fields in the message text follows:

rdev Address of device reporting the error.

mt Machine type that caused the SIM message.

ser Serial number of unit referenced by the SIM message.

refcode An error reference code.

System Action: The system logs an alert record in ERDS and continues processing.

Operator Response: The system issues this message to indicate that service attention is required. Follow your installation's procedures for obtaining service.

HCPERP6308I AN ENVIRONMENTAL DATA PRESENT CONDITION OCCURRED SENSE DATA LOGGED FOR THE DEVICE

HCPERP6308I AN ENVIRONMENTAL DATA PRESENT CONDITION OCCURRED SENSE DATA LOGGED FOR THE CONTROLLER

HCPERP2226I VOLUME volser IS FENCED FROM A STORAGE PATH

HCPERP2227I A CONTROLLER OF A STORAGE PATH IS NOT OPERATIONAL

VSE Messages and Codes

The following headings describe the modified VSE messages provided to support the 3990 for the stated conditions. I/O-specific information (CCB and CCSW) is not meaningful for these conditions, and is not even available when these conditions occur on system-task-initiated I/O.

0P04I PATH FENCE

Message 0P04I is displayed if a path to a device or a DASD controller becomes not operational.

0P05I OPER INFO

Message 0P05I is displayed when:

- Sense byte 1 bit 3 is on (message to operator)
- Sense byte 7 indicates:
  - SIM condition (X'E0') and the SIM message code in sense byte 28 contains a code other than X'F1'or X'F2'.
  - Sense byte 7 contains a code other than X'E0'.

0P64I MAINT REQ

Message 0P64I is displayed when:

- Sense byte 1 bit 3 is on (message to operator)
- Sense byte 7 indicates a SIM condition (X'E0')
- SIM message code in sense byte 28 contains one of the following:
  - X'F1' - Storage control unit service alert
  - X'F2' - Cache service alert.

0P60I PATH ERROR

Message 0P60I is forced by resident DASD ERP when a failing path is taken off-line. The sense information provided with the message will reflect the initial error.

Appendix E. Installation Planning Representative 3990 Configuration and Cable Planning Worksheets

Installation Planning Representatives: This appendix contains configuration worksheets that are intended to help you plan a 3990 installation. The worksheets provide a place to record the 3990 vital product data, host system attachment, and cabling information for the 3990 subsystem. We recommend that you make copies of the worksheets before you fill them in. Give the completed worksheets to the service representative for 3990 installation.

For dual-frame configurations, you will need two sets of the worksheets, one for each cluster pair. A cluster pair is frame 0, cluster 0 and frame 1, cluster 1. The other pair is frame 1, cluster 0 and frame 0, cluster 1.

Introducing the 3990 Configuration and Cable Planning Worksheets

The "3990 Channel Worksheets" on page 252 provide a place to record processor, channel, storage director control unit address, and channel interface cable information. One worksheet is required for each storage cluster. The 3990 Model 1 has one storage cluster; 3990 Model 2 and 3 have two storage clusters.

Choose the worksheet for your configuration and operating mode, copy the configuration information from the installation's Channel Interface Worksheet, and fill in the channel interface cabling information for the interfaces that will attach to the 3990.

The "3990 Subsystem Configuration Worksheets" on page 256 provide a place to record the subsystem configuration information that the installation specifies in the Vital Product Data (VPD) Worksheets. The worksheet also provides a place to record the control interface (CTL-I) cable information.

Choose the worksheet for your configuration and operating mode, copy the configuration information from the installation's Subsystem Configuration Worksheet, and fill in the CTL-I cabling information needed.

The "3990 Power Sequence Control Cable Worksheets" on page 275 provide a place to record the power sequence control cable information for the 3990 subsystem. Choose the worksheet that matches the subsystem configuration and operating mode and fill in the power sequence control cable information needed for your installation.

How to Select the Worksheets for the Subsystem You Are Installing

1. Identify the subsystem you are installing from the **3990 Model** and **Subsystem Configuration and Mode** columns in Figure 87.
2. In the **3990 Subsystem Configuration and Mode** column, when 2-path strings are intermixed with a 4-path string, the 4-path string can be the first or the second string on the control interface. The order of listing the strings in the table identifies their relative position on the control interface.
3. The worksheet pages you need are identified in the three columns to the right of your subsystem configuration and mode. These columns show the pages where you can find the channel, subsystem configuration, and power sequence control worksheets for your subsystem.
4. Select the worksheet pages from the next three columns. These three columns show the pages where you can find the channel, subsystem configuration, and power sequence control worksheets for your subsystem.

3990 Model	3990 Subsystem Configuration and Mode	Channel Configuration Worksheet Page Number	Subsystem Configuration Worksheet Page Number	Power Sequence Worksheet Page Number
3990 Model 1	DLS	252	256	275
3990 Model 2 or 3	DLSE	254 and 255	257	276
3990 Model 2 or 3	DLS	252 and 253	258	277
3990 Model 2 or 3	DLSE with intermixed 2-path and 4-path DASD strings 4-path and 2-path DASD strings	 254 and 255 254 and 255	 259 260	 278 279
3990 Model 2 or 3	Dual-Frame DLSE	254 and 255	261	280
3990 Model 2 or 3	Dual-Frame DLS	252 and 253	262	281
3990 Model 2 or 3	Dual-Frame DLSE with intermixed 2-path and 4-path DASD strings 4-path and 2-path DASD strings	 254 and 255 254 and 255	 263 264	 282 283
3990 Model 2 or 3	Dual-Frame DLS and DLSE	252 thru 255	265	284
3990 Model 2 or 3	Dual-Frame DLSE and DLS	252 thru 255	266	285

Figure 87 (Part 1 of 2). Cross-Reference List to the IPR 3990 Configuration and Cable Planning Worksheets

3990 Model	3990 Subsystem Configuration and Mode	Channel Configuration Worksheet Page Number	Subsystem Configuration Worksheet Page Number	Power Sequence Worksheet Page Number
3990 Model 2	Dual-Frame DLS and DLSE with intermixed 2-path and 4-path DASD strings	252 thru 255	267	286
or 3	4-path and 2-path DASD strings	252 thru 255	268	287
3990 Model 2	Dual-Frame DLSE with intermixed and DLS 2-path and 4-path DASD strings and DLS	252 thru 255	269	288
or 3	4-path and 2-path DASD strings and DLS	252 thru 255	270	289
3990 Model 2	Dual-Frame DLSE with intermixed 2-path and 4-path DASD strings and DLSE	254 and 255	271	290
or 3	4-path and 2-path DASD strings and DLSE	254 and 255	272	291
3990 Model 2	Dual-Frame DLSE Mode and DLSE Mode with intermixed 2-path and 4-path DASD strings	254 and 255	273	292
or 3	4-path and 2-path DASD strings	254 and 255	274	293

Figure 87 (Part 2 of 2). Cross-Reference List to the IPR 3990 Configuration and Cable Planning Worksheets

3990 Channel Worksheets

3990 Channel Worksheet—Storage Cluster 0 (DLS Mode) Frame _____

Installation Supplied Information (Channels A-D)

CPU ID _____	CPU ID _____	CPU ID _____	CPU ID _____
CHAN _____	CHAN _____	CHAN _____	CHAN _____
SD 0 CUA _____	SD 0 CUA _____	SD 0 CUA _____	SD 0 CUA _____
SD 1 CUA _____	SD 1 CUA _____	SD 1 CUA _____	SD 1 CUA _____

IPR Supplied Information

From _____ To _____		From _____ To _____		From _____ To _____		From _____ To _____	
K _____ K _____		K _____ K _____		K _____ K _____		K _____ K _____	
L _____ L _____		L _____ L _____		L _____ L _____		L _____ L _____	
Bus Tag	Bus Tag	Bus Tag	Bus Tag	Bus Tag	Bus Tag	Bus Tag	Bus Tag
In	Out	In	Out	In	Out	In	Out
Channel A		Channel B		Channel C		Channel D	

Installation Supplied Information (Channels E-H)

CPU ID _____	CPU ID _____	CPU ID _____	CPU ID _____
CHAN _____	CHAN _____	CHAN _____	CHAN _____
SD 0 CUA _____	SD 0 CUA _____	SD 0 CUA _____	SD 0 CUA _____
SD 1 CUA _____	SD 1 CUA _____	SD 1 CUA _____	SD 1 CUA _____

IPR Supplied Information

From _____ To _____		From _____ To _____		From _____ To _____		From _____ To _____	
K _____ K _____		K _____ K _____		K _____ K _____		K _____ K _____	
L _____ L _____		L _____ L _____		L _____ L _____		L _____ L _____	
Bus Tag	Bus Tag	Bus Tag	Bus Tag	Bus Tag	Bus Tag	Bus Tag	Bus Tag
In	Out	In	Out	In	Out	In	Out
Channel E		Channel F		Channel G		Channel H	

slvk0ih1

Legend

CHAN = Channel Number or ID
CUA = Control Unit Address
SD = Storage Director
L = Length
K = Key

Notes:
1. In DLS mode, if a channel (A-H) is set to access both storage directors in a cluster, each storage director must use a different address range.
2. In a 3990 Model 1, each channel can attach to one and only one storage director. You must enter X'FF' on the storage director control unit address for each channel that is not assigned to the storage director.

3990 Channel Worksheet—Storage Cluster 1 (DLS Mode) Frame _____

Installation Supplied Information (Channels A-D)

CPU ID _____	CPU ID _____	CPU ID _____	CPU ID _____
CHAN _____	CHAN _____	CHAN _____	CHAN _____
SD 2 CUA _____	SD 2 CUA _____	SD 2 CUA _____	SD 2 CUA _____
SD 3 CUA _____	SD 3 CUA _____	SD 3 CUA _____	SD 3 CUA _____

IPR Supplied Information

From _____	To _____	From _____	To _____	From _____	To _____	From _____	To _____
K _____	K _____	K _____	K _____	K _____	K _____	K _____	K _____
L _____	L _____	L _____	L _____	L _____	L _____	L _____	L _____
Bus | Tag	Bus | Tag	Bus | Tag	Bus | Tag	Bus | Tag	Bus | Tag	Bus | Tag	Bus | Tag
In	Out	In	Out	In	Out	In	Out
Channel A		Channel B		Channel C		Channel D	

Installation Supplied Information (Channels E-H)

CPU ID _____	CPU ID _____	CPU ID _____	CPU ID _____
CHAN _____	CHAN _____	CHAN _____	CHAN _____
SD 2 CUA _____	SD 2 CUA _____	SD 2 CUA _____	SD 2 CUA _____
SD 3 CUA _____	SD 3 CUA _____	SD 3 CUA _____	SD 3 CUA _____

IPR Supplied Information

From _____	To _____	From _____	To _____	From _____	To _____	From _____	To _____
K _____	K _____	K _____	K _____	K _____	K _____	K _____	K _____
L _____	L _____	L _____	L _____	L _____	L _____	L _____	L _____
Bus | Tag	Bus | Tag	Bus | Tag	Bus | Tag	Bus | Tag	Bus | Tag	Bus | Tag	Bus | Tag
In	Out	In	Out	In	Out	In	Out
Channel E		Channel F		Channel G		Channel H	

GLVK0IH2

Legend

CHAN = Channel Number or ID
CUA = Control Unit Address
SD = Storage Director
L = Length
K = Key

Notes:

1. In DLS mode, if a channel (A-H) is set to access both storage directors in a cluster, each storage director must use a different address range.
2. In a 3990 Model 1, each channel can attach to one and only one storage director. You must enter X'FF' on the storage director control unit address for each channel that is not assigned to the storage director.

3990 Channel Worksheet—Storage Cluster 0 (DLSE Mode) Frame _____

Installation Supplied Information (Channels A-D)

CPU ID _____	CPU ID _____	CPU ID _____	CPU ID _____
CHAN _____	CHAN _____	CHAN _____	CHAN _____
SD 0 CUA _____	SD 0 CUA _____	SD 0 CUA _____	SD 0 CUA _____

IPR Supplied Information

From _____	To _____	From _____	To _____	From _____	To _____	From _____	To _____
K _____	K _____	K _____	K _____	K _____	K _____	K _____	K _____
L _____	L _____	L _____	L _____	L _____	L _____	L _____	L _____
Bus / Tag	Bus / Tag	Bus / Tag	Bus / Tag	Bus / Tag	Bus / Tag	Bus / Tag	Bus / Tag
In	Out	In	Out	In	Out	In	Out
Channel A		Channel B		Channel C		Channel D	

Installation Supplied Information (Channels E-H)

CPU ID _____	CPU ID _____	CPU ID _____	CPU ID _____
CHAN _____	CHAN _____	CHAN _____	CHAN _____
SD 0 CUA _____	SD 0 CUA _____	SD 0 CUA _____	SD 0 CUA _____

IPR Supplied Information

From _____	To _____	From _____	To _____	From _____	To _____	From _____	To _____
K _____	K _____	K _____	K _____	K _____	K _____	K _____	K _____
L _____	L _____	L _____	L _____	L _____	L _____	L _____	L _____
Bus / Tag	Bus / Tag	Bus / Tag	Bus / Tag	Bus / Tag	Bus / Tag	Bus / Tag	Bus / Tag
In	Out	In	Out	In	Out	In	Out
Channel E		Channel F		Channel G		Channel H	

Legend

CHAN = Channel Number or ID
CUA = Control Unit Address
SD = Storage Director
L = Length
K = Key

slvk0ih3

3990 Channel Worksheet—Storage Cluster 1 (DLSE Mode) Frame _____

Installation Supplied Information (Channels A-D)

CPU ID _____	CPU ID _____	CPU ID _____	CPU ID _____
CHAN _____	CHAN _____	CHAN _____	CHAN _____
SD 1 CUA _____	SD 1 CUA _____	SD 1 CUA _____	SD 1 CUA _____

IPR Supplied Information

From _____	To _____	From _____	To _____	From _____	To _____	From _____	To _____
K _____	K _____	K _____	K _____	K _____	K _____	K _____	K _____
L _____	L _____	L _____	L _____	L _____	L _____	L _____	L _____
Bus / Tag	Bus / Tag	Bus / Tag	Bus / Tag	Bus / Tag	Bus / Tag	Bus / Tag	Bus / Tag
In	Out	In	Out	In	Out	In	Out
Channel A		Channel B		Channel C		Channel D	

Installation Supplied Information (Channels E-H)

CPU ID _____	CPU ID _____	CPU ID _____	CPU ID _____
CHAN _____	CHAN _____	CHAN _____	CHAN _____
SD 1 CUA _____	SD 1 CUA _____	SD 1 CUA _____	SD 1 CUA _____

IPR Supplied Information

From _____	To _____	From _____	To _____	From _____	To _____	From _____	To _____
K _____	K _____	K _____	K _____	K _____	K _____	K _____	K _____
L _____	L _____	L _____	L _____	L _____	L _____	L _____	L _____
Bus / Tag	Bus / Tag	Bus / Tag	Bus / Tag	Bus / Tag	Bus / Tag	Bus / Tag	Bus / Tag
In	Out	In	Out	In	Out	In	Out
Channel E		Channel F		Channel G		Channel H	

Legend

CHAN = Channel Number or ID
CUA = Control Unit Address
SD = Storage Director
L = Length
K = Key

3990 Subsystem Configuration Worksheets

3990 Model 1 Subsystem Configuration Worksheet (DLS Mode)

SSID for the Subsystem Attached to SD 0, 1: _____
Number of Addressable Devices for the Subsystem Attached to SD 0, 1 (8, 16, or 32): _____

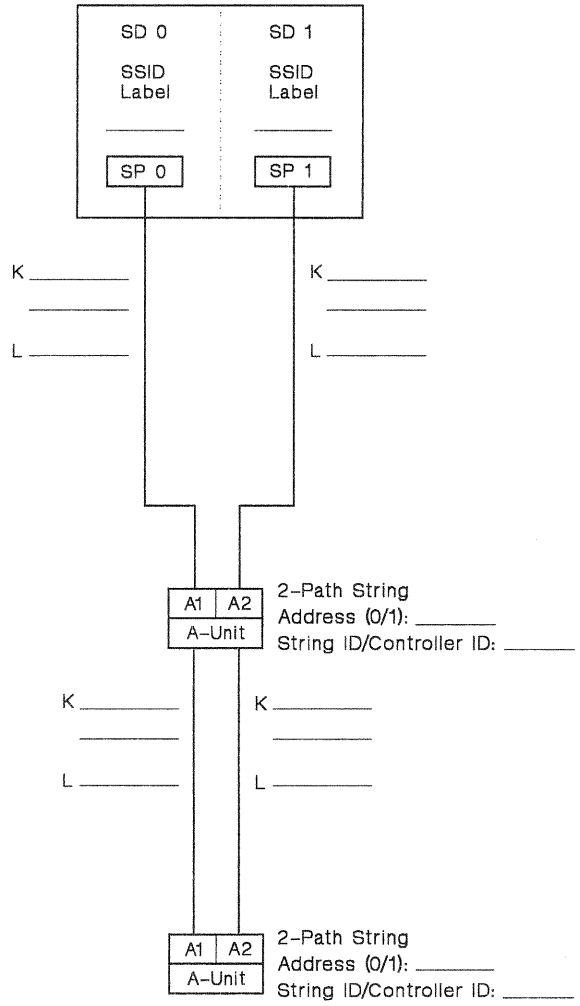

Legend

K = Key
L = Length
SD = Storage Director
SP = Storage Path
SSID = Subsystem Identifier

Note: The second DASD string is optional.

SLVK0101

3990 Model 2 or 3 Subsystem Configuration Worksheet (DLSE Mode)

SSID for the Subsystem Attached to SD 0, 1: _____
Number of Addressable Devices for the Subsystem Attached to SD 0, 1 (32 or 64): _____

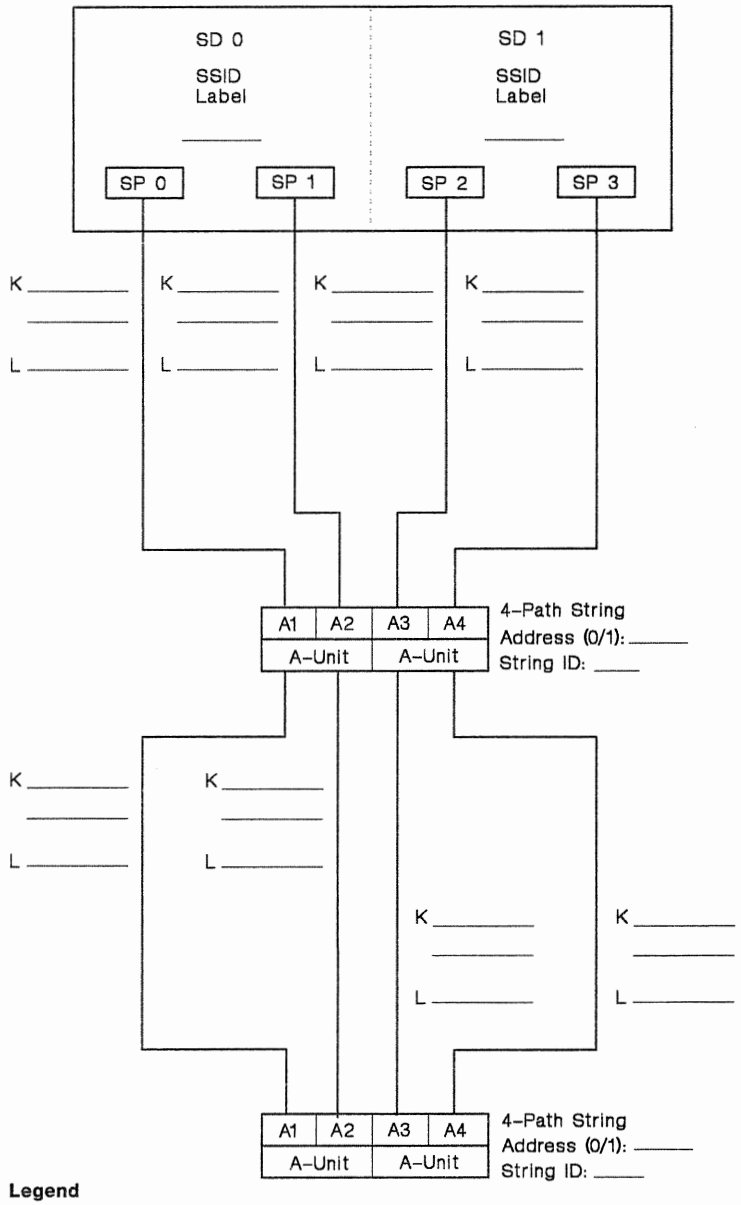

Legend

K = Key
L = Length

SD = Storage Director
SP = Storage Path
SSID = Subsystem Identifier

SLVK0102

Note: The second DASD string if optional.

3990 Model 2 or 3 Subsystem Configuration Worksheet (DLS Mode)

SSID for the Subsystem Attached to SD 0, 2: _____
SSID for the Subsystem Attached to SD 1, 3: _____
Number of Addressable Devices for the Subsystem Attached to SD 0, 2 (8, 16, or 32): _____
Number of Addressable Devices for the Subsystem Attached to SD 1, 3 (8, 16, or 32): _____

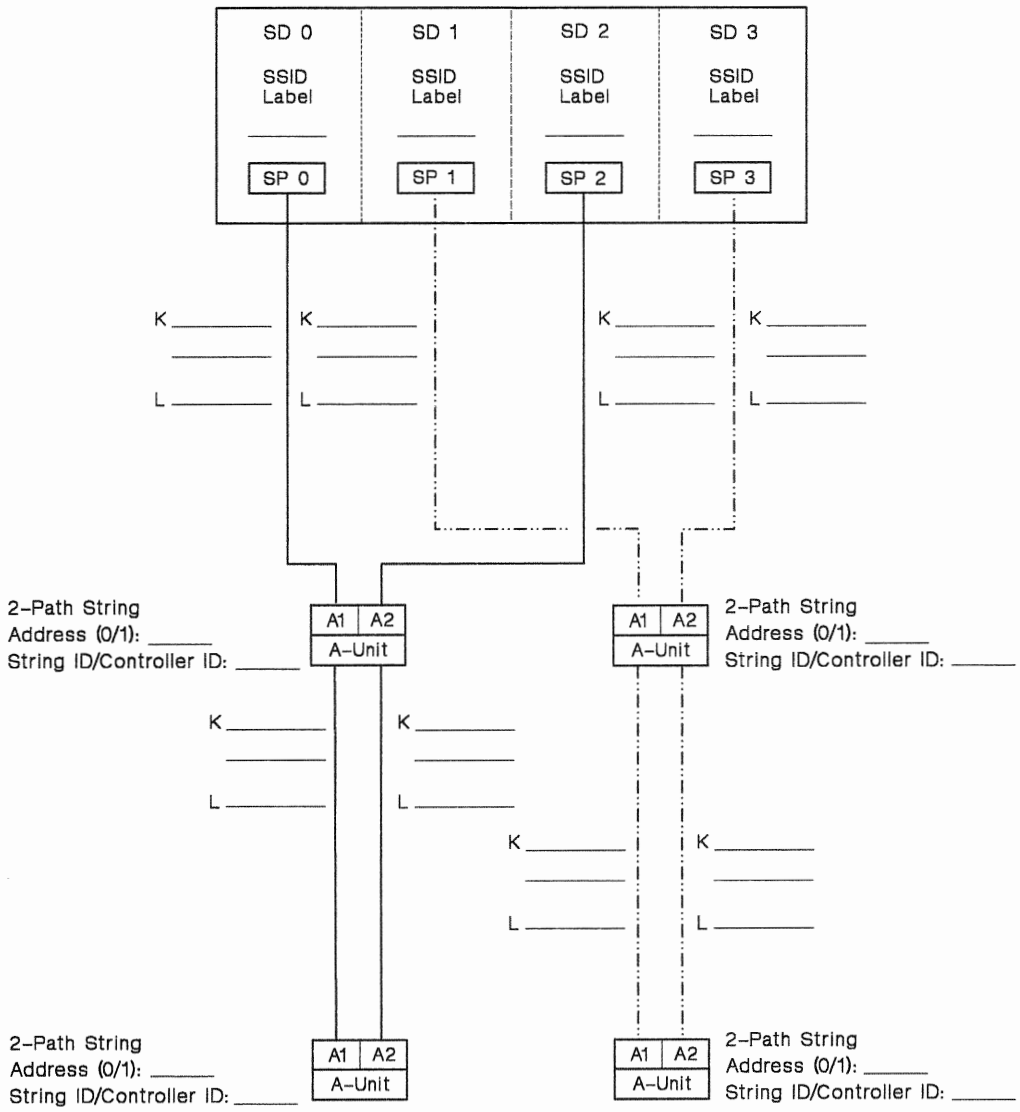

Legend

K = Key
L = Length
SD = Storage Director
SP = Storage Path
SSID = Subsystem Identifier

Note: The second DASD string in each subsystem is optional.

SLVK0103

3990 Model 2 or 3 Subsystem Configuration Worksheet (DLSE Mode With Intermixed 2-Path and 4-Path DASD Strings)

SSID for the Subsystem Attached to SD 0, 1: _____
Number of Addressable Devices for the Subsystem Attached to SD 0, 1 is 64

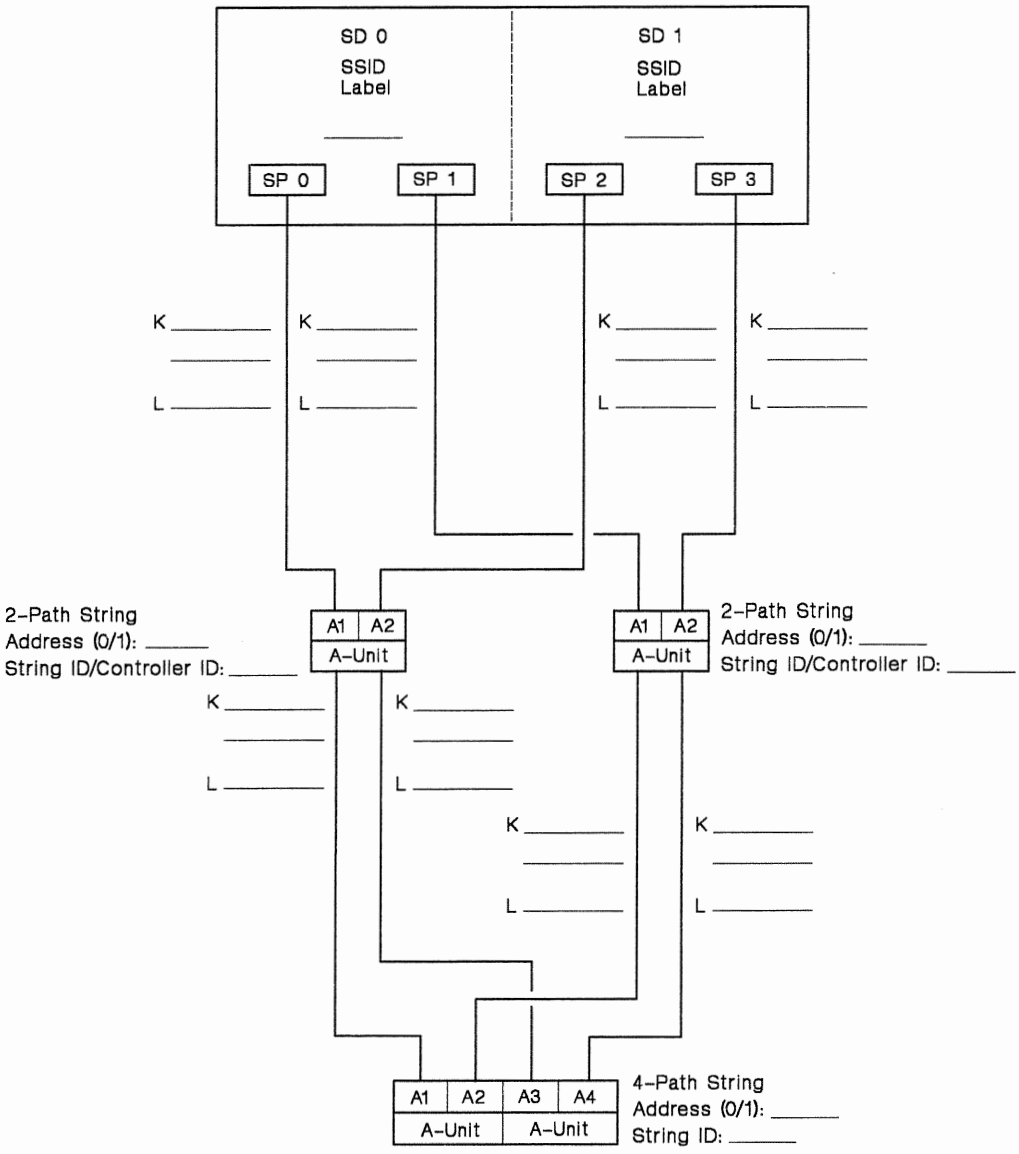

Legend

K = Key
L = Length
SD = Storage Director
SP = Storage Path
SSID = Subsystem Identifier

Note: One of the 2-path DASD strings is optional.

SLVK0104

3990 Model 2 or 3 Subsystem Configuration Worksheet (DLSE Mode With Intermixed 4-Path and 2-Path DASD Strings)

SSID for the Subsystem Attached to SD 0, 1: _____
Number of Addressable Devices for the Subsystem Attached to SD 0, 1 is 64

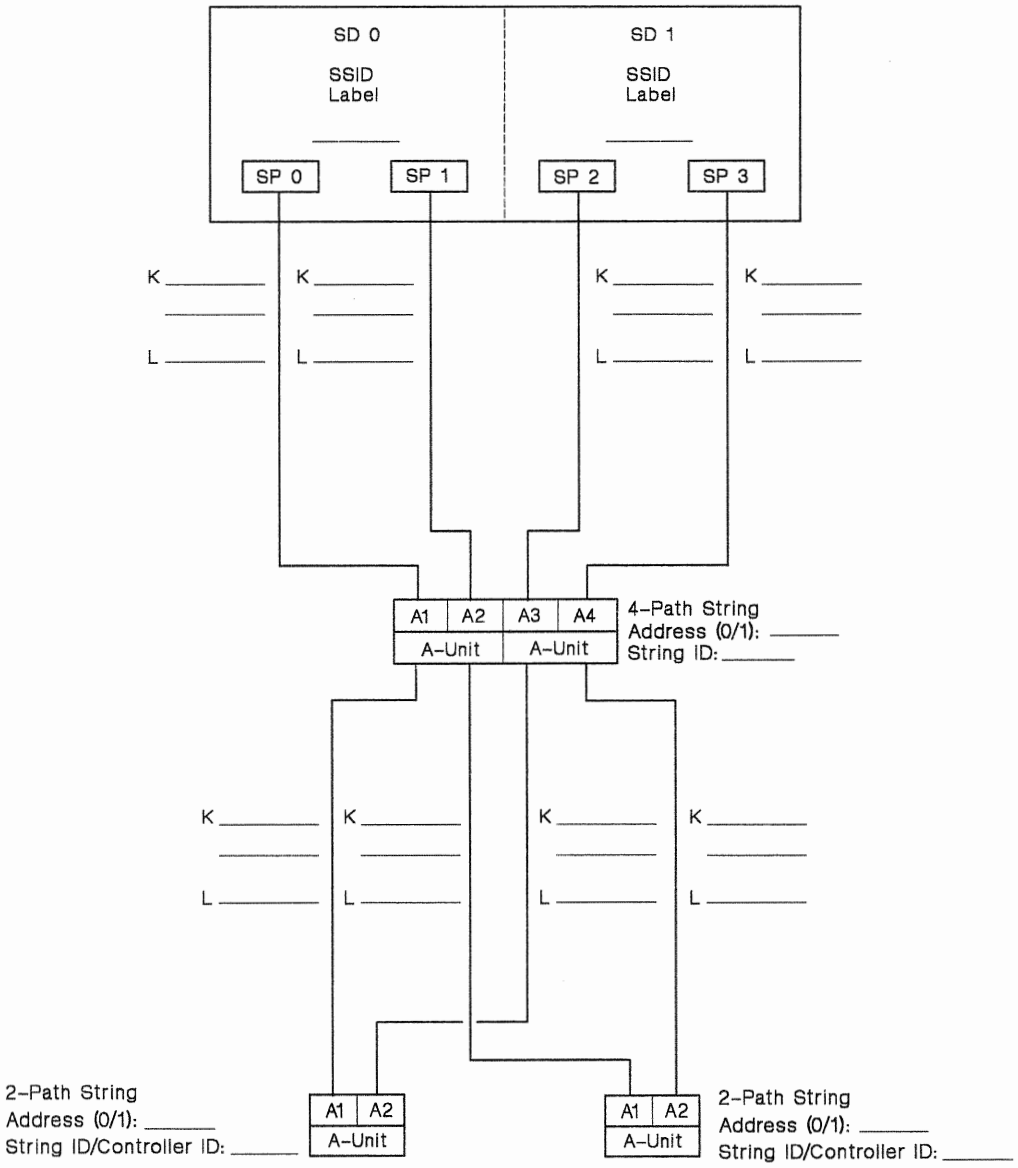

Legend

K = Key
L = Length
SD = Storage Director
SP = Storage Path
SSID = Subsystem Identifier

Note: One of the 2-path DASD strings is optional.

SLVK0105

Dual-Frame 3990 Model 2 or 3 Subsystem Configuration Worksheet (DLSE Mode)

SSID for the Subsystem Attached to:

Frame 0, SD 0 and Frame 1, SD 1: _____

Frame 0, SD 1 and Frame 1, SD 0: _____

Number of Addressable Devices for the Subsystem Attached to:

Frame 0, SD 0 and Frame 1, SD 1 (32 or 64): _____

Frame 0, SD 1 and Frame 1, SD 0 (32 or 64): _____

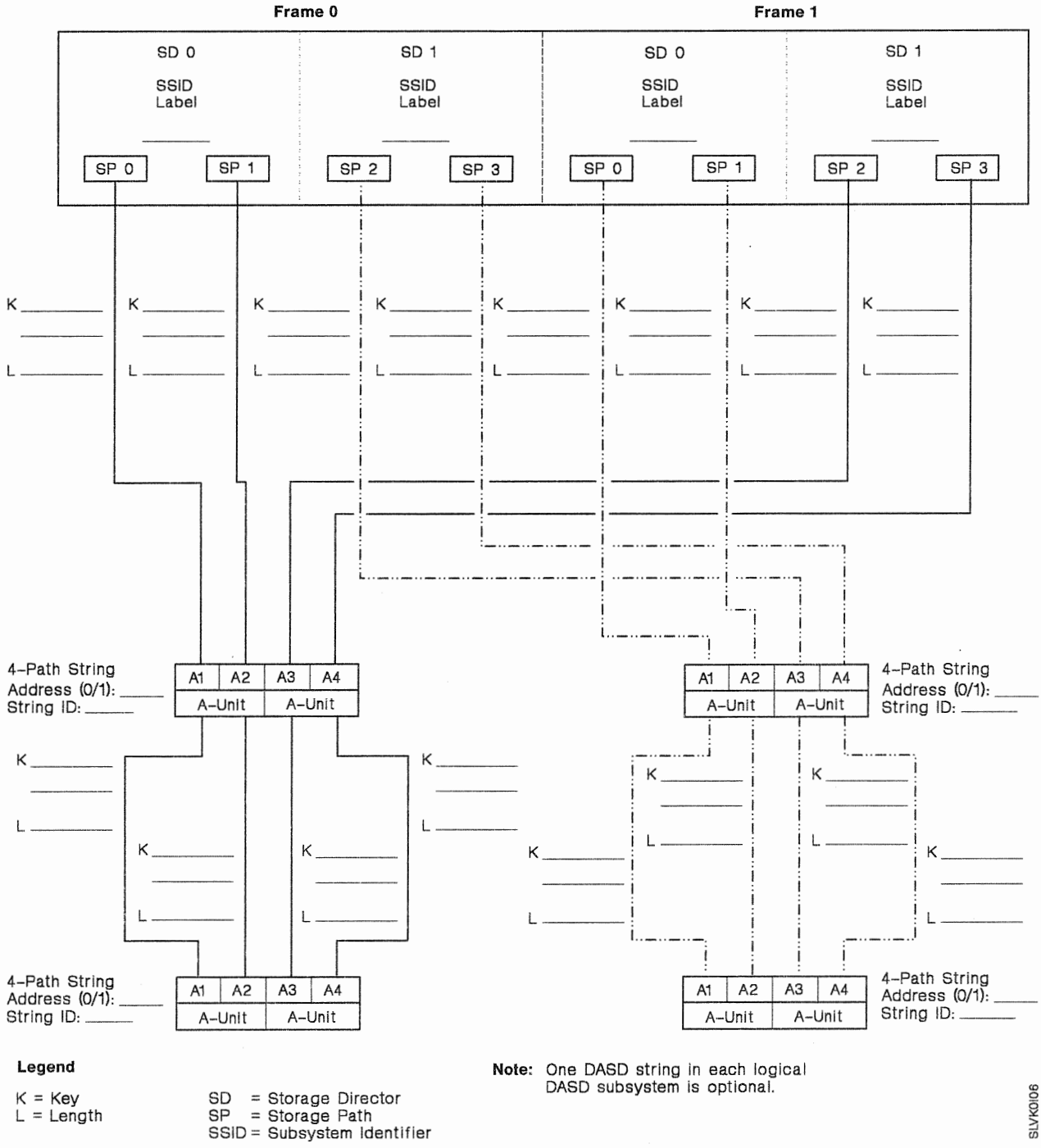

Legend

K = Key
L = Length

SD = Storage Director
SP = Storage Path
SSID = Subsystem Identifier

Note: One DASD string in each logical DASD subsystem is optional.

SLVK0106

Dual-Frame 3990 Model 2 or 3 Subsystem Configuration Worksheet (DLS Mode)

SSID for the Subsystem Attached to:

Frame 0, SD 0 and Frame 1, SD 2: _____

Frame 0, SD 1 and Frame 1, SD 3: _____

Frame 1, SD 0 and Frame 0, SD 2: _____

Frame 1, SD 1 and Frame 0, SD 3: _____

Number of Addressable Devices for the Subsystem Attached to:

Frame 0, SD 0 and Frame 1, SD 2 (8, 16, or 32): _____

Frame 0, SD 1 and Frame 1, SD 3 (8, 16, or 32): _____

Frame 1, SD 0 and Frame 0, SD 2 (8, 16, or 32): _____

Frame 1, SD 1 and Frame 0, SD 3 (8, 16, or 32): _____

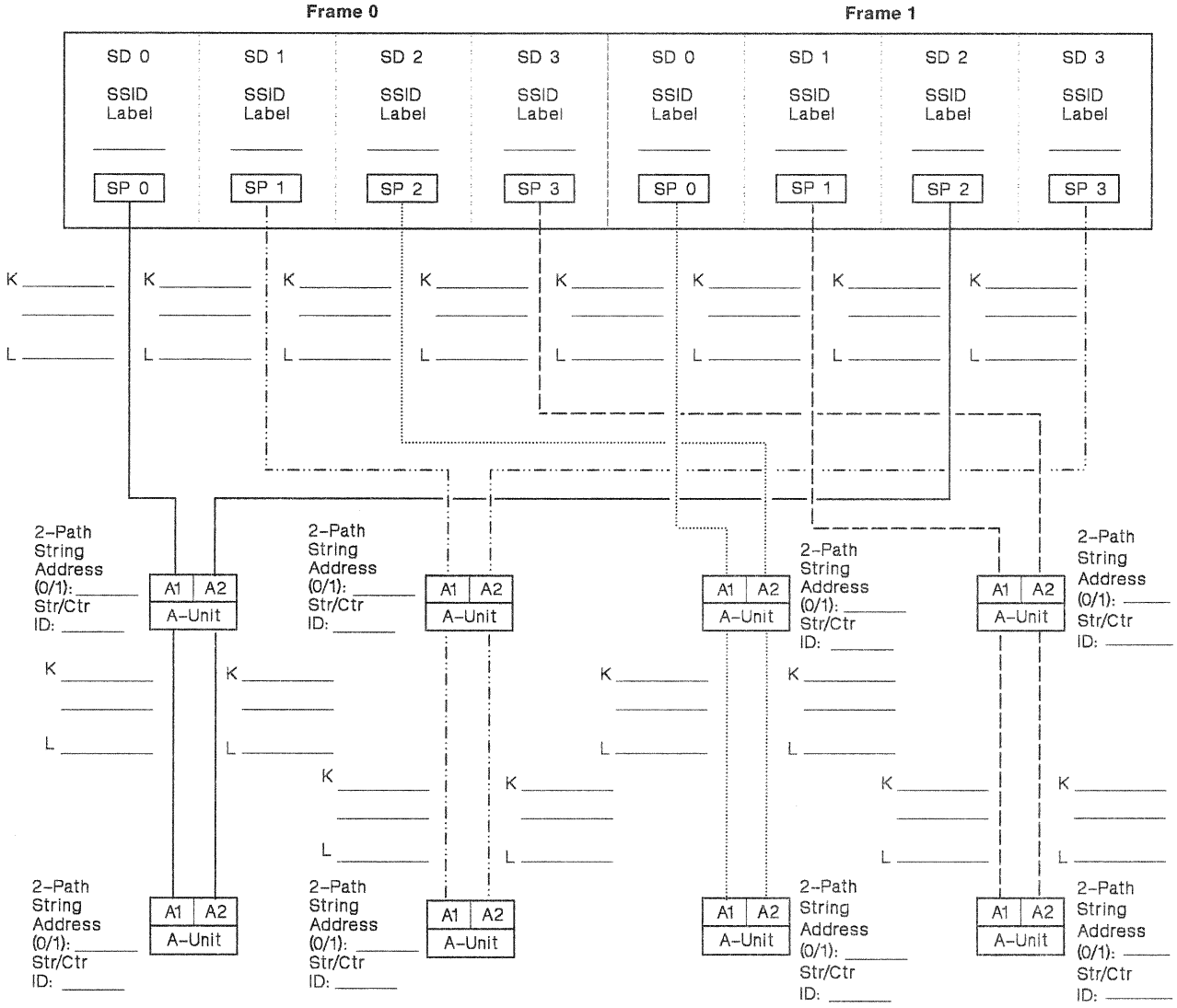

Legend

K = Key
L = Length
SD = Storage Path
SP = Storage Path
SSID = Subsystem Identifier
Stg/Ctr ID = String ID/Controller ID

Note: One DASD string in each logical DASD subsystem is optional.

SLVK0107

Dual-Frame 3990 Model 2 or 3 Subsystem Configuration Worksheet (DLSE Mode With Intermixed 2-Path and 4-Path DASD Strings)

SSID for the Subsystem Attached to:

Frame 0, SD 0 and Frame 1, SD 1:_____

Frame 0, SD 1 and Frame 1, SD 0:_____

Number of Addressable Devices for the Subsystem Attached to:

Frame 0, SD 0 and Frame 1, SD 1 is: 64

Frame 0, SD 1 and Frame 1, SD 0 is: 64

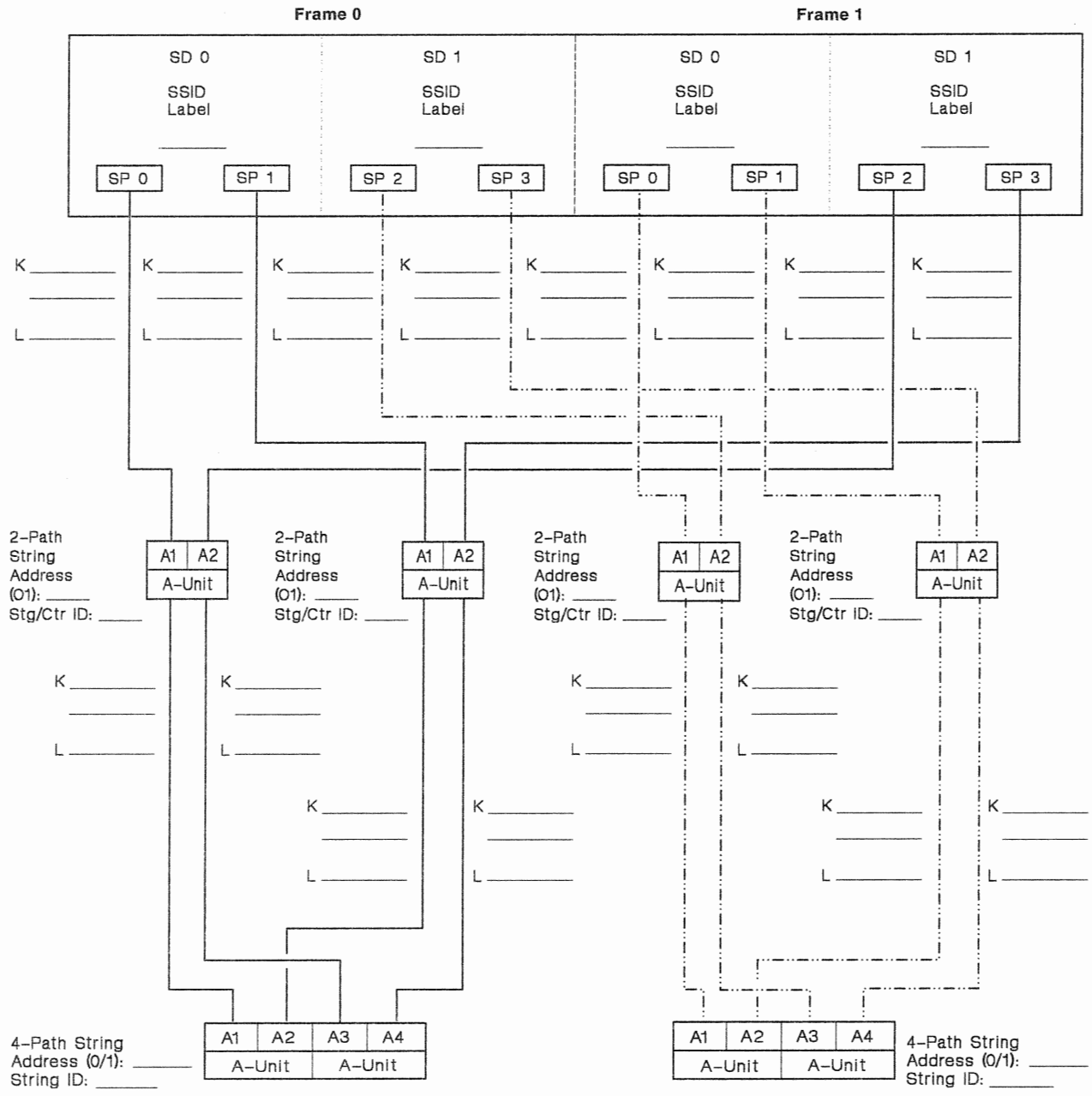

Legend

K = Key
L = Length
SD = Storage Path
SP = Storage Path
SSID = Subsystem Identifier
Stg/Ctr ID = String ID/Controller ID

Note: One 2-path DASD string in each logical DASD subsystem is optional.

SLVK0I08

Dual-Frame 3990 Model 2 or 3 Subsystem Configuration Worksheet (DLSE Mode With Intermixed 4-Path and 2-Path DASD Strings)

SSID for the Subsystem Attached to:

Frame 0, SD 0 and Frame 1, SD 1: _____
Frame 0, SD 1 and Frame 1, SD 0: _____

Number of Addressable Devices for the Subsystem Attached to:

Frame 0, SD 0 and Frame 1, SD 1 is: 64
Frame 0, SD 1 and Frame 1, SD 0 is: 64

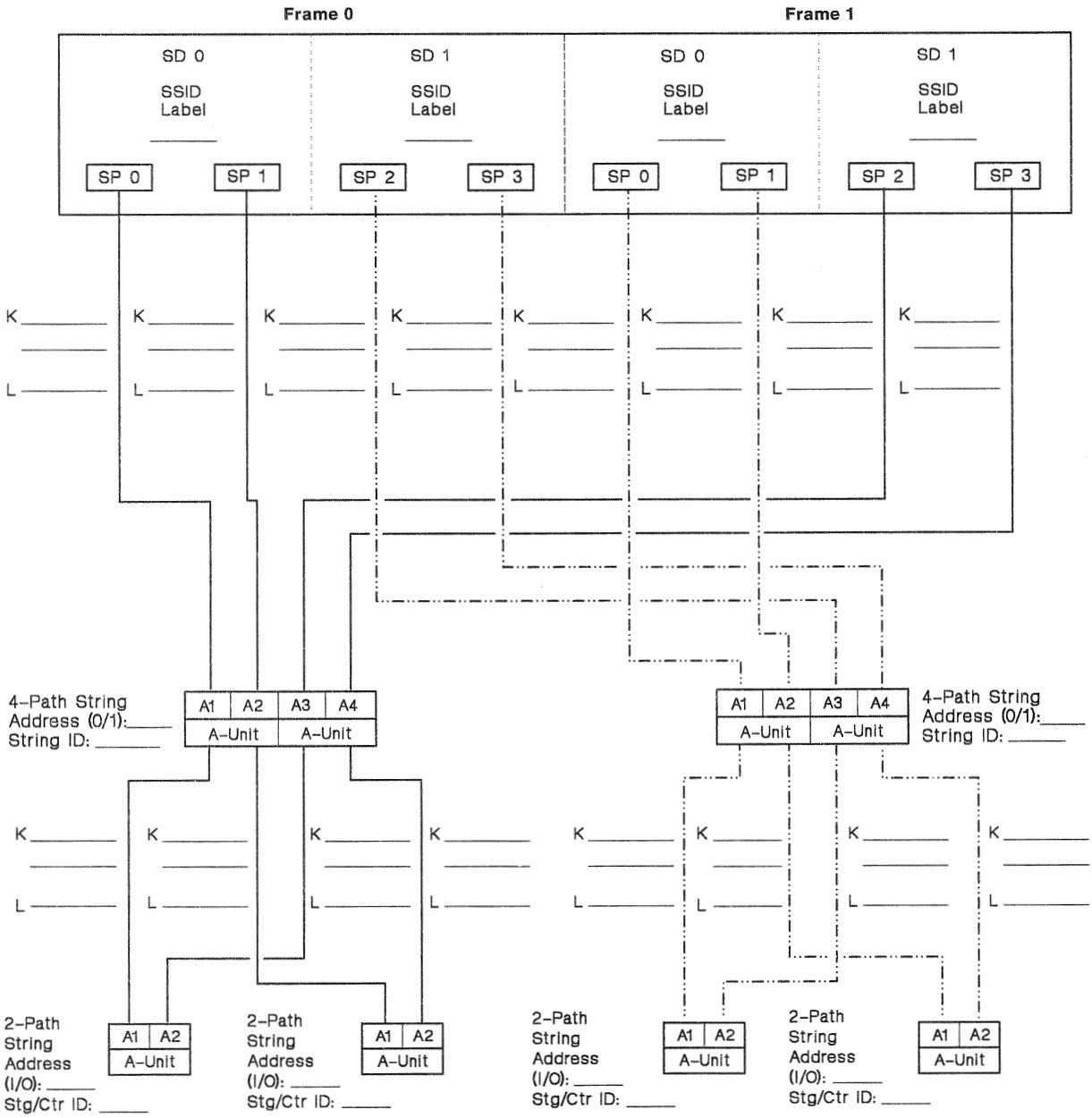

Legend

K = Key
L = Length
SD = Storage Path
SP = Storage Path
SSID = Subsystem Identifier
Stg/Ctr ID = String ID/Controller ID

Note: One 2-path DASD string in each logical DASD subsystem is optional.

SLVX009

Dual-Frame 3990 Model 2 or 3 Subsystem Configuration Worksheet (DLS and DLSE Mode)

SSID for the Subsystem Attached to:

Frame 0, SD 0 and Frame 0, SD 2: _____

Frame 0, SD 1 and Frame 1, SD 3: _____

Frame 1, SD 0 and Frame 0, SD 1: _____

Number of Addressable Devices for the Subsystem Attached to:

Frame 0, SD 0 and Frame 1, SD 2 (8, 16, or 32): _____

Frame 0, SD 1 and Frame 1, SD 3 (8, 16, or 32): _____

Frame 1, SD 0 and Frame 0, SD 1 (32 or 64): _____

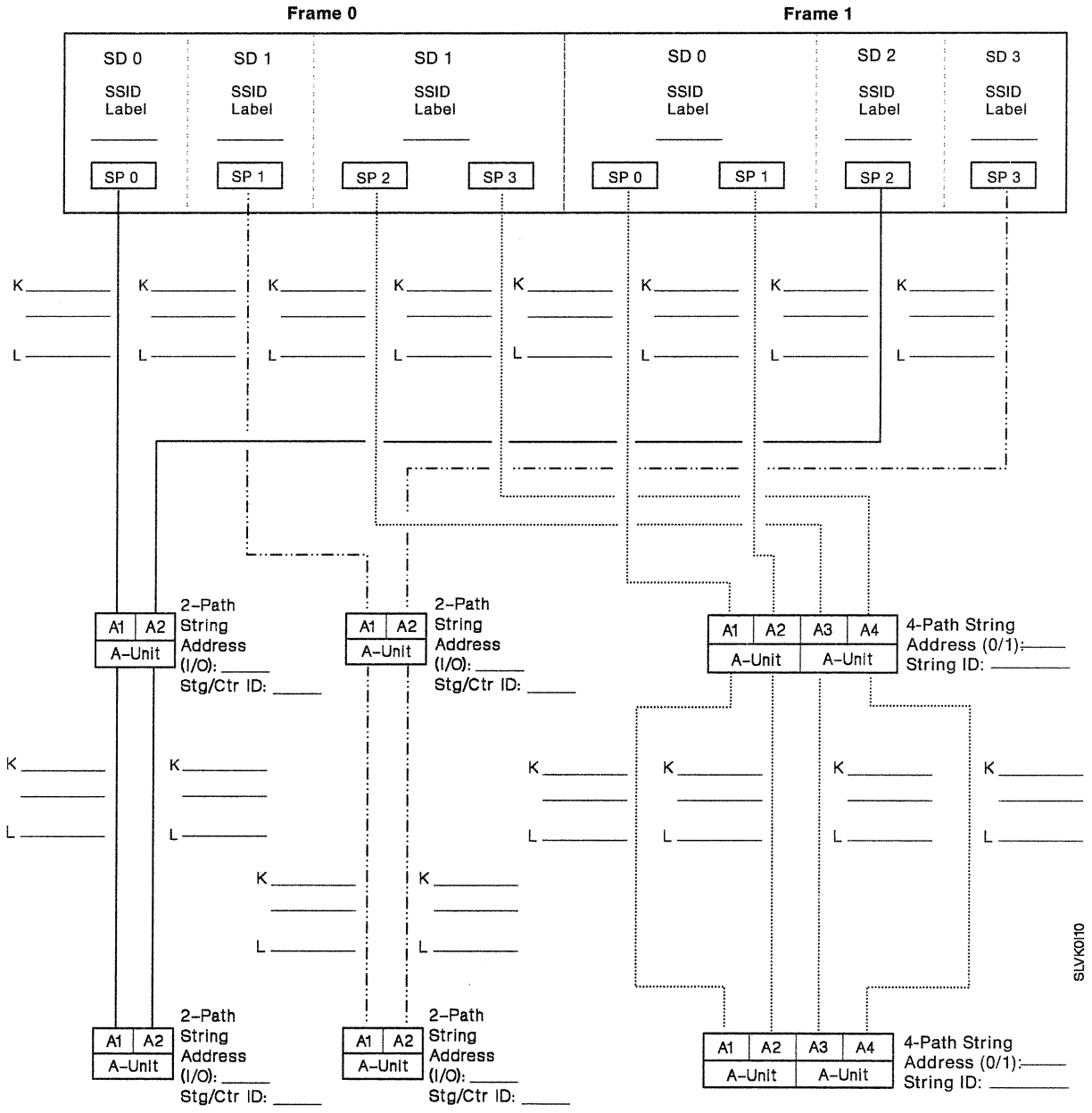

Legend

K = Key
L = Length
SD = Storage Path
SP = Storage Path
SSID = Subsystem Identifier
Stg/Ctr ID = String ID/Controller ID

Notes:

1. One 2-path DASD string in each DLS logical DASD subsystem is optional.
2. One 4-path DASD string in each DLSE logical DASD subsystem is optional.

Dual-Frame 3990 Model 2 or 3 Subsystem Configuration Worksheet (DLSE and DLS Mode)

SSID for the Subsystem Attached to:

Frame 0, SD 0 and Frame 1, SD 1:_____
Frame 1, SD 0 and Frame 0, SD 2:_____
Frame 1, SD 1 and Frame 0, SD 3:_____

Number of Addressable Devices for the Subsystem Attached to:

Frame 0, SD 0 and Frame 1, SD 1 (32 or 64): _____
Frame 1, SD 0 and Frame 0, SD 2 (8, 16, or 32):_____
Frame 1, SD 1 and Frame 0, SD 3 (8, 16, or 32): _____

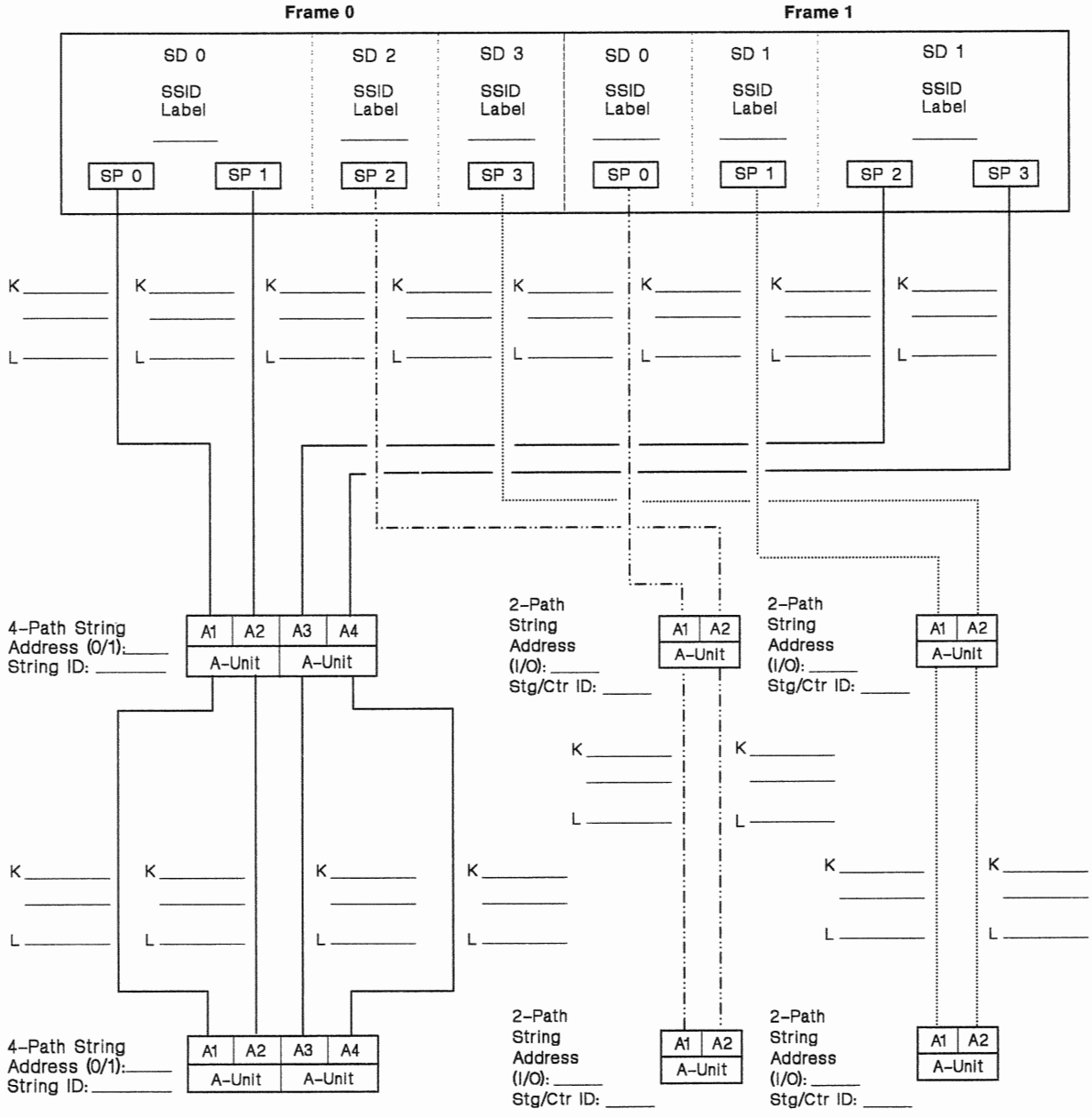

Legend

K = Key
L = Length
SD = Storage Path
SP = Storage Path
SSID = Subsystem Identifier
Stg/Ctr ID = String ID/Controller ID

Notes:

1. One 2-path DASD string in each DLS logical DASD subsystem is optional.
2. One 4-path DASD string in each DLSE logical DASD subsystem is optional.

SLVK0111

Dual-Frame 3990 Model 2 or 3 Subsystem Configuration Worksheet (DLS and DLSE Mode With Intermixed 2-Path and 4-Path DASD Strings)

SSID for the Subsystem Attached to:

Frame 0, SD 0 and Frame 1, SD 2:_____

Frame 0, SD 1 and Frame 1, SD 3:_____

Frame 1, SD 0 and Frame 0, SD 1:_____

Number of Addressable Devices for the Subsystem Attached to:

Frame 0, SD 0 and Frame 1, SD 2 (8, 16, or 32):_____

Frame 0, SD 1 and Frame 1, SD 3 (8, 16, or 32):_____

Frame 1, SD 0 and Frame 0, SD 1 is: 64

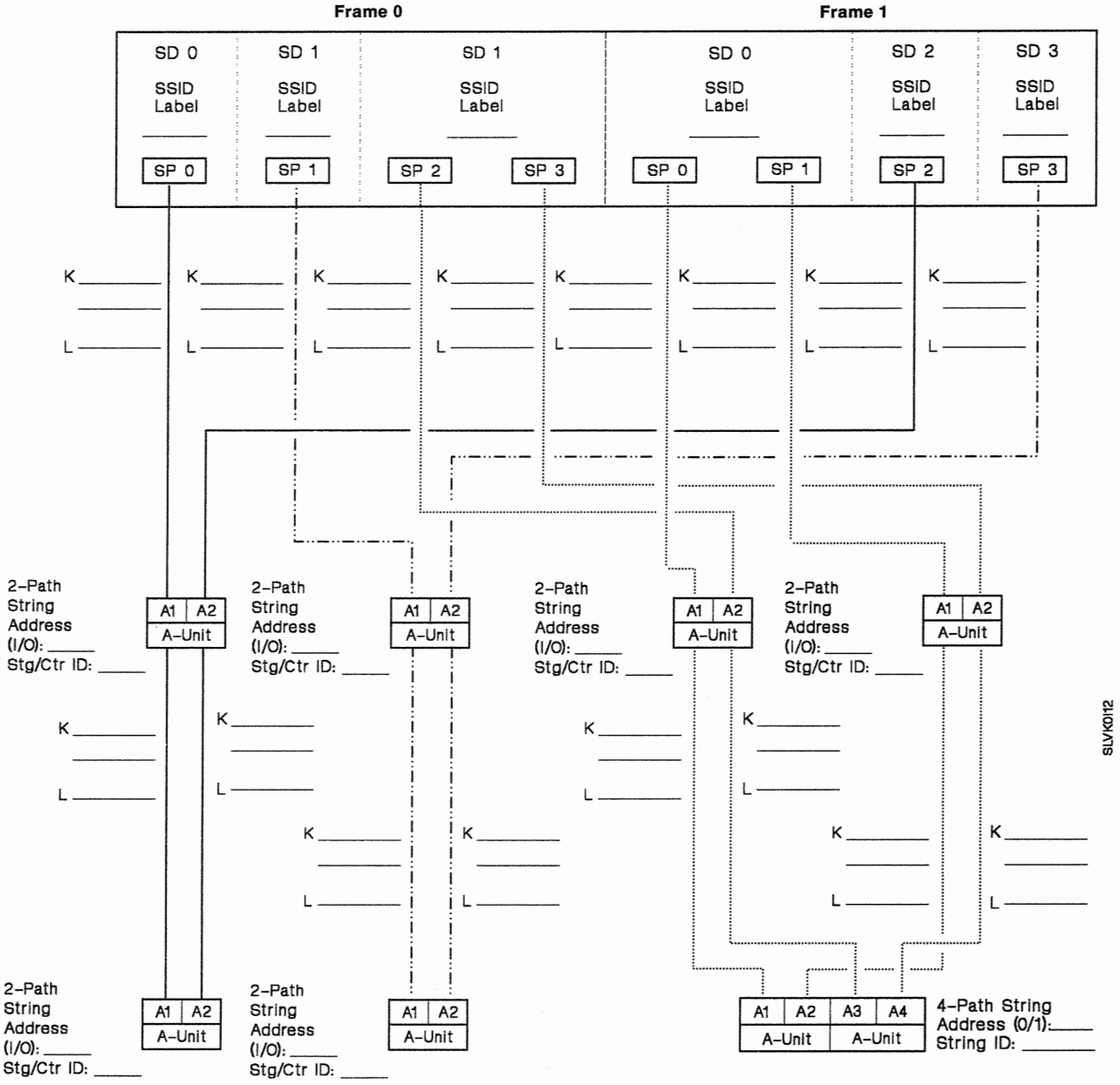

Legend

K = Key
L = Length
SD = Storage Path
SP = Storage Path
SSID = Subsystem Identifier
Stg/Ctr ID = String ID/Controller ID

Notes:

1. One 2-path DASD string in each DLS logical DASD subsystem is optional.
2. One of the 2-path DASD strings in the DLSE logical DASD subsystem is optional.

Dual-Frame 3990 Model 2 or 3 Subsystem Configuration (DLS and DLSE Mode With Intermixed 4-Path and 2-Path DASD Strings)

SSID for the Subsystem Attached to:

Frame 0, SD 0 and Frame 1, SD 2:_____
Frame 0, SD 1 and Frame 1, SD 3:_____
Frame 1, SD 0 and Frame 0, SD 1:_____

Number of Addressable Devices for the Subsystem Attached to:

Frame 0, SD 0 and Frame 1, SD 2 (8, 16, or 32): _____
Frame 0, SD 1 and Frame 1, SD 3 (8, 16, or 32): _____
Frame 1, SD 0 and Frame 0, SD 1 is: 64

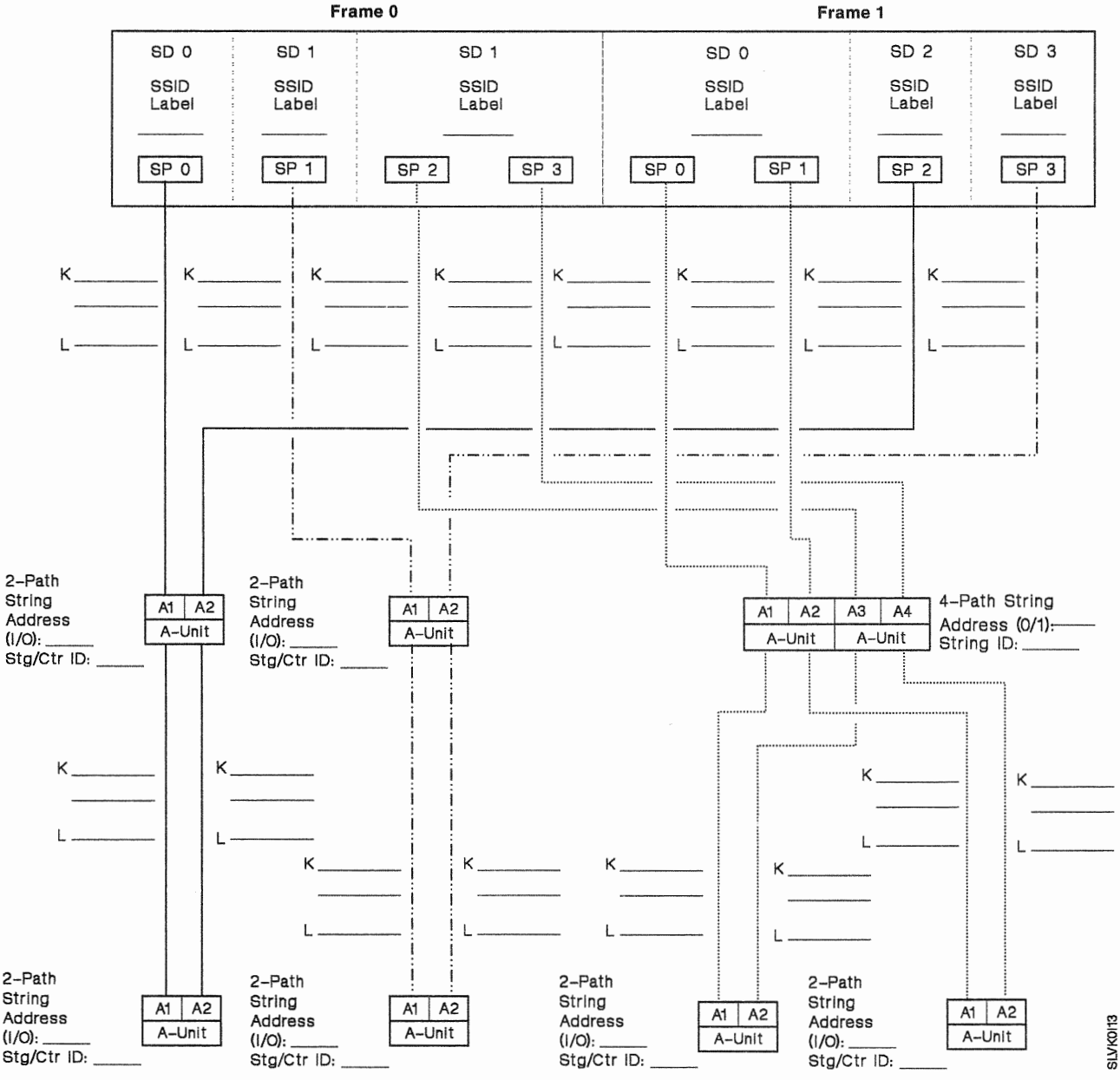

Legend

K = Key
L = Length
SD = Storage Path
SP = Storage Path
SSID = Subsystem Identifier
Stg/Ctr ID = String ID/Controller ID

Notes: 1. One 2-path DASD string in each DLS logical DASD subsystem is optional.

2. One of the 2-path DASD strings in the DLSE logical DASD subsystem is optional.

Dual-Frame 3990 Model 2 or 3 Subsystem Configuration (DLSE Mode With Intermixed 2-Path and 4-Path DASD Strings and DLS Mode)

SSID for the Subsystem Attached to:

Frame 0, SD 0 and Frame 1, SD 1: _____

Frame 1, SD 0 and Frame 0, SD 2: _____

Frame 1, SD 1 and Frame 0, SD 3: _____

Number of Addressable Devices for the Subsystem Attached to:

Frame 0, SD 0 and Frame 1, SD 1 is: 64

Frame 1, SD 0 and Frame 0, SD 2 (8, 16, or 32): _____

Frame 1, SD 1 and Frame 0, SD 3 (8, 16, or 32): _____

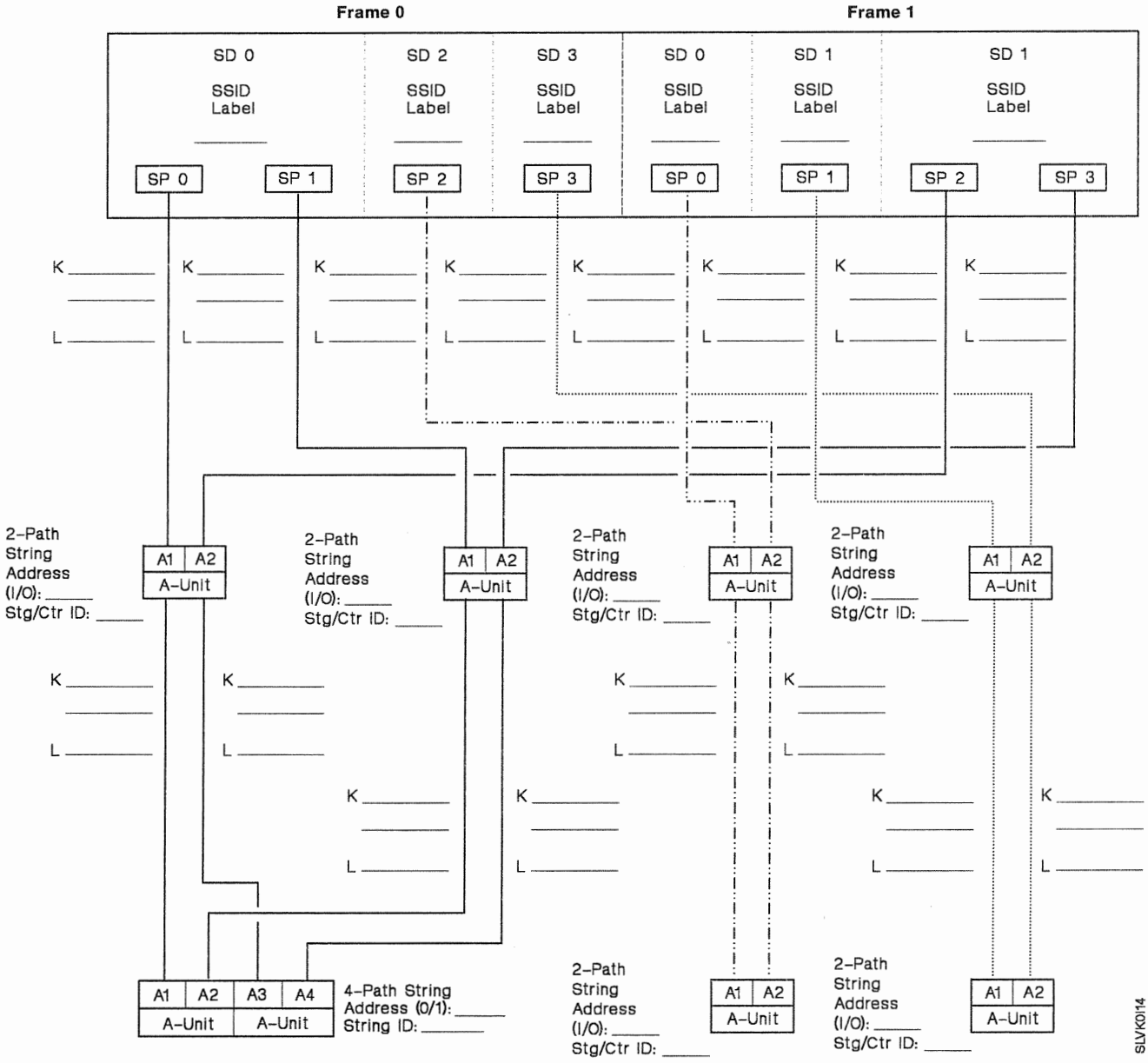

Legend

K = Key
L = Length
SD = Storage Path
SP = Storage Path
SSID = Subsystem Identifier
Stg/Ctr ID = String ID/Controller ID

Notes:

1. One 2-path DASD string in each DLS logical DASD subsystem is optional.
2. One of the 2-path DASD strings in the DLSE logical DASD subsystem is optional.

Dual-Frame 3990 Model 2 or 3 Subsystem Configuration (DLSE Mode With Intermixed 4-Path and 2-Path DASD Strings and DLS Mode)

SSID for the Subsystem Attached to:

Frame 0, SD 0 and Frame 1, SD 1: _____

Frame 1, SD 0 and Frame 0, SD 2: _____

Frame 1, SD 1 and Frame 0, SD 3: _____

Number of Addressable Devices for the Subsystem Attached to:

Frame 0, SD 0 and Frame 1, SD 1 is: 64

Frame 1, SD 0 and Frame 0, SD 2 (8, 16, or 32): _____

Frame 1, SD 1 and Frame 0, SD 3 (8, 16, or 32): _____

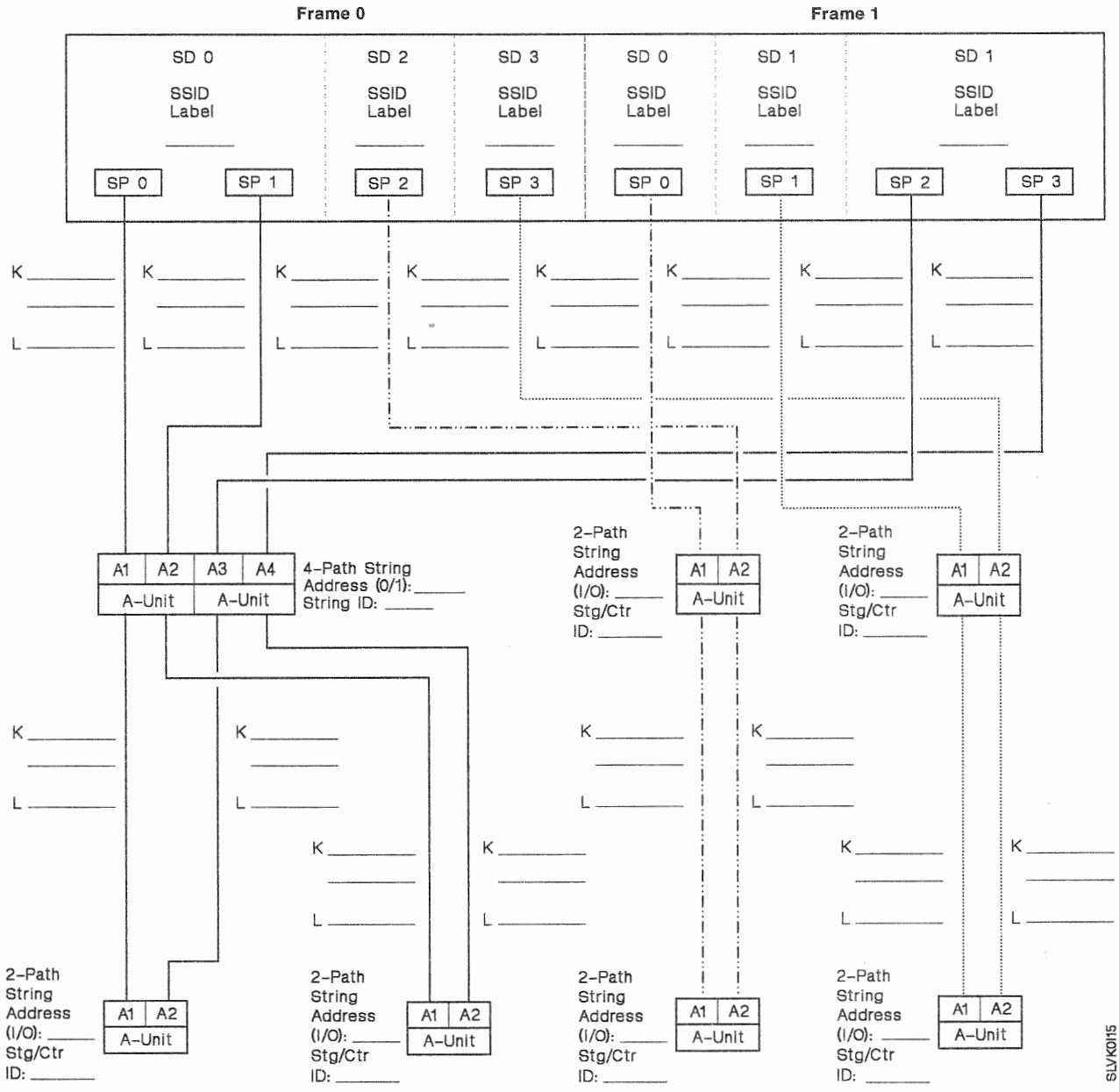

Legend

K = Key
L = Length
SD = Storage Path
SP = Storage Path
SSID = Subsystem Identifier
Stg/Ctr ID = String ID/Controller ID

Notes: 1. One 2-path DASD string in each DLS logical DASD subsystem is optional.

2. One of the 2-path DASD strings in the DLSE logical DASD subsystem is optional.

Dual-Frame 3990 Model 2 or 3 Subsystem Configuration (DLSE Mode With Intermixed 2-Path and 4-Path DASD Strings and DLSE Mode)

SSID for the Subsystem Attached to:

Frame 0, SD 0 and Frame 1, SD 1: _____

Frame 0, SD 1 and Frame 1, SD 0: _____

Number of Addressable Devices for the Subsystem Attached to:

Frame 0, SD 0 and Frame 1, SD 1 is: 64

Frame 0, SD 1 and Frame 1, SD 0 (32 or 64): _____

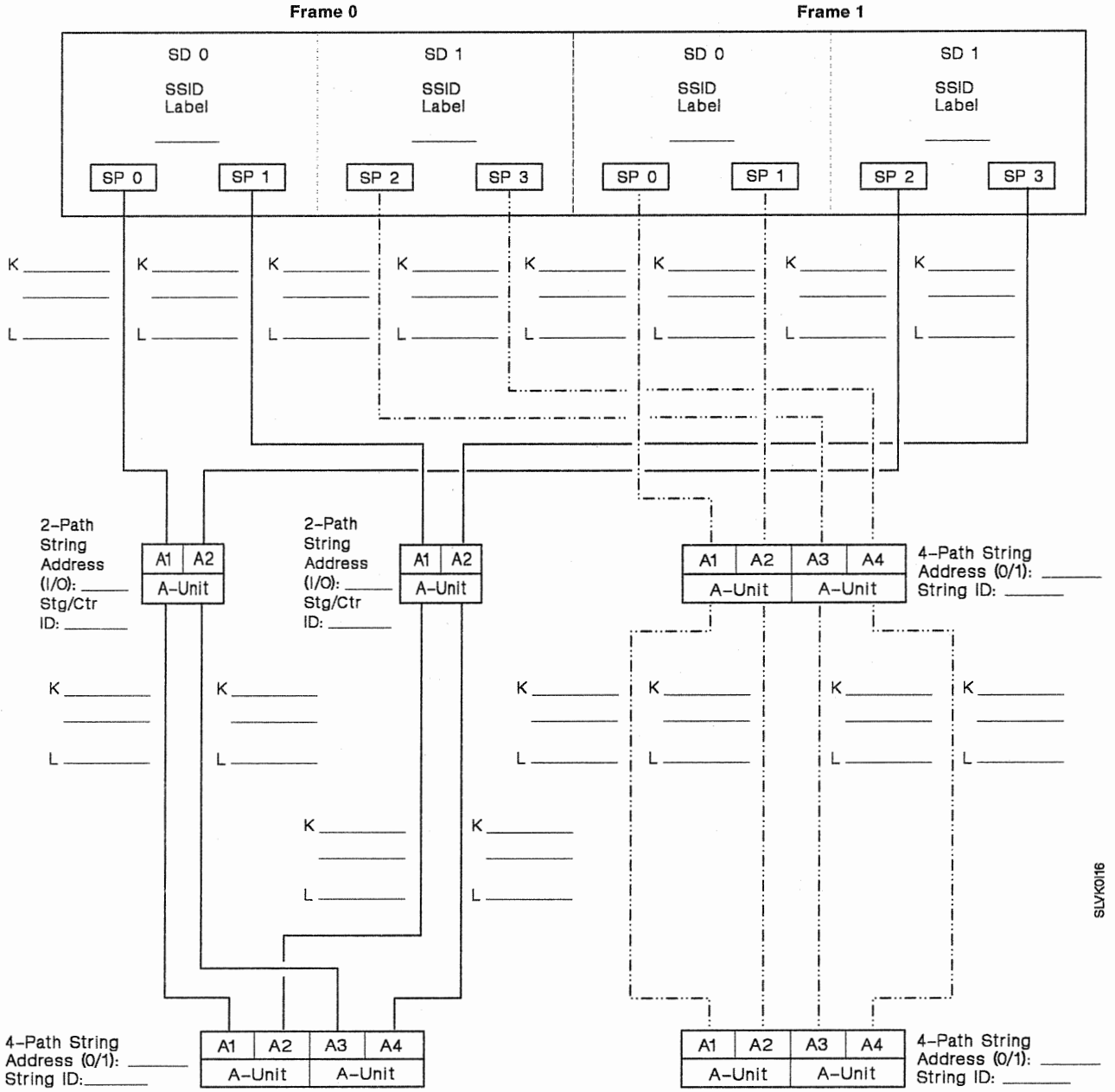

Legend

K = Key
L = Length
SD = Storage Path
SP = Storage Path
SSID = Subsystem Identifier
Stg/Ctr ID = String ID/Controller ID

Notes:
1. One 2-path DASD string in the DLSE intermix logical DASD subsystem is optional.
2. One 4-path DASD string in the DLSE logical DASD subsystem is optional.

Dual-Frame 3990 Model 2 or 3 Subsystem Configuration (DLSE Mode With Intermixed 4-Path and 2-Path DASD Strings and DLSE Mode)

SSID for the Subsystem Attached to:

Frame 0, SD 0 and Frame 1, SD 1: _____

Frame 0, SD 1 and Frame 1, SD 0: _____

Number of Addressable Devices for the Subsystem Attached to:

Frame 0, SD 0 and Frame 1, SD 1 is: 64

Frame 0, SD 1 and Frame 1, SD 0 (32 or 64): _____

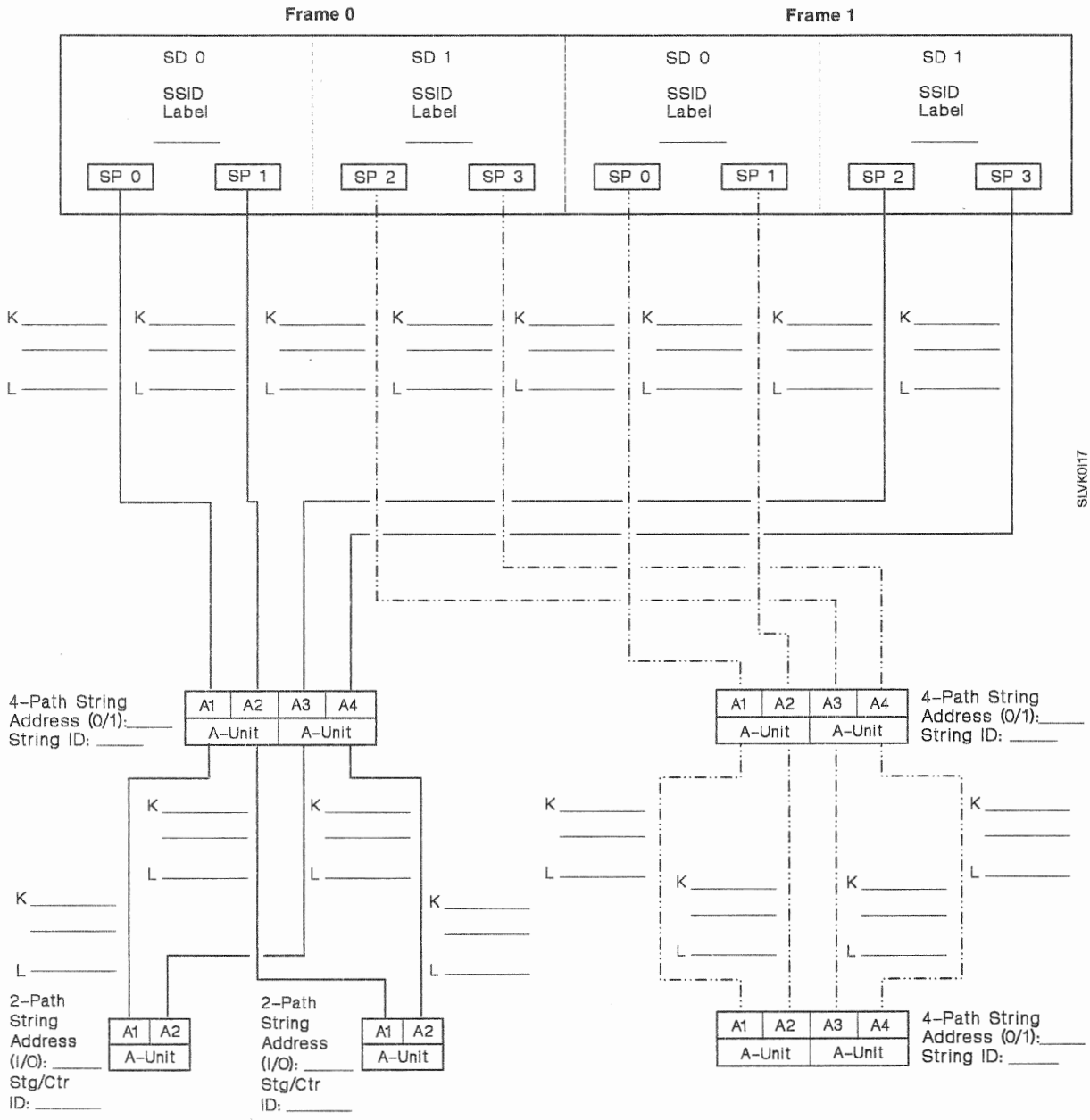

Legend

K = Key
L = Length
SD = Storage Path
SP = Storage Path
SSID = Subsystem Identifier
Stg/Ctr ID = String ID/Controller ID

Notes:

1. One 2-path DASD string in the DLSE intermix logical DASD subsystem is optional.
2. One 4-path DASD string in the DLSE logical DASD subsystem is optional.

Dual-Frame 3990 Model 2 or 3 Subsystem Configuration (DLSE Mode and DLSE Mode With Intermixed 2-Path and 4-Path DASD Strings)

SSID for the Subsystem Attached to:

Frame 0, SD 0 and Frame 1, SD 1: _____

Frame 0, SD 1 and Frame 1, SD 0: _____

Number of Addressable Devices for the Subsystem Attached to:

Frame 0, SD 0 and Frame 1, SD 1 (32 or 64): _____

Frame 0, SD 1 and Frame 1, SD 0 is: 64

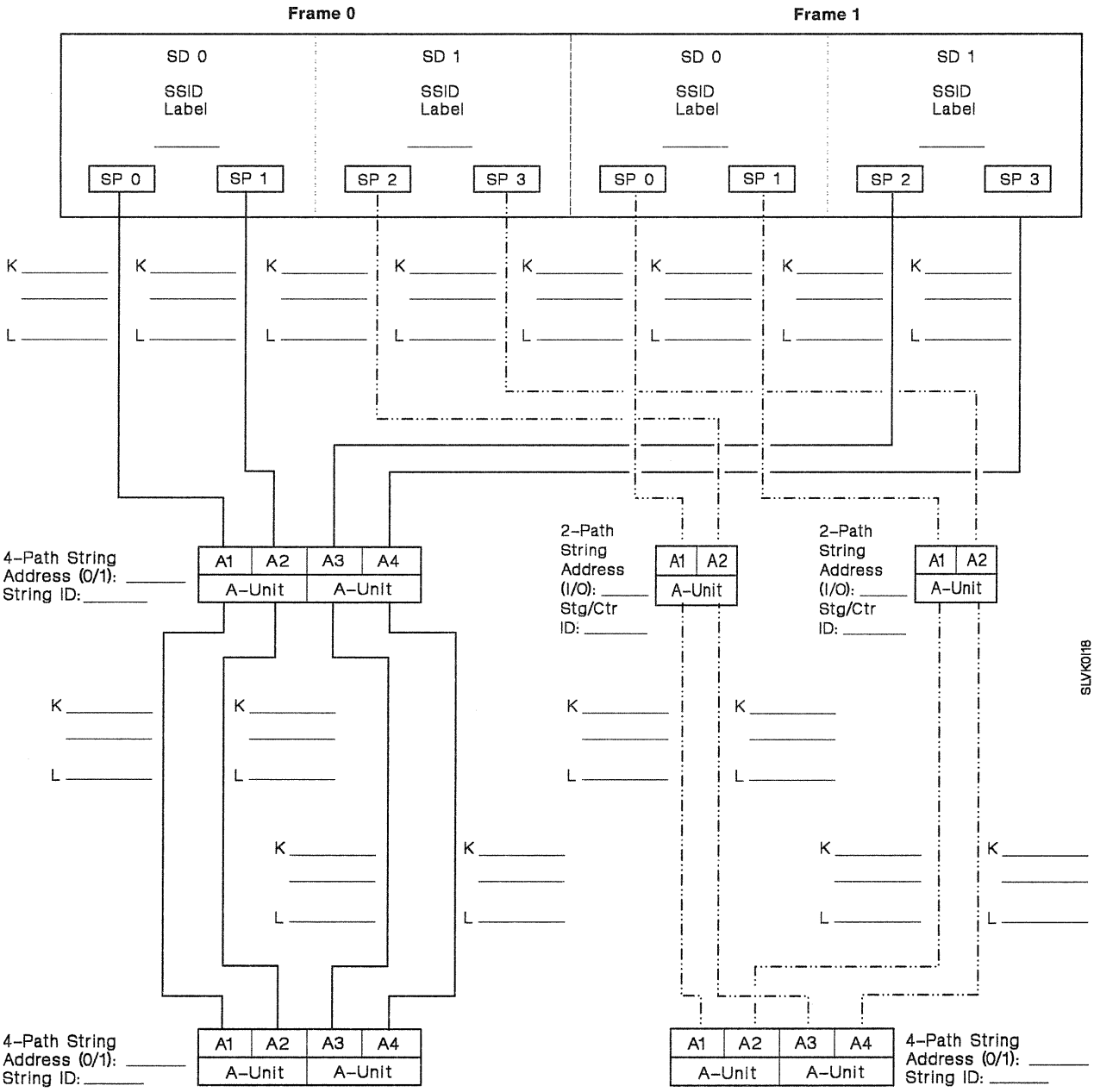

Legend

K = Key
L = Length
SD = Storage Path
SP = Storage Path
SSID = Subsystem Identifier
Stg/Ctr ID = String ID/Controller ID

Notes:

1. One 2-path DASD string in the DLSE intermix logical DASD subsystem is optional.
2. One 4-path DASD string in the DLSE logical DASD subsystem is optional.

Dual-Frame 3990 Model 2 or 3 Subsystem Configuration (DLSE Mode and DLSE Mode With Intermixed 4-Path and 2-Path DASD Strings)

SSID for the Subsystem Attached to:

Frame 0, SD 0 and Frame 1, SD 1: _____

Frame 0, SD 1 and Frame 1, SD 0: _____

Number of Addressable Devices for the Subsystem Attached to:

Frame 0, SD 0 and Frame 1, SD 1 (32 or 64): _____

Frame 0, SD 1 and Frame 1, SD 0 is: 64

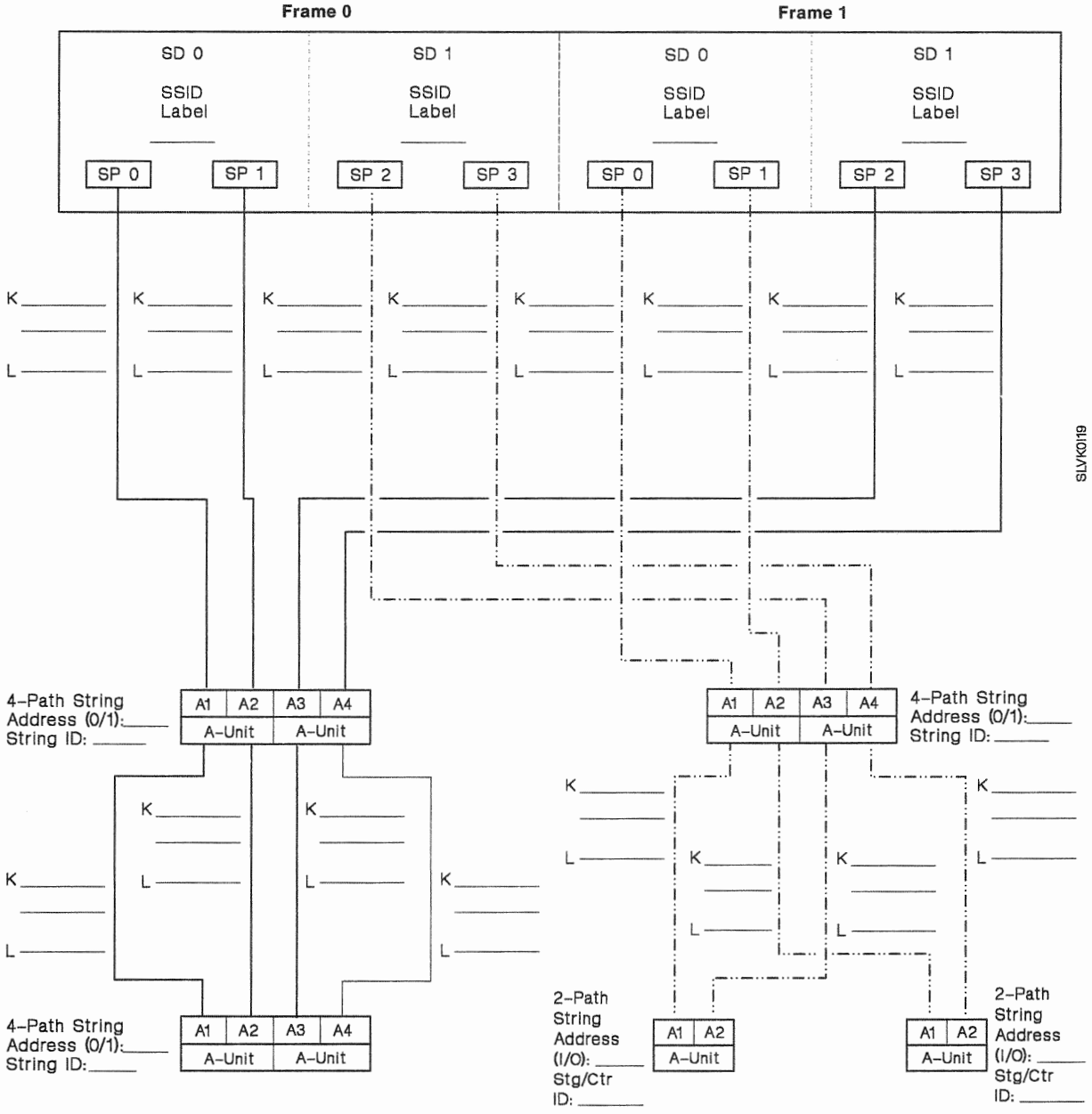

Legend

K = Key
L = Length
SD = Storage Path
SP = Storage Path
SSID = Subsystem Identifier
Stg/Ctr ID = String ID/Controller ID

Notes:

1. One 2-path DASD string in the DLSE intermix logical DASD subsystem is optional.
2. One 4-path DASD string in the DLSE logical DASD subsystem is optional.

3990 Power Sequence Control Cable Worksheets

3990 Model 1 Power Sequence Control Cable Worksheet (DLS Mode)

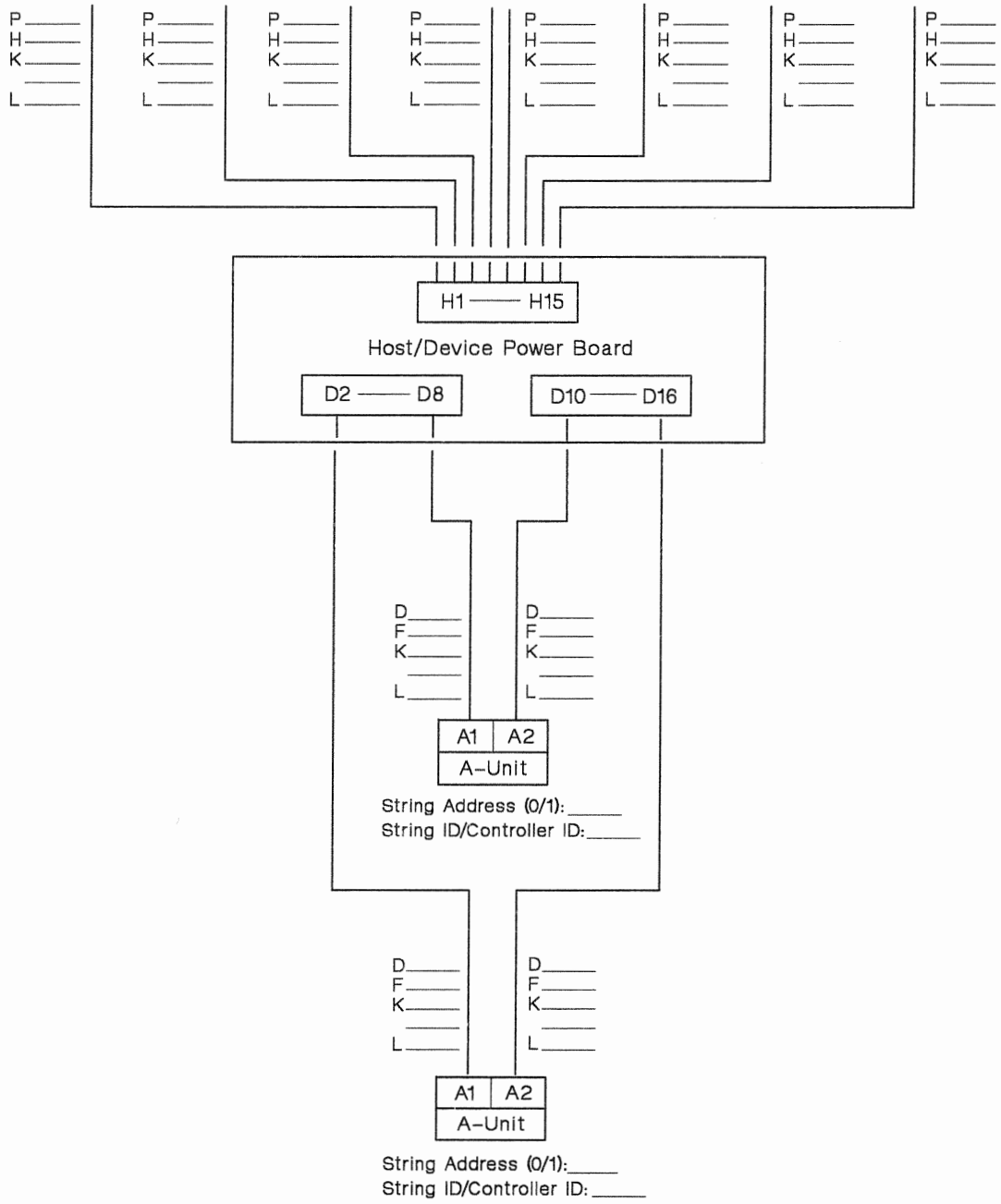

Legend

D = D Connector
F = Frame
H = H Connector
K = Key
L = Length
P = Processor Identifier

slvk0p01

3990 Model 2 or 3 Power Sequence Control Cable Worksheet (DLSE Mode)

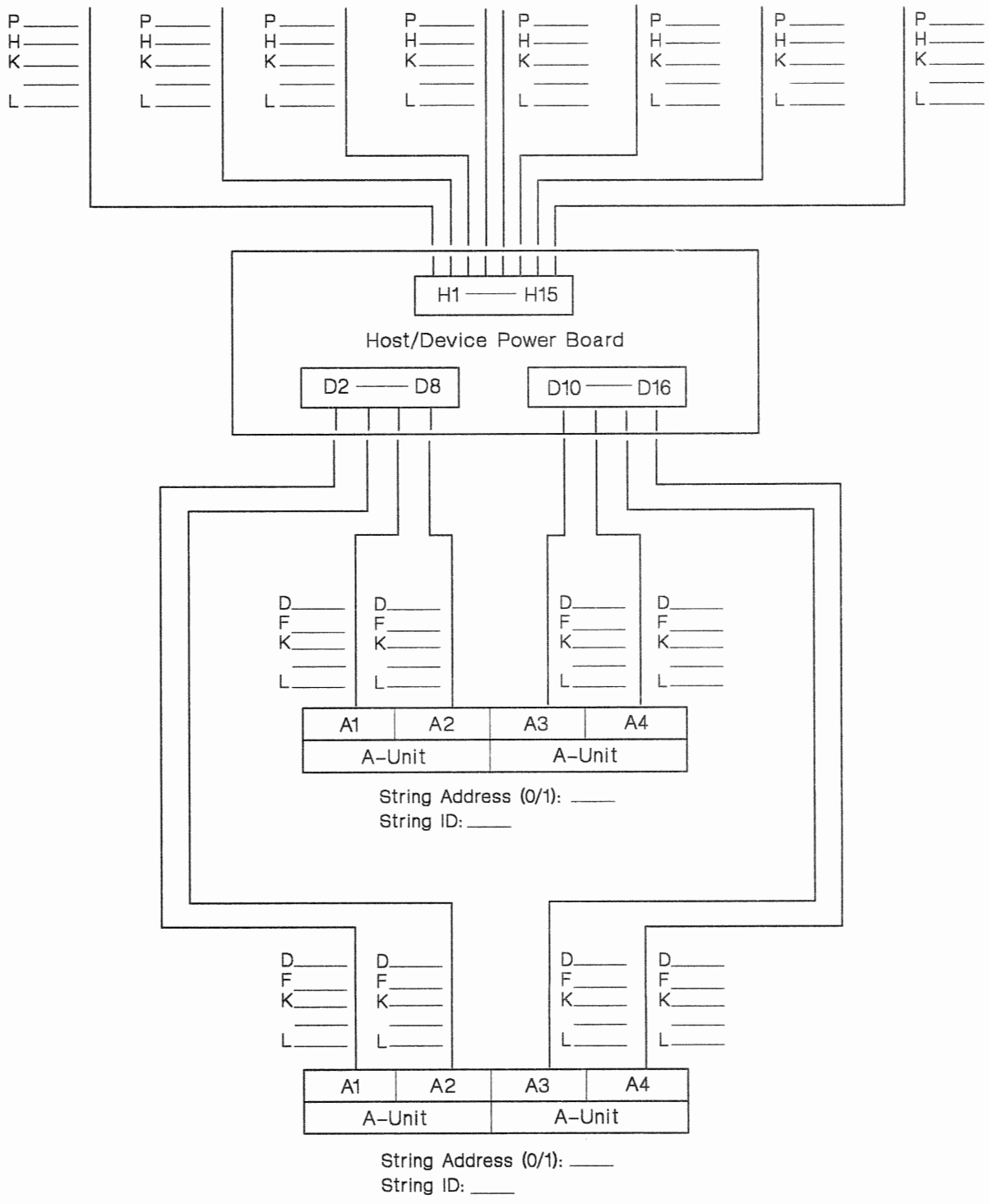

Legend

D = D Connector
F = Frame
H = H Connector
K = Key
L = Length
P = Processor Identifier

stvk0p02

3990 Model 2 or 3 Power Sequence Control Cable Worksheet (DLS Mode)

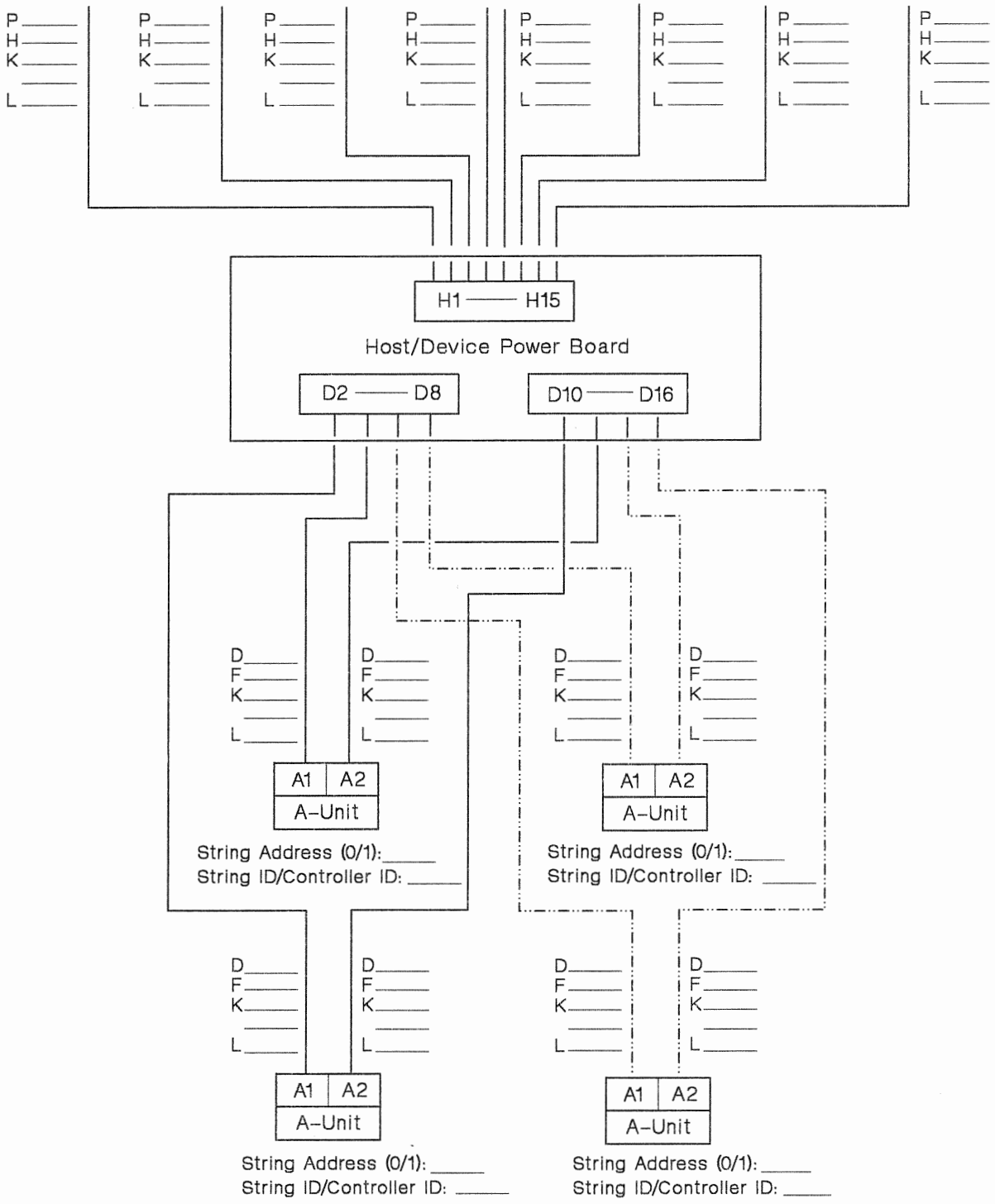

Legend

D = D Connector
F = Frame
H = H Connector
K = Key
L = Length
P = Processor Identifier

slvk0p03

3990 Model 2 or 3 Power Sequence Control Cable Worksheet (DLSE Mode With Intermixed 2-Path and 4-Path DASD Strings)

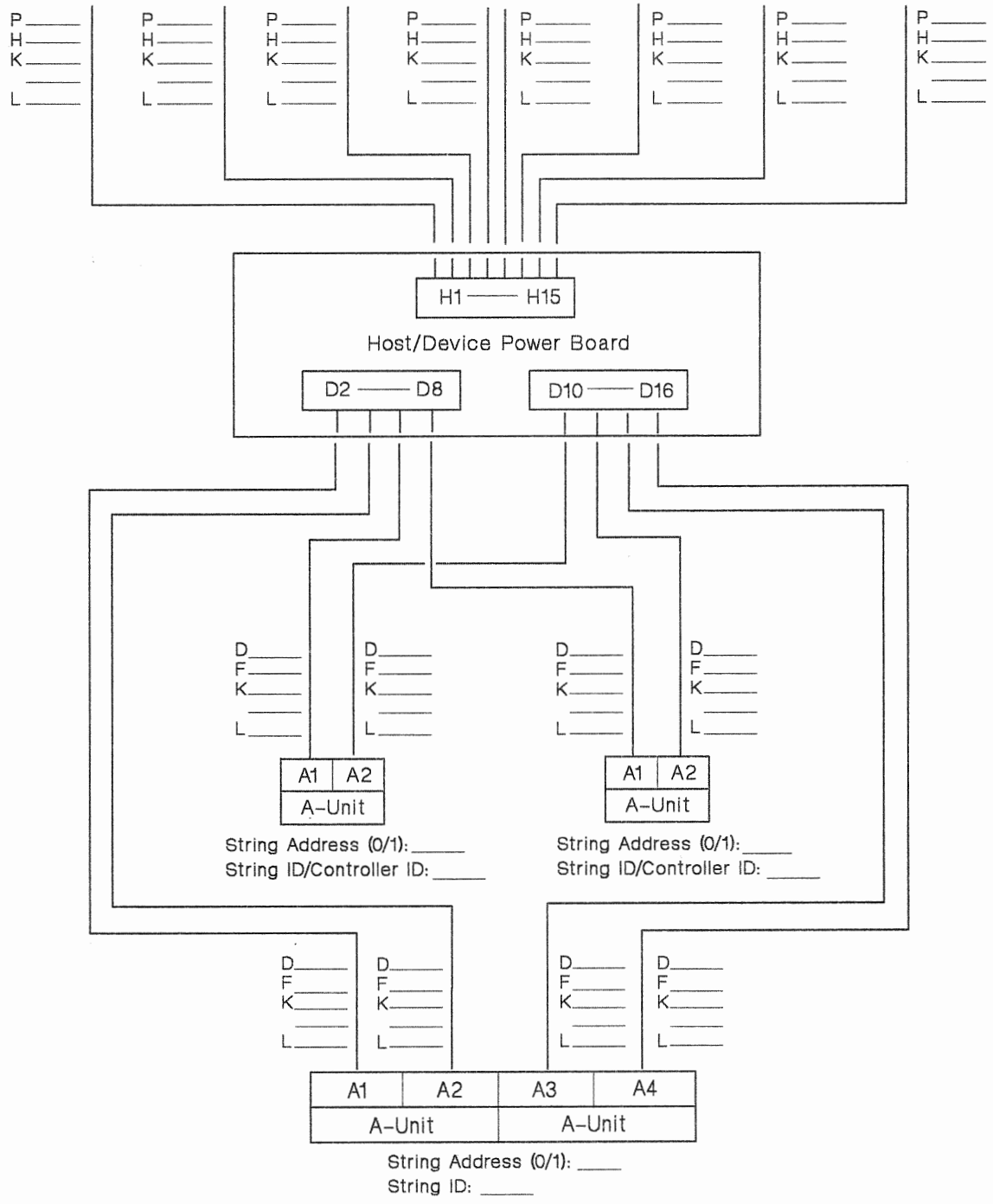

Legend

D = D Connector
F = Frame
H = H Connector
K = Key
L = Length
P = Processor Identifier

slvk0p04

3990 Model 2 or 3 Power Sequence Control Cable Worksheet (DLSE Mode With Intermixed 4-Path and 2-Path DASD Strings)

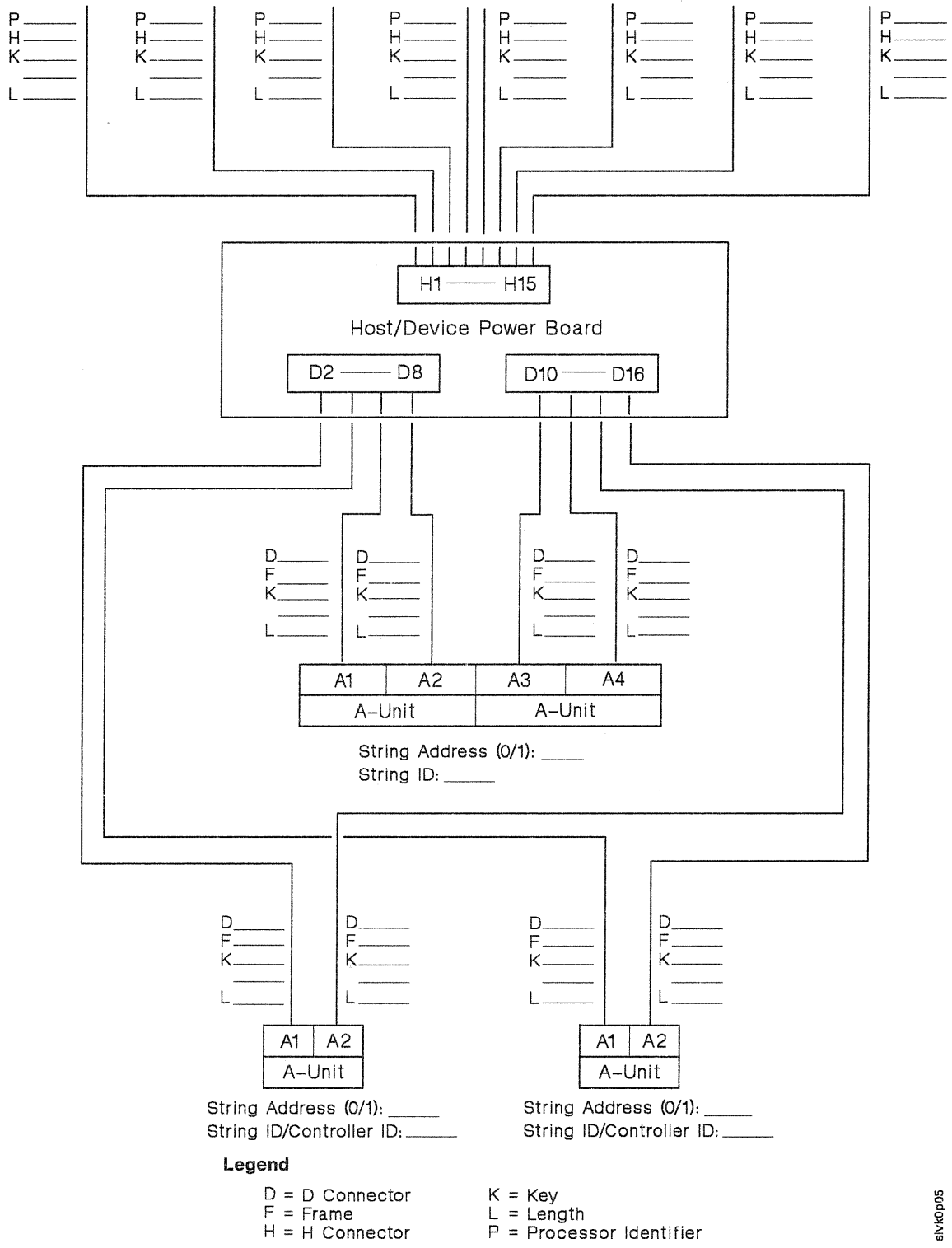

Legend

D = D Connector
F = Frame
H = H Connector
K = Key
L = Length
P = Processor Identifier

slvk0p05

Dual-Frame 3990 Model 2 or 3 Power Sequence Control Cable Worksheet (DLSE Mode)

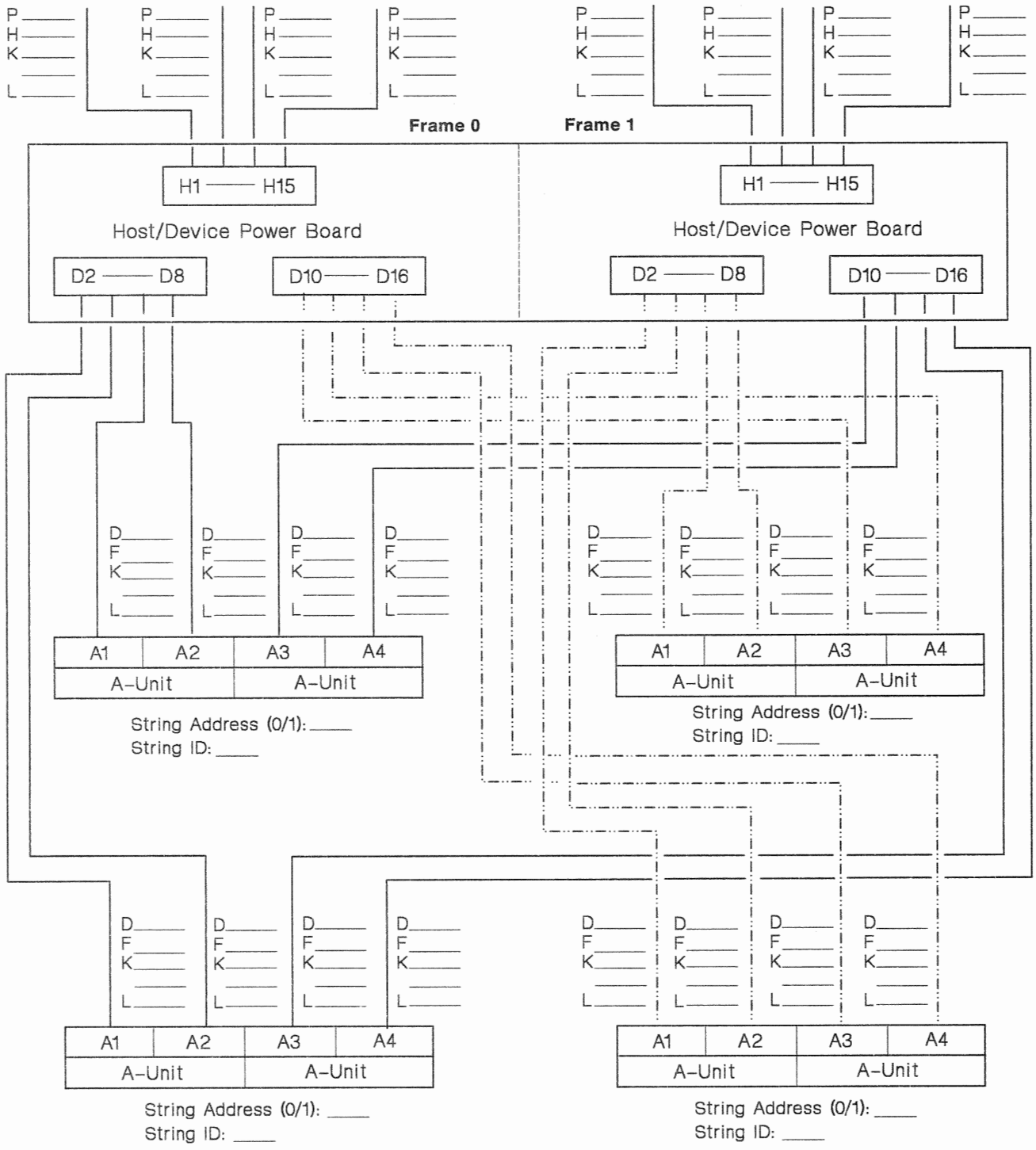

Legend

D = D Connector
F = Frame
H = H Connector
K = Key
L = Length
P = Processor Identifier

slvk0p06

Dual-Frame 3990 Model 2 or 3 Power Sequence Control Cable Worksheet (DLS Mode)

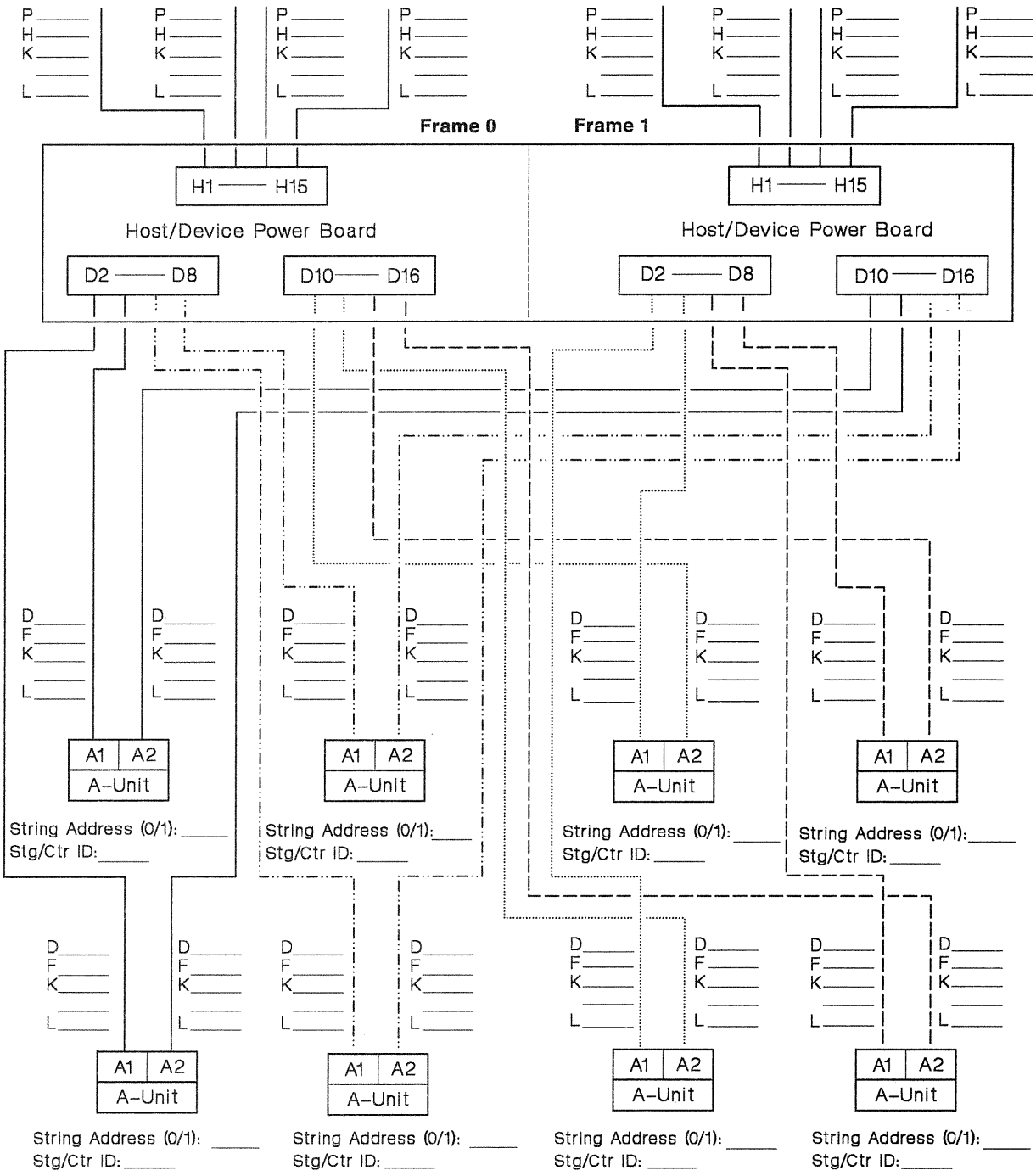

Dual-Frame 3990 Model 2 or 3 Power Sequence Control Cable Worksheet (DLSE Mode With Intermixed 2-Path and 4-Path DASD Strings)

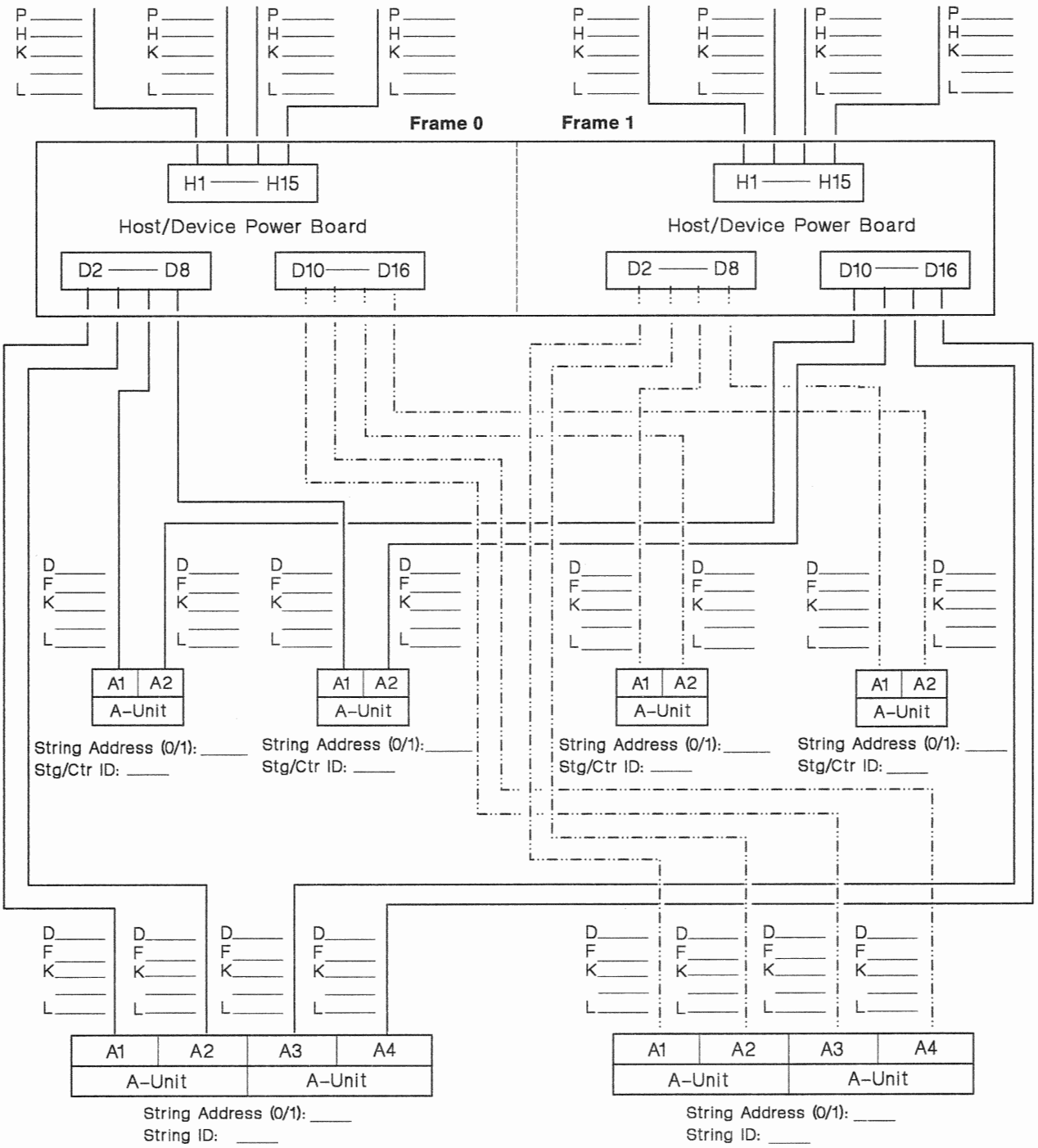

Legend

D = D Connector
F = Frame
H = H Connector
K = Key
L = Length
P = Processor Identifier
Stg/Ctr ID = String ID/Controller ID

slvk0p08

Dual-Frame 3990 Model 2 or 3 Power Sequence Control Cable Worksheet (DLSE Mode With Intermixed 4-Path and 2-Path DASD Strings)

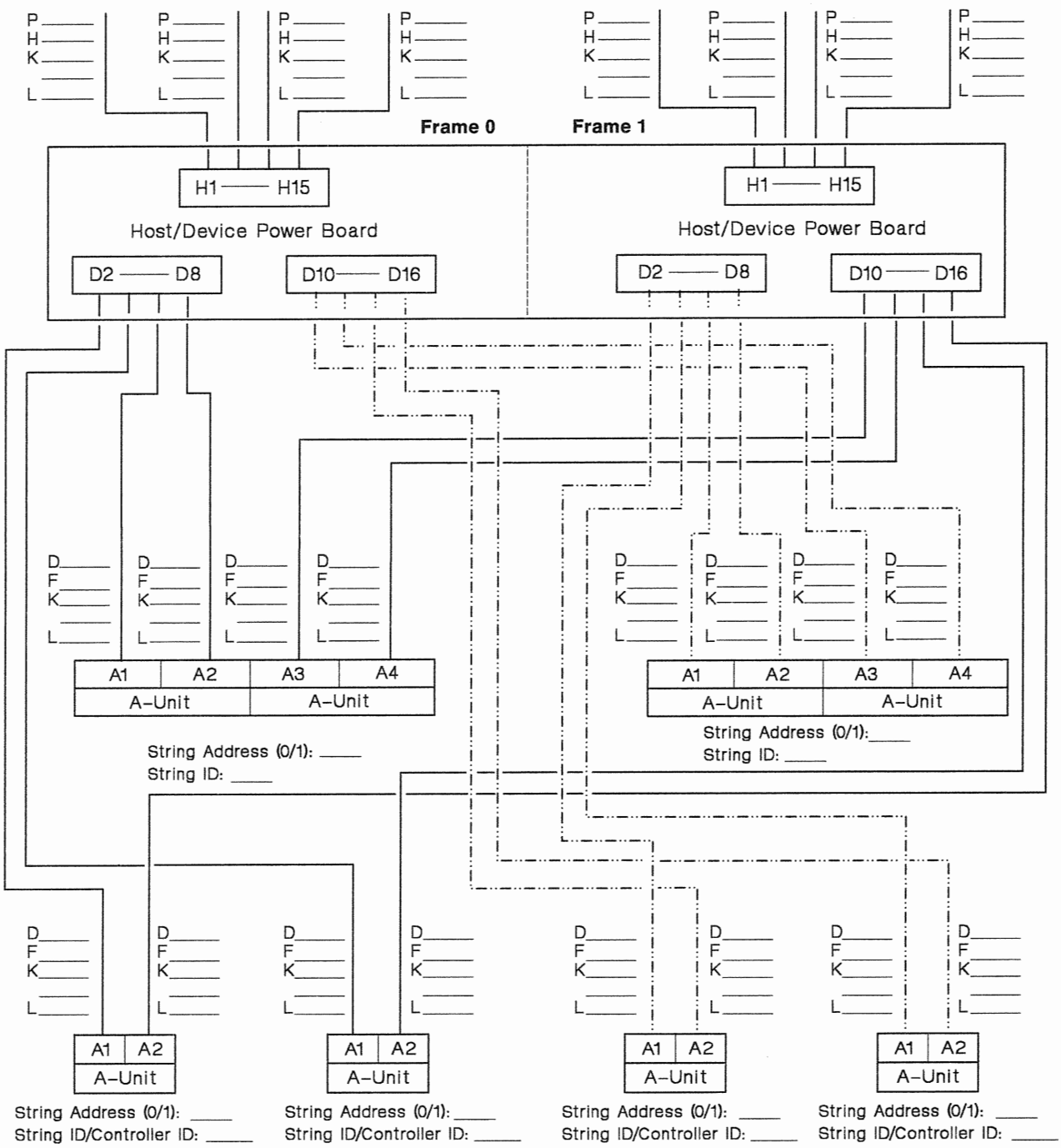

Legend

D = D Connector
F = Frame
H = H Connector
K = Key
L = Length
P = Processor Identifier

sivk0d09

Dual-Frame 3990 Model 2 or 3 Power Sequence Control Cable Worksheet (DLS and DLSE Mode)

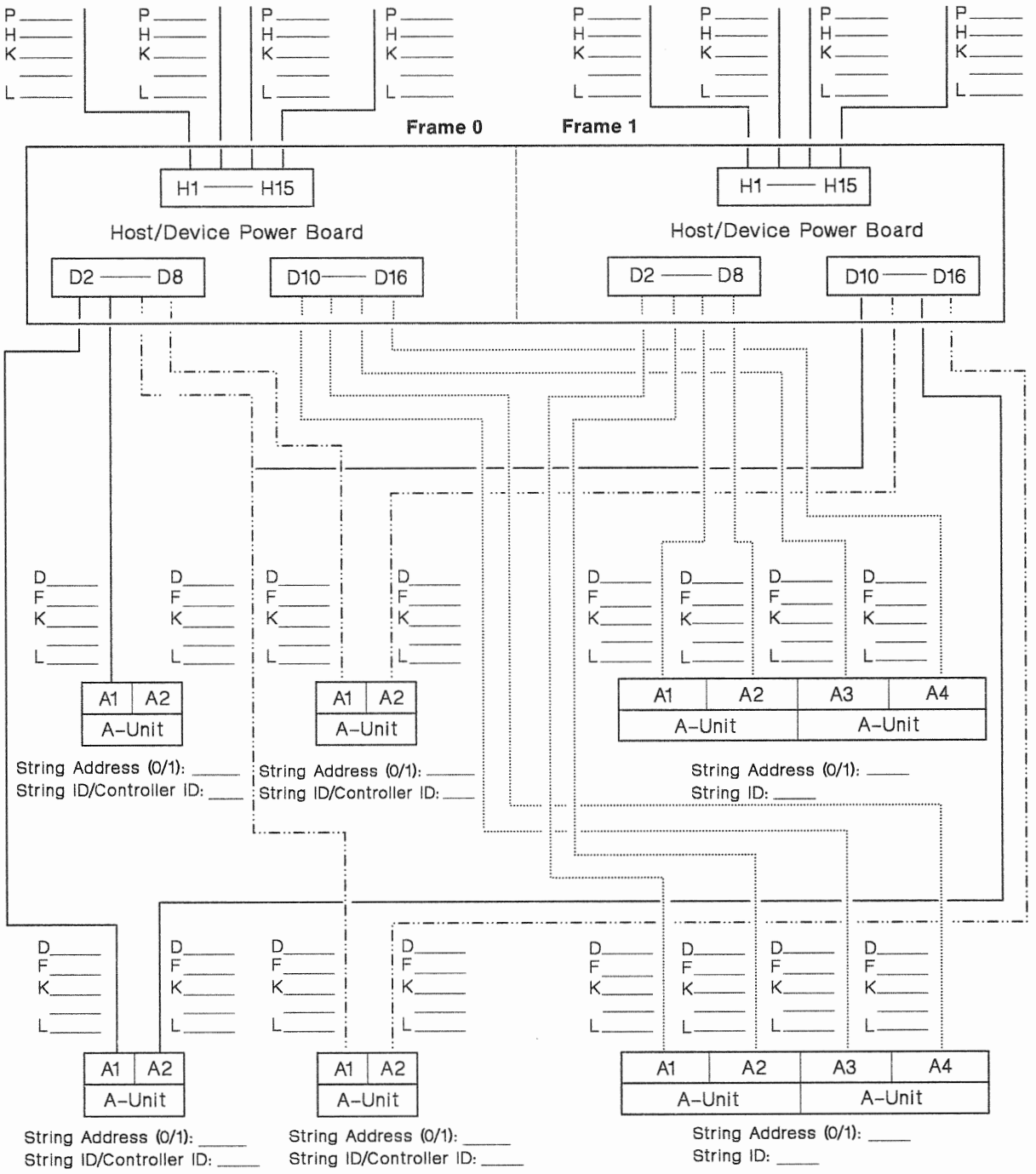

Legend

D = D Connector
F = Frame
H = H Connector
K = Key
L = Length
P = Processor Identifier

slvk0p10

Dual-Frame 3990 Model 2 or 3 Power Sequence Control Cable Worksheet (DLSE and DLS Mode)

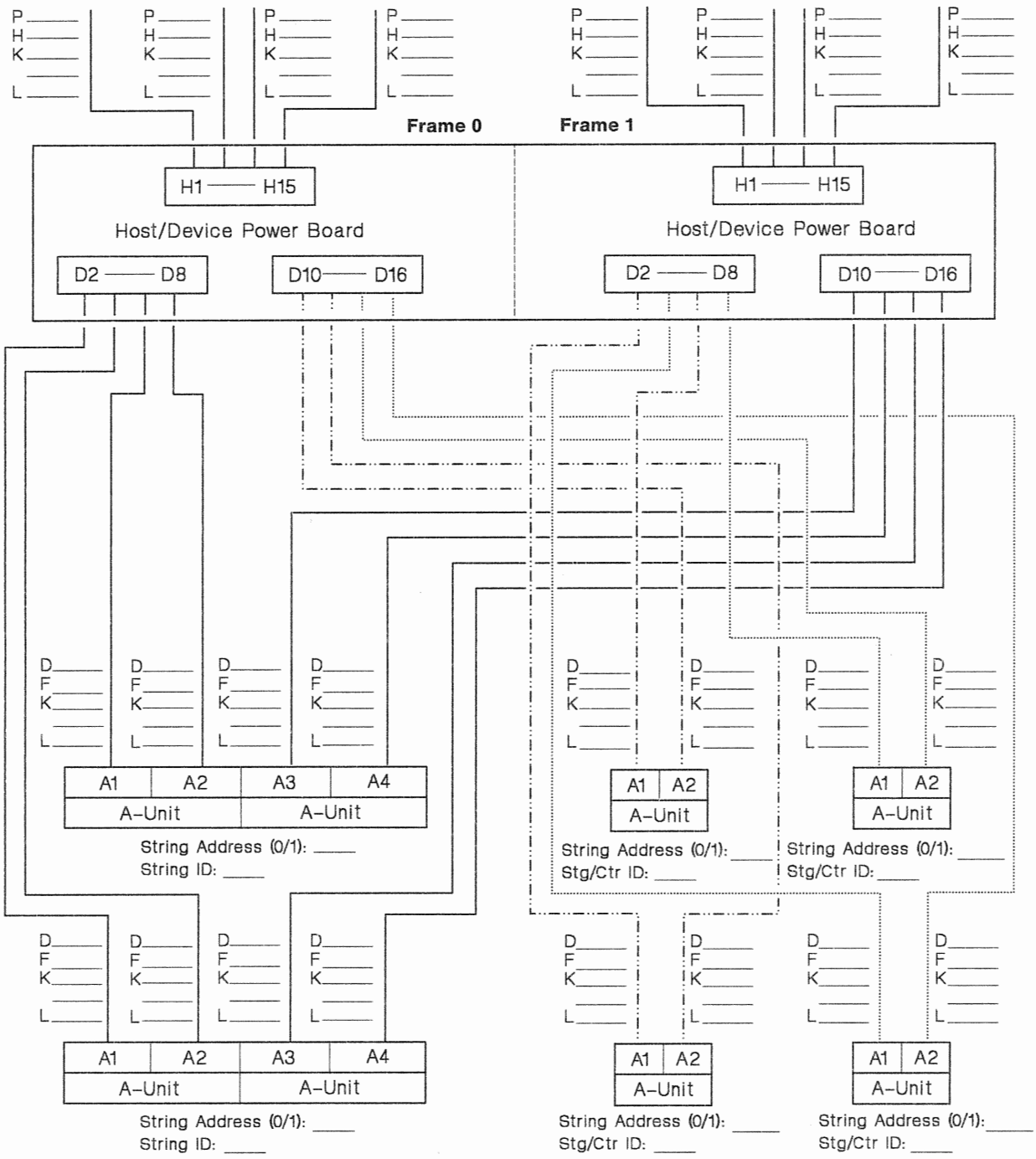

Legend

D = D Connector
F = Frame
H = H Connector
K = Key
L = Length
P = Processor Identifier
Stg/Ctr ID = String ID/Controller ID

sivk0pt1

Dual-Frame 3990 Model 2 or 3 Power Sequence Control Cable Worksheet (DLS and DLSE Mode With Intermixed 2-Path and 4-Path DASD Strings)

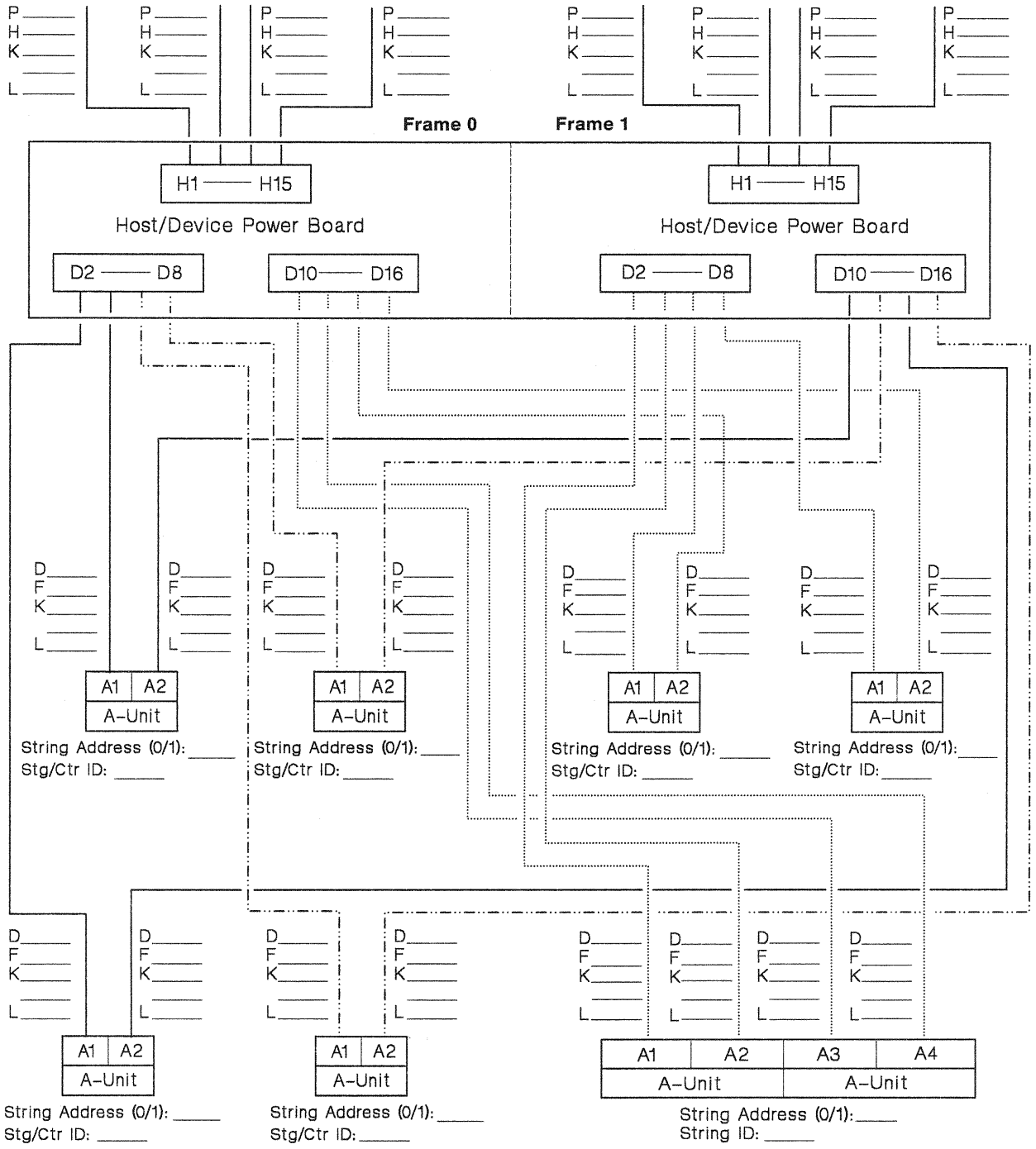

Legend

D = D Connector
F = Frame
H = H Connector
K = Key
L = Length
P = Processor Identifier
Stg/Ctr ID = String ID/Controller ID

slvk0p12

Dual-Frame 3990 Model 2 or 3 Power Sequence Control Cable Worksheet (DLS and DLSE Mode With Intermixed 4-Path and 2-Path DASD Strings)

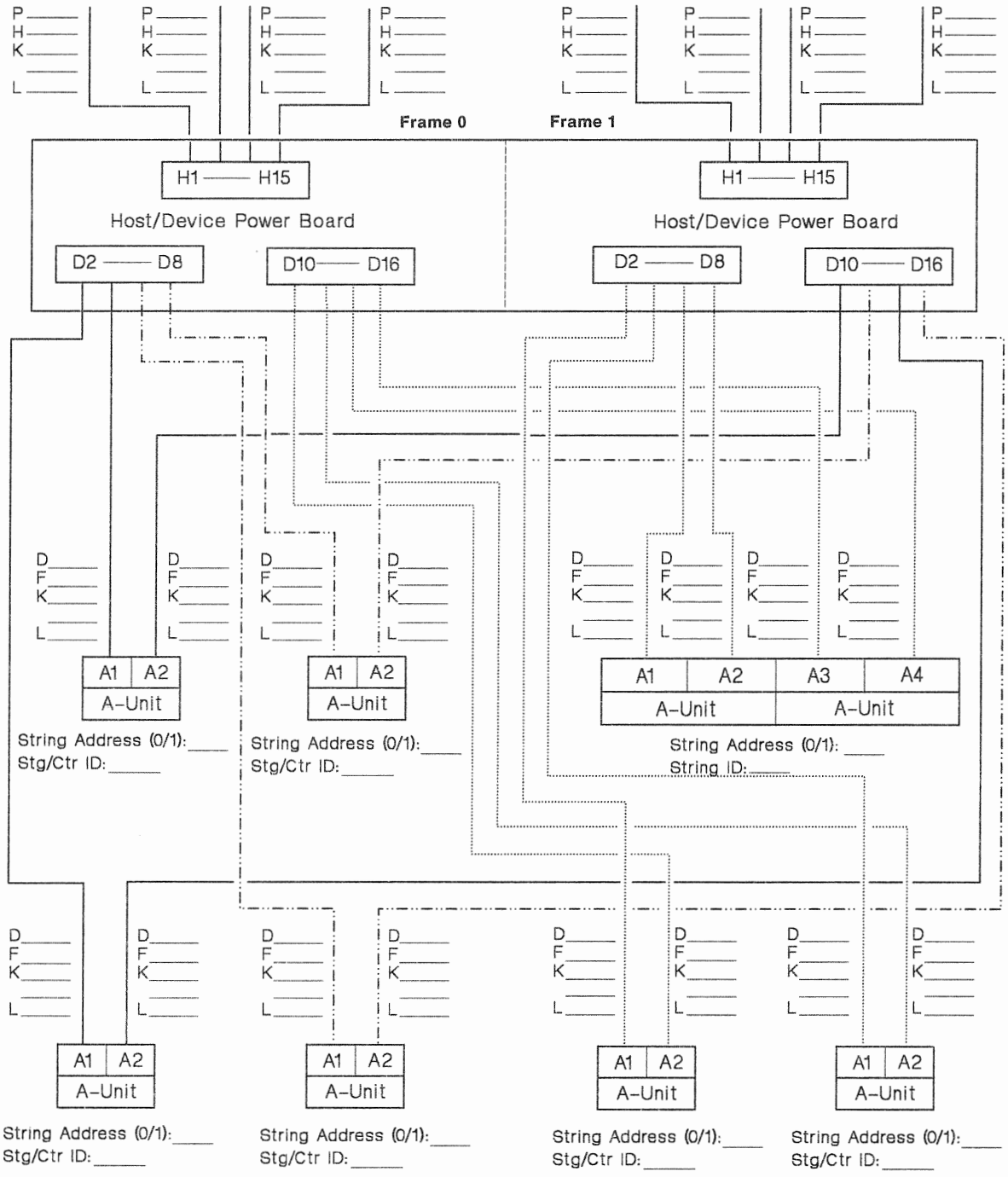

Legend

D = D Connector
F = Frame
H = H Connector
K = Key
L = Length
P = Processor Identifier
Stg/Ctr ID = String ID/Controller ID

slvk0pt3

Dual-Frame 3990 Model 2 or 3 Power Sequence Control Cable Worksheet (DLSE Mode With Intermixed 2-Path and 4-Path DASD Strings and DLS Mode)

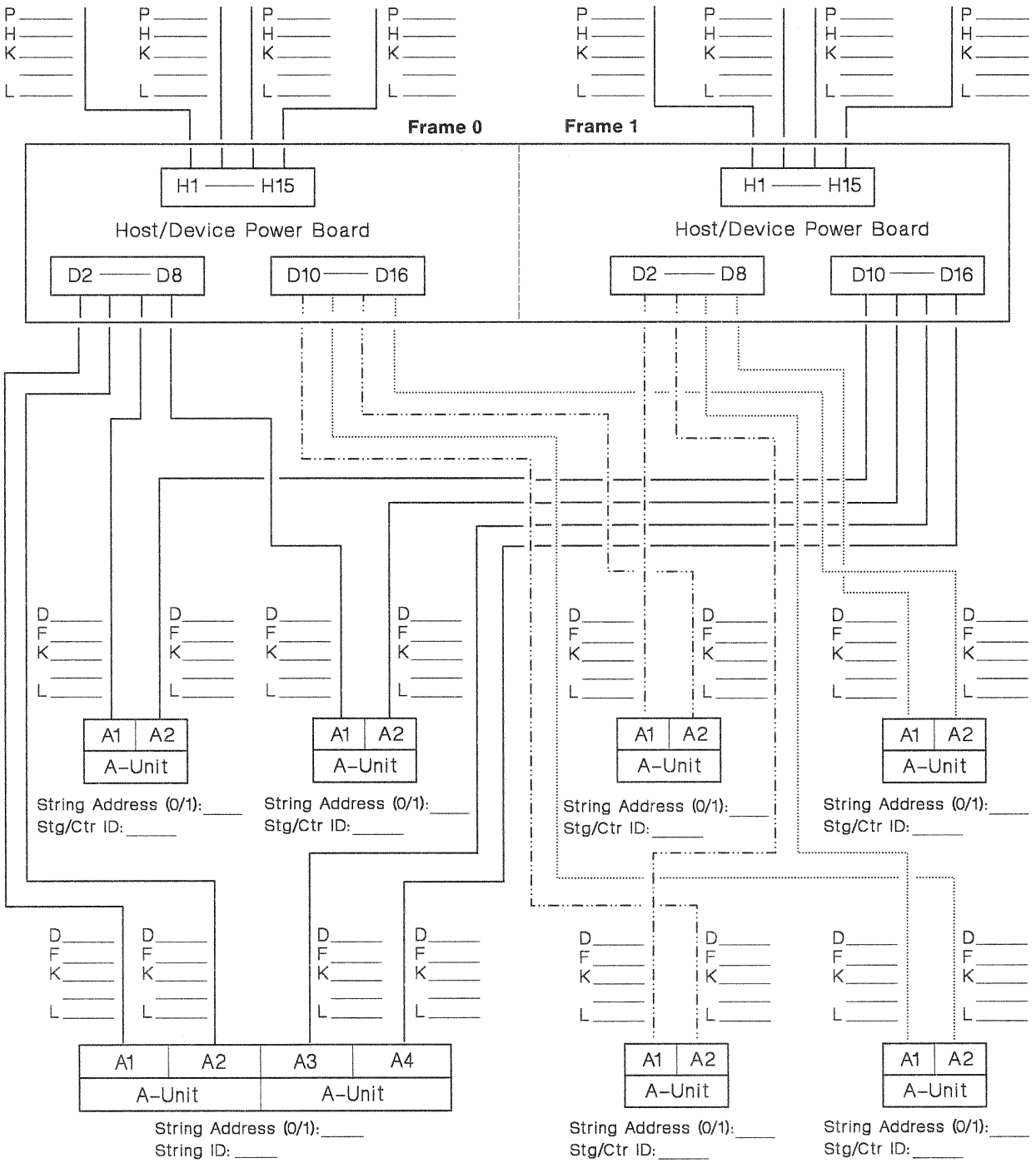

Legend

D = D Connector
F = Frame
H = H Connector
K = Key
L = Length
P = Processor Identifier
Stg/Ctr ID = String ID/Controller ID

slvk0p14

Dual-Frame 3990 Model 2 or 3 Power Sequence Control Cable Worksheet (DLSE Mode With Intermixed 4-Path and 2-Path DASD Strings and DLS Mode)

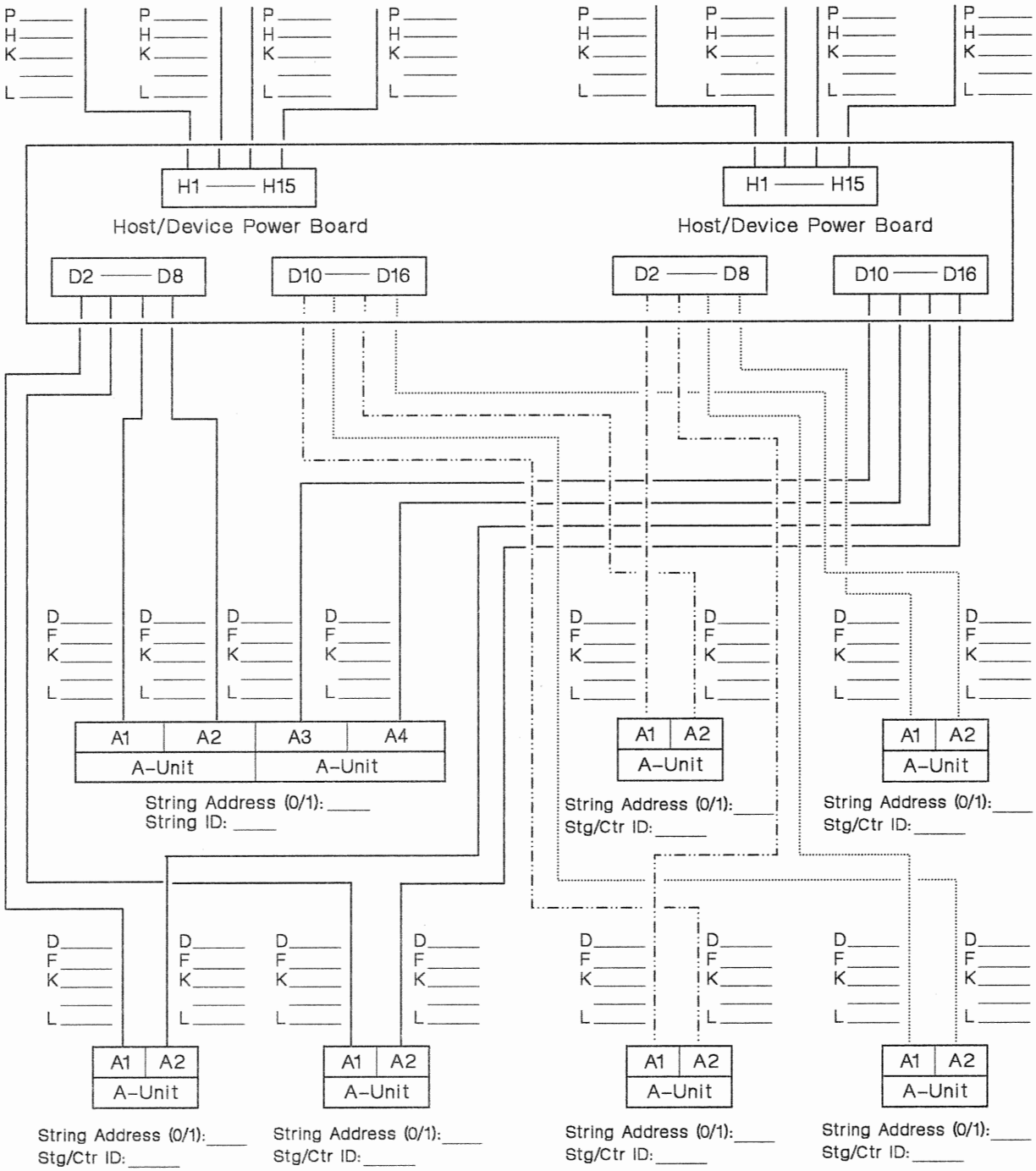

Legend

D = D Connector
F = Frame
H = H Connector
K = Key
L = Length
P = Processor Identifier
Stg/Ctr ID = String ID/Controller ID

slvk0p15

Dual-Frame 3990 Model 2 or 3 Power Sequence Control Cable Worksheet (DLSE Mode With Intermixed 2-Path and 4-Path DASD Strings and DLSE Mode)

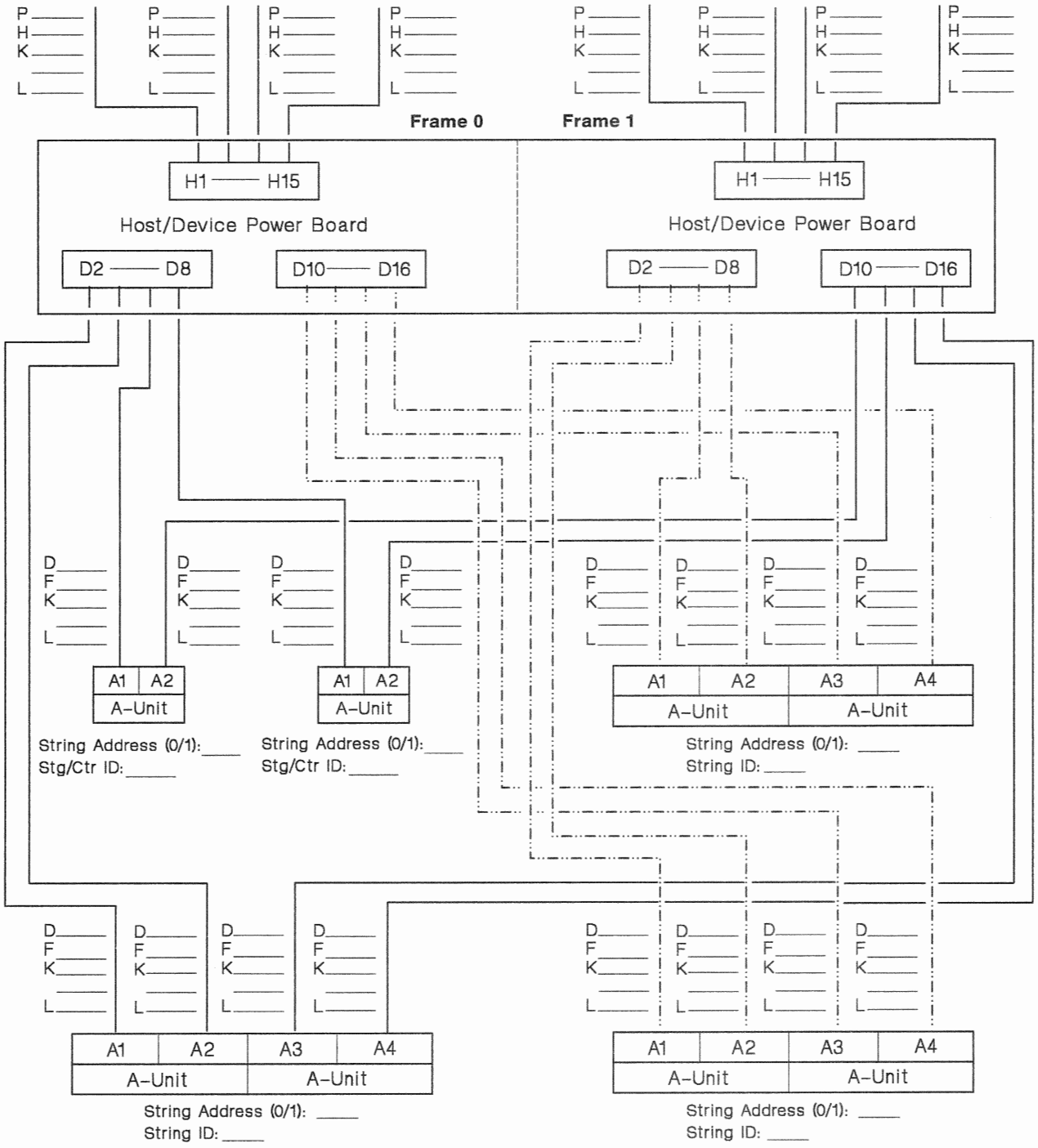

Legend

D = D Connector
F = Frame
H = H Connector
K = Key
L = Length
P = Processor Identifier
Stg/Ctr ID = String ID/Controller ID

slvkt0pt8

Dual-Frame 3990 Model 2 or 3 Power Sequence Control Cable Worksheet (DLSE Mode With Intermixed 4-Path and 2-Path DASD Strings and DLSE Mode)

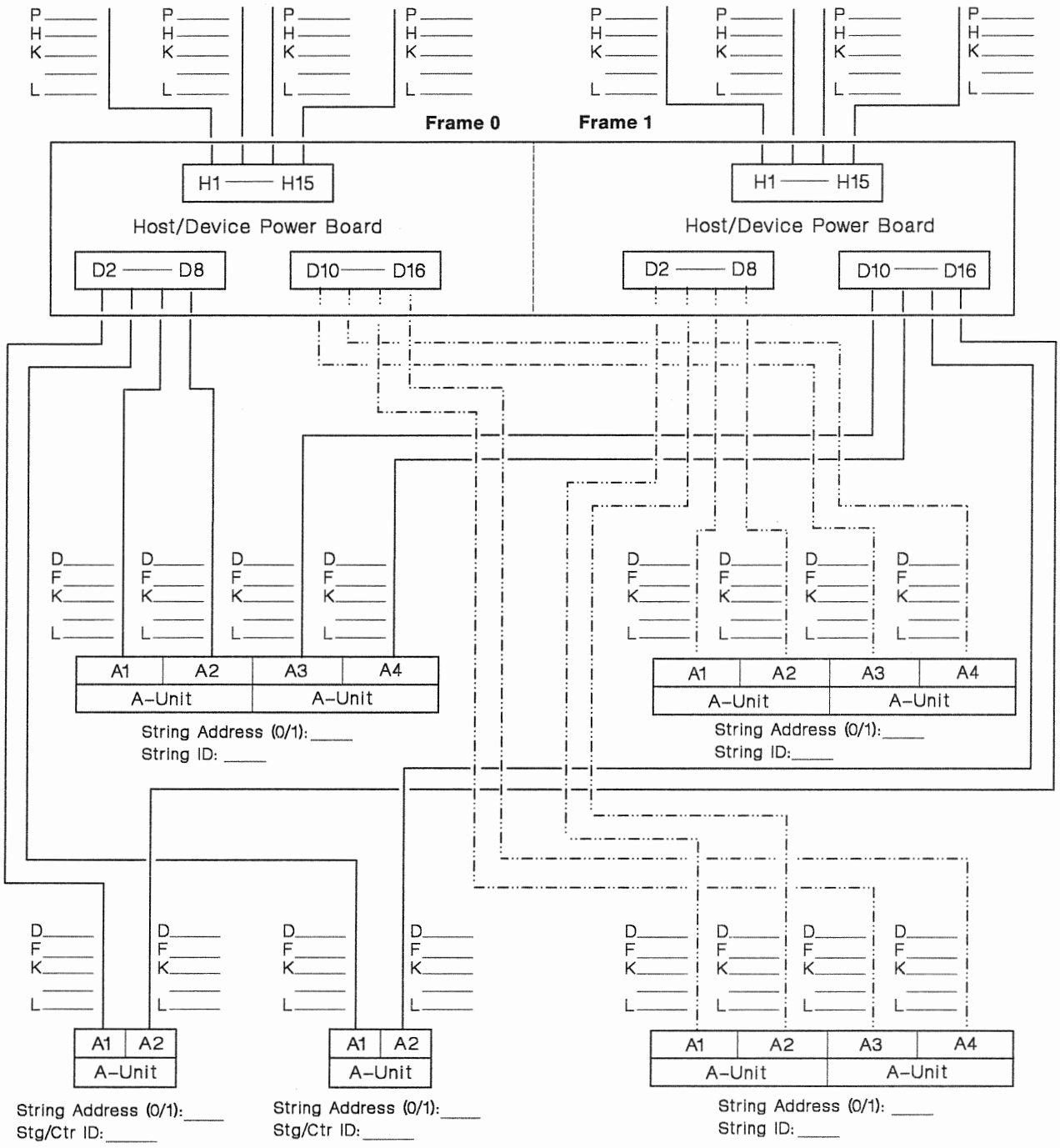

Legend

D = D Connector
F = Frame
H = H Connector
K = Key
L = Length
P = Processor Identifier
Stg/Ctr ID = String ID/Controller ID

slvk0pt7

Dual-Frame 3990 Model 2 or 3 Power Sequence Control Cable Worksheet (DLSE Mode and DLSE Mode With Intermixed 2-Path and 4-Path DASD Strings)

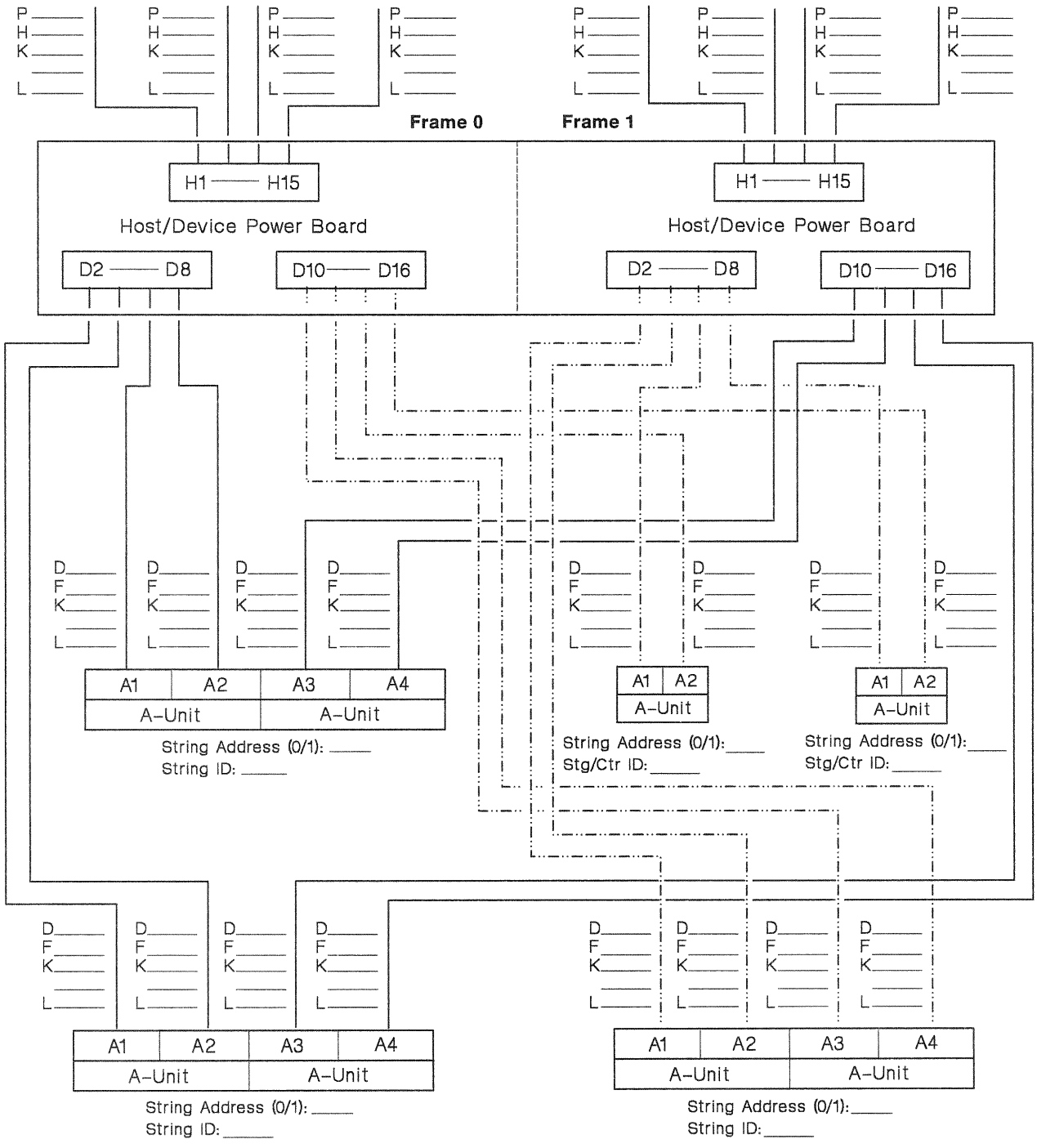

Legend

D = D Connector
F = Frame
H = H Connector
K = Key
L = Length
P = Processor Identifier
Stg/Ctr ID = String ID/Controller ID

slvk0p18

Dual-Frame 3990 Model 2 or 3 Power Sequence Control Cable Worksheet (DLSE Mode and DLSE Mode With Intermixed 4-Path and 2-Path DASD Strings)

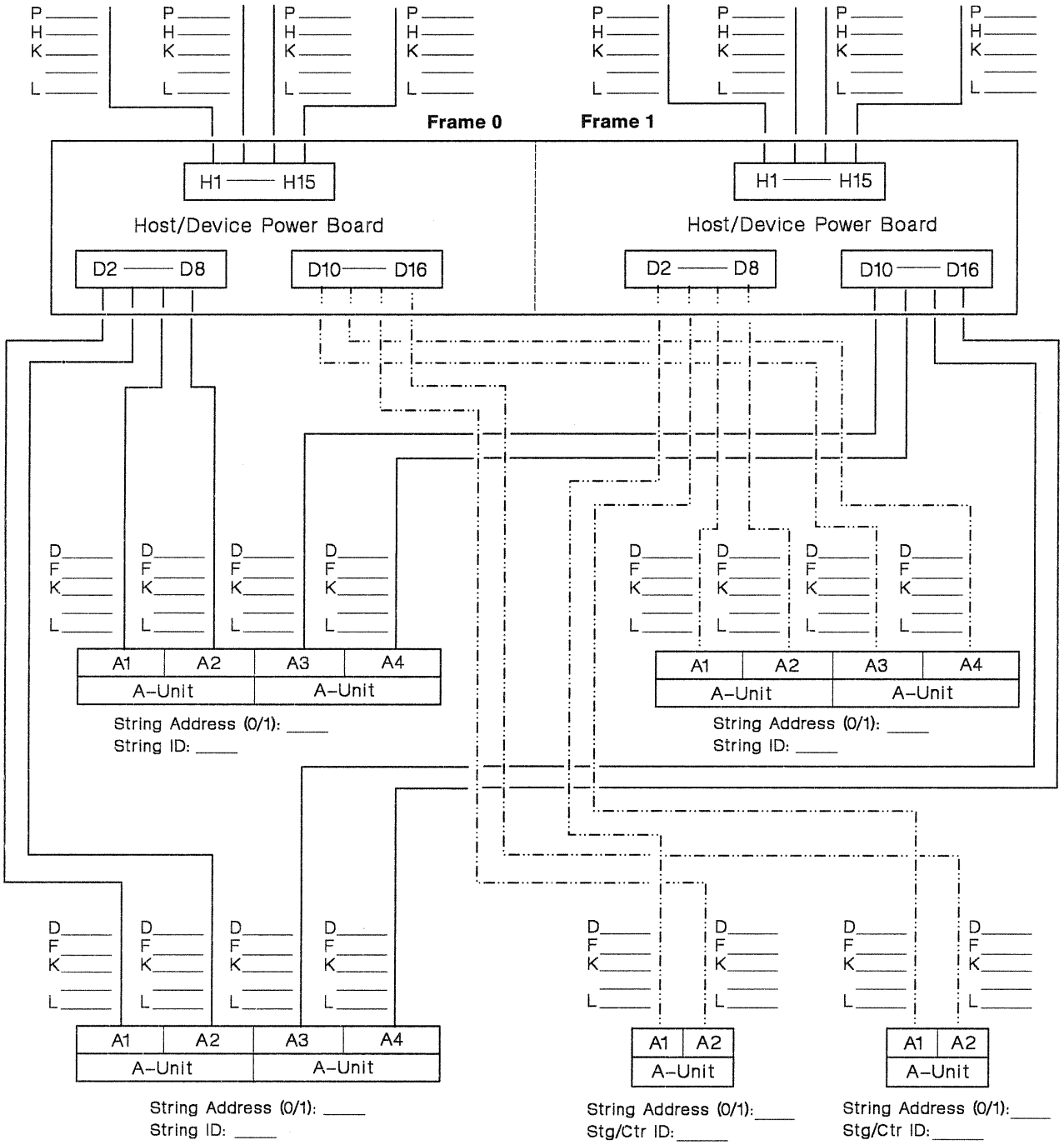

Legend

D = D Connector
F = Frame
H = H Connector
K = Key
L = Length
P = Processor Identifier
Stg/Ctr ID = String ID/Controller ID

slvk0p19

Acronym List

This acronym list contains definitions for acronyms used in the various books in the Storage Subsystem Library. The acronyms in this list are not necessarily used in *this specific* book. Some terms are more specifically defined in the glossary.

CCHH cylinder, cylinder, head, head

CCHHR cylinder, cylinder, head, head, record

CCW channel command word

CHL-I channel interface

CHPID channel path identifier

CI control interval

CKD count-key data

CMS Conversational Monitor System

CP control program

CTL-I control interface

DASD direct access storage device

DCB data control block

DFDSS Data Facility Data Set Services

DFHSM Data Facility Hierarchical Storage Manager

DFSORT Data Facility SORT

DL data length

DLS device level selection

DLSE device level selection enhanced

DPS dynamic path selection

ECKD extended count-key data

EOF end-of-file

ERDS error recording data set

EREP Environmental Record Editing and Printing

FBA fixed-block architecture

FCCHH Flag, cylinder, cylinder, head, head.

FRU field replaceable unit

Gb gigabyte

GBOF general bill of form

GRS MVS global resource serialization

HA home address

HDA head-disk assembly

ID identifier

IML initial microcode load

IOCP I/O configuration program

I/O input/output

IPL initial program load

ISMF Interactive Storage Management Facility

ISPF/PDF Interactive System Productivity Facility / Program Development Facility

JCL job control language

KL key length

KVA kilovolt x ampere

LRU least recently used algorithm

Mb megabyte

MAP maintenance analysis procedure

NVS nonvolatile storage

R0 record zero

RACF/VM Resource Access Control Facility / VM

RMF Resource Measurement Facility

RPS rotational position sensing

RTM/SF Realtime Monitor / Systems Facility

SCA shared control array

SF support facility

SIM service information message

SLR Service Level Reporter

SMF System Management Facilities

SMS Storage Management Subsystem

SQL/DS Structured Query Language / Data System

SSID subsystem identifier

TPF Transaction Processing Facility

UCB unit control block

VMMAP VM Monitor Analysis Program

VMPPF VM Performance Planning Facility

VTOC volume table of contents

Glossary

This glossary contains disk storage subsystem terms used in the various books of the Storage Subsystem Library (SSL). To help explain some of the terms related to configuration of storage subsystems, several illustrations are included at the end of this glossary. The definitions of certain terms include references to these illustrations. Some of the illustrations may reflect hardware configurations not supported in your operating environment.

Each of the terms included here is not necessarily used in *this specific* book. If you do not find the term you are looking for, refer to the index or to *Dictionary of Computing*, SC20-1699.

A

A-unit. The direct access storage unit that contains the controller functions to attach to the storage control. An A-unit controls the B-units that are attached to it and is often referred to as a head of string.

access authorization. Bits in the Define Extent file mask that define one of the three authorization groups for a channel program (normal authorization, device support authorization, or diagnostic authorization).

access mechanism. See actuator.

active duplex state. A state of operation that occurs when both devices in a dual-copy logical volume are automatically updated. See also duplex state and suspended duplex state.

actuator. A set of access arms and their attached read/write heads, which move as an independent component within a head and disk assembly (HDA). For example, the 3380 Model AK4 has two HDAs, each containing two actuators. See also device and volume.

alternate track. On a direct access storage device, a track designated to contain data in place of a defective primary track.

B

B-unit. A direct access storage unit that attaches to the subsystem through an A-unit. A B-unit has no controller functions.

C

C-unit. A direct channel attach 3380 direct access storage unit that contains both the storage control functions and the DASD controller functions. A 3380 C-unit functions as a head of string and controls the B-units that are attached to it.

cache. A random access electronic storage in selected storage controls used to retain frequently used data for faster access by the channel. For example, 3880 Model 23 and 3990 Model 3 contain cache.

cache fast write. A form of fast write where the data is written directly to cache without using nonvolatile storage and is available for later destaging. This 3990 Model 3 Storage Control function should be used for data of a temporary nature, or data which is readily recreated, such as the sort work files created by the appropriate release of DFSORT.

cache fast write data. Data that the channel command modifies in cache and not on DASD. It has read-hit performance benefits for write hits. See cache fast write.

central complex. All the subsystems in a storage control.

channel connection address. The I/O address that uniquely identifies an I/O device to the channel during an I/O operation.

channel interface (CHL-I). The circuitry of a storage control that attaches storage paths to a host channel.

check-1 error. In the storage control and DASD, an error that does not allow the use of normal machine functions to report details of the error condition.

check-2 error. In the storage control and DASD, an error that can be reported using the normal machine functions.

cluster. See storage cluster.

concurrent maintenance. A 3990 Model 2 and 3 capability that permits a service representative to perform a service action on one storage cluster while normal DASD access operations continue on the other cluster.

On the 3990 Model 3, a service representative can perform most service actions on *nonvolatile storage* while caching and DASD access operations continue through both the storage clusters.

On the 3990 Model 3, a service representative can perform most service actions on *cache* while DASD access operations continue through both the storage clusters. During a cache service action, cache fast write and DASD fast write operations are not performed and dual copy operations are performed directly with the DASD.

connection check alert. The electronic signal used by the 3380 to indicate a check-1 error condition to the storage control. See check-1 error.

contingent allegiance. A state the storage path establishes for an I/O device that allows only the channel path that is communicating with the I/O device to continue to do so. This state occurs when the channel accepts a status byte that contains unit check.

control interface (CTL-I). The hardware connection between the storage control function and the DASD controller function.

control unit. A hardware device that controls the reading, writing, or displaying of data at one or more input/output devices. See also storage control.

controller. The hardware component of a DASD head of string unit that provides the path control and data transfer functions. For example, there are two controllers in a 3380 Model AE4, AK4, or CJ2.

controller address. The 1-bit address used by the storage control to direct commands to the correct DASD string on the CTL-I. Controller address applies to the 3380 Models AA4, AD4, and AE4. See also string address.

controller ID. An 8-bit identifier that uniquely identifies the physical string regardless of the selection address. It identifies to the service representative, by means of EREP, a failing subsystem component (controller or device) without having to translate a selection address (which may have little relation to a physical address) to a physical component. The controller ID is the number shown on the operator panel. Controller ID applies to the 3380 Models AA4, AD4, and AE4. See also string ID.

count-key-data (CKD). A DASD data recording format employing self-defining record formats in which each record is represented by a count area, that identifies the record and specifies its format, an optional key area that may be used to identify the data area contents, and a data area that contains the user data for the record. CKD is also used to refer to a set of channel commands that are accepted by a device that employs the CKD recording format. See extended count-key-data architecture.

D

DASD. Direct access storage device; for example, a 3380.

DASD fast write. A form of fast write to cache where the data is written concurrently to cache and nonvolatile storage and automatically scheduled for destaging to the DASD. Both copies are retained in the storage control until the data is completely written to the DASD, providing data integrity equivalent to writing directly to the DASD. DASD fast write is available with a 3990 Model 3 Storage Control.

DASD subsystem. One or more DASD strings and the storage control(s) to which the DASD are attached.

demotion. The process of removing the image of one or more records from cache. A set of one or more DASD records is demoted either by being selected for replacement (overlay) by another set of DASD records or by being marked invalid. Compare to promotion.

destage. The asynchronous write of new or updated data from cache or nonvolatile storage to DASD. This is used only for the fast write and dual copy functions of 3990 Model 3. See also fast write and write hit.

device. A uniquely addressable part of a DASD unit that consists of a set of access arms, the associated disk surfaces, and the electronic circuitry required to locate, read, and write data. See also volume.

device address. Three or four hexadecimal digits that uniquely define a physical I/O device on a channel path in System/370 mode. The one or two leftmost digits are the address of the channel to which the device is attached. The two rightmost digits represent the unit address.

device ID. An 8-bit identifier that uniquely identifies a physical I/O device.

device level selection (DLS). A DASD function available with 3380 Models AD4, BD4, AE4, BE4, AJ4, BJ4, AK4, BK4, and CJ2. With DLS, each of the two controllers in the DASD string has a path to all devices in the string (as many as 14 addresses for a CJ2 or 16 addresses for other string types), and any two devices in the 2-path DASD string can read or write data simultaneously. See DLS support mode, and see Figure 88 on page 305 and Figure 89 on page 306.

device level selection enhanced (DLSE). A DASD function available with 3380 Models AJ4, BJ4, AK4, and BK4. With DLSE, each of the four controllers in the 4-path DASD string (as a result of interconnecting two A-units), has a path to all devices in the string (as many as 32 addresses), and any four devices in the 4-path DASD string can read or write data simultaneously.

See DLSE support mode, and see Figure 90 on page 307 and Figure 91 on page 308.

device number. Four hexadecimal digits that logically identify an I/O device in a System/370 Extended Architecture or Enterprise Systems Architecture/370 Systems.

device release. A command that terminates the reservation of the device from the channel issuing the command or from all channels on the interface path group.

device reserve. A command that reserves the device for the channel issuing the command, or for all channels in the same interface path group.

device support authorization. Channel programs executing with this authorization can access all tracks in all track groups, and can execute all Locate Record operations.

Device Support Facilities program (ICKDSF). A program used to initialize DASD at installation and provide media maintenance.

device support tracks. Reserved tracks of a DASD volume that store defect skipping information. This information is used by host utility programs such as ICKDSF.

diagnostic authorization. Channel programs using diagnostic authorization can access the diagnostic and device support tracks only.

diagnostic tracks. Tracks used by the diagnostic programs for testing the read/write function.

director. See storage director.

director-to-device connection (DDC). The control interface that connects a storage path in the storage control to a controller in the DASD A-unit.

diskette drive. A direct access storage device that uses diskettes as the storage medium. A 3880 uses a read-only diskette drive for microcode storage; a 3990 and a 3380 Model CJ2 use a read/write diskette drive for microcode storage and storage control error logs.

DLS support mode. A mode of operation in a 3990 Storage Control that supports 3380 2-path strings, including 3380 AA4 strings and 3380 AD4, AE4, AJ4, and AK4 2-path strings. DLS support mode must be specified by the IBM service representative at installation for the 3990. See single-path storage director, and see Figure 89 on page 306.

DLSE support mode. A mode of operation in a 3990 Model 2 or 3 Storage Control that supports 3380 AJ4 and AK4 4-path strings. DLSE support mode must be specified by the IBM service representative at installation time for the 3990. See multipath storage director, and see Figure 90 on page 307 and Figure 91 on page 308.

domain. A scope of operations control that spans all the parameters specified by the Locate Record command. For example, the Locate Record command allows only certain commands, and the commands must be in a correct sequence.

See also locate record domain.

DPS array. An electronic storage area that contains device status information. When any 3380 A-unit, except Model A04, is attached to a 3880 Storage Control, the DPS array resides in the A-units. When the same models are attached to a 3990, the DPS array function is part of the 3990 shared control array. The 3380 Model CJ2 contains DPS array in the storage control function.

dual copy. A high availability function made possible by nonvolatile storage in a 3990 Model 3. Dual copy maintains two functionally identical copies of designated DASD volumes in the logical 3990 Model 3 subsystem, and automatically updates both copies every time a write operation is issued to the dual-copy logical volume.

dual-copy logical volume. A logical volume comprised of two physical devices with all data recorded twice, once on each device. A 3990 Model 3 Storage Control automatically ensures that both devices are updated with each write operation to the dual-copy volume. Also called a duplex pair.

dual-frame configuration. Consists of two like storage controls physically interconnected. Pairs of 3880 Model 13 or Model 23 and 3990 Model 2 or Model 3 Storage Controls can be dual-framed. In a dual-frame configuration, each storage director in a logical DASD subsystem is in a different storage control. When a 3990 Storage Control is in DLS support mode, each DASD string has one path to a single-path storage director in each of the 3990 Storage Controls. When a 3990 Storage Control is in DLSE support mode, each DASD string has two paths to a multipath storage director in each of the 3990 Storage Controls.

duplex pair. See dual-copy logical volume.

duplex state. Two devices in a 3990 Model 3 subsystem are in duplex state when they have been made into a dual-copy logical volume.

dynamic path reconnect. A function of dynamic path selection (DPS) that allows disconnected DASD operations to reconnect over any available channel path rather than being limited to the one on which the I/O operation was started. It is available only on System/370 Extended Architecture and Enterprise Systems Architecture/370 Systems. For example, when

a 3990 Storage Control (in DLSE support mode) having four host channels is connected to a 3380 Model AJ4 or AK4 4-path string, any device can reconnect on any one of four completely independent data paths, providing improved performance and availability.

dynamic path selection (DPS). DASD subsystem functions available with all 3380 heads of string except Model A04. These functions include:

- Two controllers providing data paths from the 3380 strings to the storage directors
- Simultaneous transfer of data over two paths to two devices, providing the two devices are on separate internal paths within the string
- Sharing DASD volumes by using System-Related Reserve and Release
- Providing dynamic path reconnect to the first available path.

E

Environmental Record Editing and Printing (EREP) program. The program that formats and prepares reports from the data contained in the Error Recording Data Set (ERDS).

erase. To remove data from a data medium, leaving the medium available for recording new data.

error burst. A sequence of bit errors counted as one unit, or burst.

error correcting code (ECC). A code designed to detect and correct error bursts by the use of check bytes.

extended count-key-data (ECKD) architecture. A set of channel commands that use the CKD track format. This architecture employs the Define Extent and Locate Record commands to describe the nature and scope of a data transfer operation to the storage control to optimize the data transfer operation. The 3990 Storage Control supports the ECKD architecture.

extent. A set of consecutively addressed tracks that a channel program can access. The limits of an extent are defined by specifying the addresses of the first and last tracks in the extent.

F

fast dual copy. A dual copy capability where DASD fast write and dual copy are active concurrently to provide a significant dual copy performance enhancement.

fast write. In a 3990 Model 3 Storage Control, a write operation at cache speed that does not require immediate transfer of data to a DASD. The data is written directly to cache and/or nonvolatile storage and is available for later destaging. Fast write reduces the time an application must wait for the I/O operation to complete. See also DASD fast write, cache fast write, and destage.

fence. To separate one or more paths or elements from the remainder of the logical DASD subsystem. The separation is by logical boundaries rather than power boundaries. This separation allows isolation of failing components so that they do not affect normal operations.

fixed-block architecture (FBA). A DASD recording format employing data blocks of fixed size. The blocks are addressed by block number relative to the beginning of the particular file. Contrast with count-key-data (CKD).

G

gigabyte (Gb). 10^9 bytes.

H

head and disk assembly (HDA). A field replaceable unit in a direct access storage device containing the disks and actuators. A 3380 Model AK4 has two HDAs.

head of string. The unit in a DASD string that contains controller functions. For example, a 3380 Model AE4, AK4, or CJ2.

home address (HA). The first field on a CKD track that identifies the track and defines its operational status. The home address is written after the index point on each track.

I

ICKDSF. See Device Support Facilities program.

IDCAMS. A component of Data Facility Product that is also referred to as access method services.

identifier (ID). A sequence of bits or characters that identifies a program, device, controller or system.

IML device. The diskette drive that reads the microcode for the storage control. See diskette drive.

index point. The reference point on a disk surface that determines the start of a track.

initial microcode load (IML). The act of loading microcode.

invalidation. The process of removing records from cache because of a change in status of a subsystem facility or function, or because of an error while processing the cache image of the set of records.

When such a cache image is invalidated, the corresponding records cannot be accessed in cache and the assigned cache space is available for allocation.

I/O device. An addressable input/output unit, such as a direct access storage device, magnetic tape device, or printer.

K

kilobyte (Kb). 1024 bytes.

L

least recently used algorithm (LRU). The algorithm used to identify and make available the cache space that contains the least recently used data.

locate record domain. The part of a channel command chain immediately following a Locate Record command that must follow the restrictions imposed by operations the Locate Record parameters specify. The domain is in effect for the number of records or tracks that the count parameter specifies.

See also domain.

logical DASD subsystem. Two storage directors attached to the same DASD strings together with theie DASD strings. See Figure 88 on page 305, Figure 90 on page 307, and Figure 91 on page 308.

M

maintenance analysis procedure (MAP). A step-by-step procedure for tracing a symptom to the cause of a failure.

media. The disk surface on which data is stored.

megabyte (Mb). 10^6 bytes.

multipath storage director. A storage director in a 3990 Storage Control operating in DLSE support mode. Each multipath storage director in a storage control is associated with two storage paths. All storage paths in a multipath storage director respond to the same range of control unit addresses on a channel. See Figure 90 on page 307 and Figure 91 on page 308.

multitrack operations. A mode of operation in which the storage director advances to the next track when the operation continues past the end of a track.

N

nondisruptive install. Provides for the physical installation of additional Enhanced Subsystem B-units to an existing 4-path DASD string or an additional 4-path DASD string, concurrently with customer operations, providing access to existing data when DASD unit installation activity is occurring. Nondisruptive install uses the quiesce path and resume path functions and is available when only 4-path Enhanced Subsystem DASD are attached to a 3990 Model 2 or Model 3 Storage Control.

nonvolatile storage (NVS). Additional random access electronic storage with a backup battery power source, available with a 3990 Model 3 Storage Control, used to retain data during a power failure. Nonvolatile storage, accessible from all storage directors, stores data during DASD fast write and dual-copy operations.

normal authorization. A channel program executing with normal authorization cannot access the diagnostic or device support tracks.

O

orient. An operational code of the Locate Record command that prepares the storage director to position the DASD to the seek address and sector number parameters.

orientation. A control state within a storage path that indicates the type of area (home address, count, key, or data field) that has just passed under the read/write head of the device.

P

physical ID. A unique designation to identify specific components in a data processing complex.

pinned data. Data that is held in a 3990 Model 3 Storage Control, because of a permanent error condition, until it can be destaged to DASD or until it is explicitly discarded by a host command. Pinned data exists only when using fast write or dual-copy functions.

predictable write. A fast write operation that formats, in cache only, the entire user area of the track and creates a track image. This full-track image is available for later destaging to a DASD.

primary device. One device of a dual-copy volume. All channel commands to the dual-copy logical volume are directed to the primary device. The data on the primary device is duplicated on the secondary device. See also secondary device.

primary track. On a direct access storage device, the original track on which data is stored. See also alternate track.

promotion. The process of moving a track image from a DASD to cache.

Q

quiesce storage path. A function on a 3990 Model 2 or 3 Storage Control in DLSE support mode, configured with only 4-path strings. This function makes one storage path of a multipath storage director unavailable to the processor while assuring that the other path is available for data transfer. This function is initiated by a service representative. Contrast with resume storage path.

R

read hit. When data requested by the read operation are in the cache.

read miss. When data requested by the read operation are not in the cache.

release. A facility that allows other host systems to communicate with the reserved device. Contrast with reserve.

reserve. A facility for devices attached to multiple channel paths. It allows only one host system to communicate with the specified device. Contrast with release.

resume storage path. A function on a 3990 Model 2 or 3 Storage Control in DLSE support mode, configured with only 4-path strings. This function enables a storage path that has been quiesced. This function is initiated by a service representative. Contrast with quiesce storage path.

rotational position sensing (RPS). A function that permits a DASD to reconnect to a block multiplexer channel when a specified sector has been reached. This allows the channel to service other devices on the channel during positional delay.

S

secondary device. One of the devices in a dual-copy logical volume that contains a duplicate of the data on the primary device. Unlike the primary device, a limited subset of channel commands may be directed to the secondary device. See also primary device.

service information message (SIM). A message, generated by the host processor upon receipt of sense information from a 3990 or a 3380 Model CJ2, that contains notification of a need for repair or customer action. The SIM identifies the affected area of the storage control and the effect of the expected service action. A host Error Recovery Procedure (ERP) causes a SIM Alert to be sent to the operator console.

shared control array (SCA). An electronic storage area in a 3990 Storage Control containing the DPS array function and other status information. The shared control array contains status information about its own cluster and the other storage clusters in the storage control subsystem. The information contained in the shared control array is replicated in each storage cluster in that subsystem.

SIM Alert. An operator console message that alerts the operator that an action requiring attention has occurred. The service information message (SIM) can be obtained from the EREP exception report.

simplex state. A volume is in the simplex state if it is not part of a dual-copy logical volume. Terminating a dual-copy logical volume returns the two devices to the simplex state. In this case, there is no longer any capability for either automatic updates of the secondary device or for logging changes, as would be the case in suspended duplex state.

single-frame configuration. In a single-frame configuration, the storage directors of a logical DASD subsystem are located inside one storage control.

single-path storage director. A storage director in a 3990 or 3380 Model CJ2 operating in DLS support mode. Each single-path storage director in the storage cluster is associated with one storage path. A storage path on a single-path storage director responds to a unique control unit address on the channel. A single-path storage director in a 3990 is like a storage director in a 3880. See Figure 89 on page 306.

stage. The process of writing data from a DASD to the cache.

state-change interruption. A combination of bits in the status byte that occurs for a change in the subsystem or the device. For example, a state-change interruption can occur when a volume changes from simplex to duplex. The bit combination is attention, device end, and unit exception. This interruption is sent to all hosts to inform them of the state change.

This was formerly called pack-change interruption.

storage cluster. In the 3990 Storage Control and 3380 Model CJ2, a power and service region containing two independent transfer paths and either one multipath storage director or two single-path storage directors. It is designed so that should a failure or maintenance action occur, it will be independent of the other storage cluster in a 3990 Model 2 or Model 3 Storage Control. The 3990 Model 1 and the 3380 Model CJ2 each have a

single storage cluster; the 3990 Model 2 and Model 3 each have two storage clusters.

In the 3990 Model 3, cache and nonvolatile storage are shared by the storage paths, but are logically and physically separate from the storage clusters. See also storage director, single-path storage director, and multipath storage director.

storage control. The component in a DASD subsystem that connects the DASD to the host channels. It performs channel commands and controls the DASD devices. For example, the 3990 Model 2 and Model 3 are storage controls.

storage director. In a 3990 storage control, a logical entity consisting of one or more physical storage paths in the same storage cluster. In a 3880, a storage director is equivalent to a storage path. See also storage path, single-path storage director, and multipath storage director.

storage director ID. For 3880 Storage Control configurations, an 8-bit designation that uniquely identifies the storage director regardless of its selection address. It identifies to the service representative, by means of EREP, a failing subsystem component (storage director) without having to translate a selection address (which may have little relation to a physical address) to a physical component. The storage director ID is the number shown on the operator panels of 3880s and the attached DASD units.

storage facility. See 4-path string.

storage management subsystem (SMS). An operating environment that helps automate and centralize the management of storage. To manage storage, SMS provides the storage administrator with control over data class, storage class, management class, storage group and automatic class selection routine definitions.

storage path. The hardware within the 3990 Storage Control that transfers data between the DASD and a channel. See also storage director.

storage subsystem. One or more storage controls and their attached storage devices.

string. A series of connected DASD units sharing one or more controllers (or heads of string). For example, a 3380 Model AE4 with the attached B-units is one string.

string address. The 1-bit address used by the storage control to direct commands to the correct 3380 AJ4 and/or AK4 DASD string on the CTL-I. See also controller address.

string ID. An 8-bit identifier that uniquely identifies the physical string regardless of the selection address. It identifies to the service representative, by means of EREP, a failing subsystem component (controller or device) without having to translate a selection address (which may have little relation to a physical address) to a physical component. The string ID is the number shown on the operator panel of the 3380 Model AJ4 or AK4. See also controller ID.

substring. In a 4-path Enhanced Subsystem DASD configuration, one of the two A-units and the physically adjacent B-units (as many as three B-units).

subsystem identifier (SSID). In a 3990 Storage Control configuration, a number that identifies the physical components of a logical DASD subsystem. This number is set by the service representative at time of installation, and is included in the vital product data in the support facility. This number is identified on the 3380 Enhanced Subsystem models and 3990 operator panels.

subsystem storage. A term used when describing cache. See cache.

support facility (SF). A component of each 3990 and 3380 Model CJ2 storage cluster that provides initial microcode load, error logging, maintenance panel, MAPs, and microdiagnostic functions for that cluster.

suspended duplex state. When only one of the devices in a dual-copy logical volume is being updated because of either a permanent error condition or an authorized user command. All writes to the remaining functional device are logged. This allows for automatic resynchronization of both volumes when the dual-copy logical volume is reset to the active duplex state.

system-managed storage. An approach to storage management in which the system determines data placement and an automatic data manager handles data backup, movement, space and security.

U

unit address. The last two hexadecimal digits of a DAS device address. This identifies the storage control and DAS string, controller, and device to the channel subsystem. Often used interchangeably with control unit address and device address in System/370 mode.

V

vital product data (VPD). Nonvolatile data that includes configuration data, machine serial number, EC level, and machine features. It is maintained by the 3990 support facility.

volume. The DASD space accessible by a single actuator. A 3380 Model AK4 contains four volumes, each with 1.89 gigabytes of space.

W

write hit. When data requested by the write operation are in the cache.

write miss. When data requested by the write operation are not in the cache.

Numeric

2-path string. A series of physically connected DASD units in which the head of string unit provides two data transfer paths that can operate simultaneously.

4-path string. A series of physically connected DASD units in which the heads of string provide four data transfer paths that can operate simultaneously. A 4-path string requires two 3380 Enhanced Subsystem model A-units.

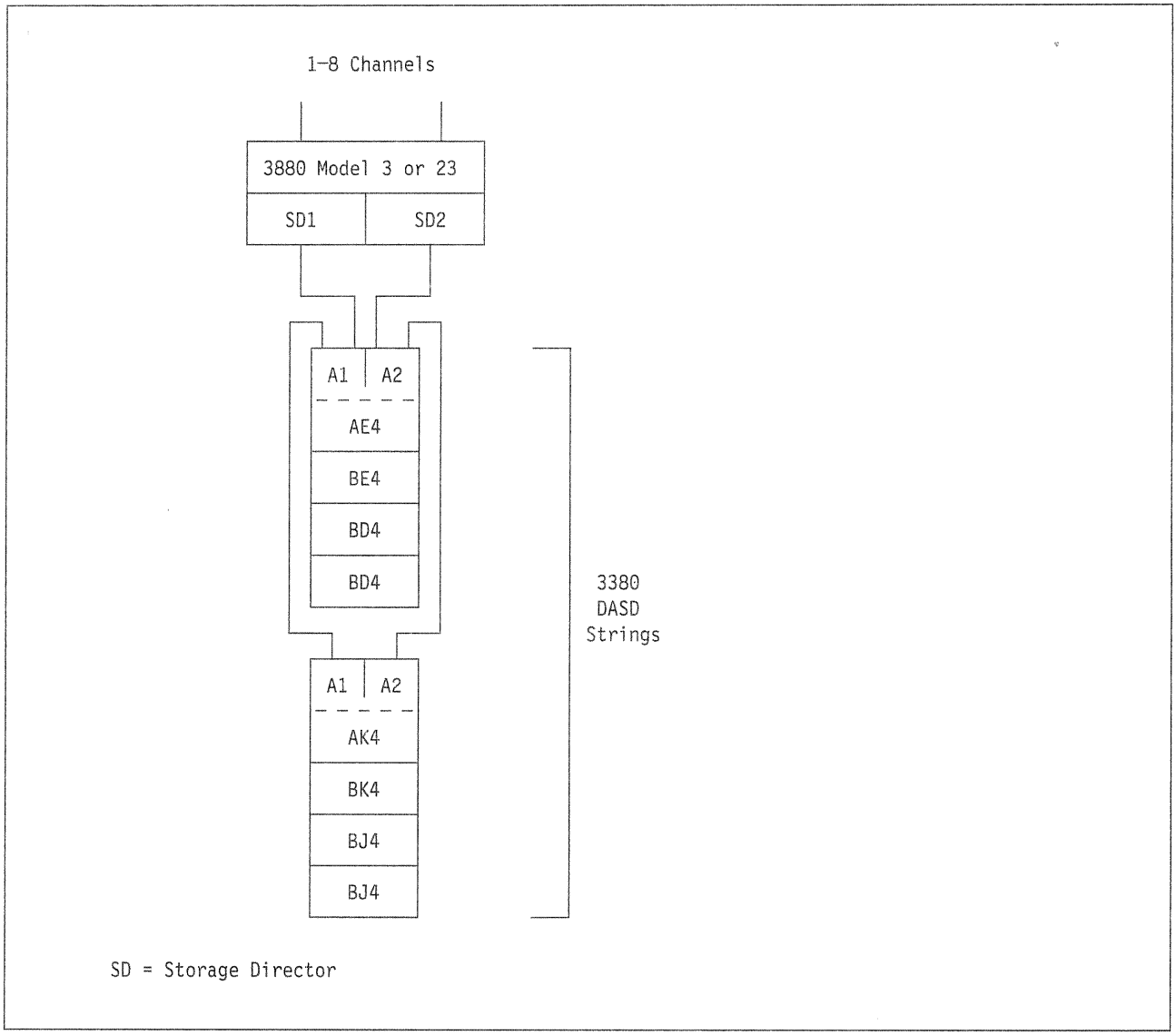

Figure 88. Example of 3380 Model AE4 and AK4 2-Path Strings Attached to a 3880. Two 3380 strings sequentially connected to both storage directors of a 3880 Model 3 or 23 with appropriate MESs installed. In this example, upper string contains a 3380 Model AE4 controller and a mixture of BD4 and BE4 units. The lower string contains a Model AK4 controller, and a mixture of BJ4 and BK4 units. In a 3880, a storage director performs the same functions as a storage path.

This example shows one logical DASD subsystem.

Definitions of the following glossary terms refer to this illustration:

- DLS
- Logical DASD subsystem.

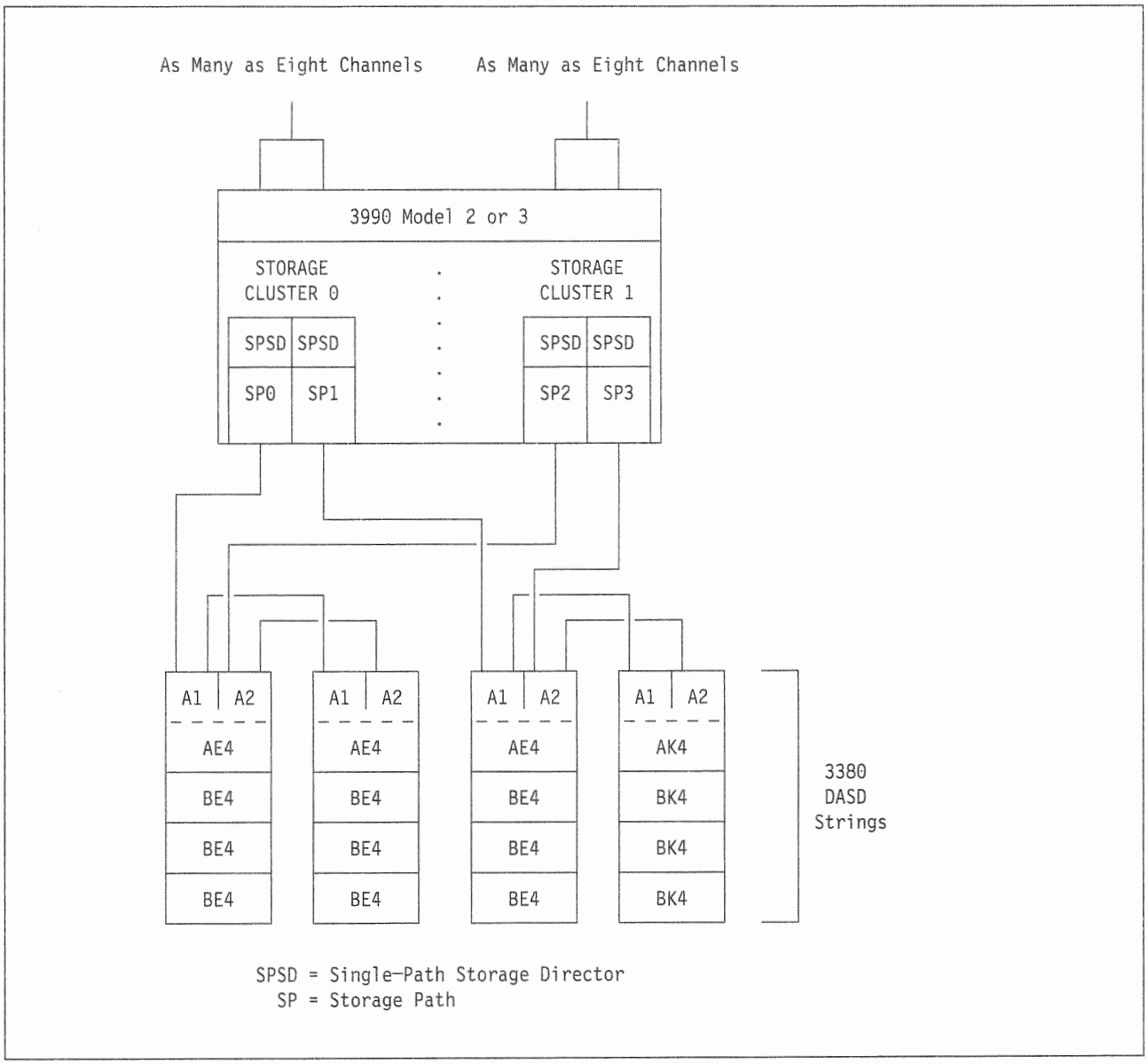

Figure 89. Example of 3380 2-Path Strings Attached to a 3990 Model 2 or 3 in DLS Support Mode. This example shows two logical DASD subsystems. Storage Paths 0 and 2 and the attached DASD comprise one subsystem, with a unique subsystem ID, while Storage Paths 1 and 3 and the attached DASD comprise a second subsystem with a unique subsystem ID. Compare this 2-path Enhanced Subsystem string with 4-path Enhanced Subsystem strings shown in Figure 90.

Definitions of the following glossary terms refer to this illustration:

- DLS
- DLS support mode
- Single-path storage director.

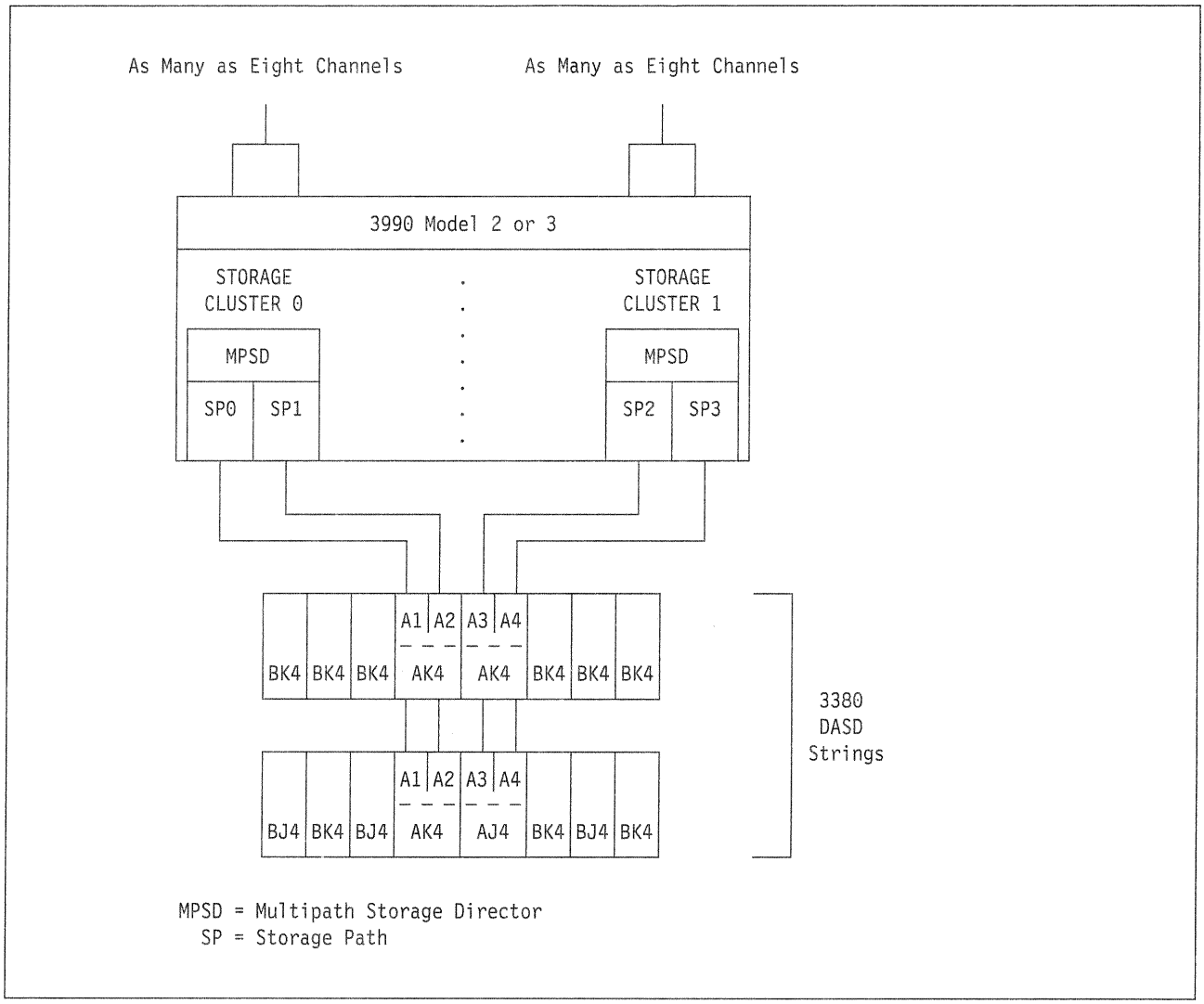

Figure 90. Example of 3380 Enhanced Subsystem Model 4-Path Strings Attached to a 3990 in DLSE Support Mode. Two 3380 4-path strings sequentially connected to the multipath storage directors in the same 3990 Model 2 or Model 3.

This example shows one logical DASD subsystem.

Definitions of the following glossary terms refer to this illustration:

- DLSE
- DLSE support mode
- Logical DASD subsystem
- Multipath storage director.

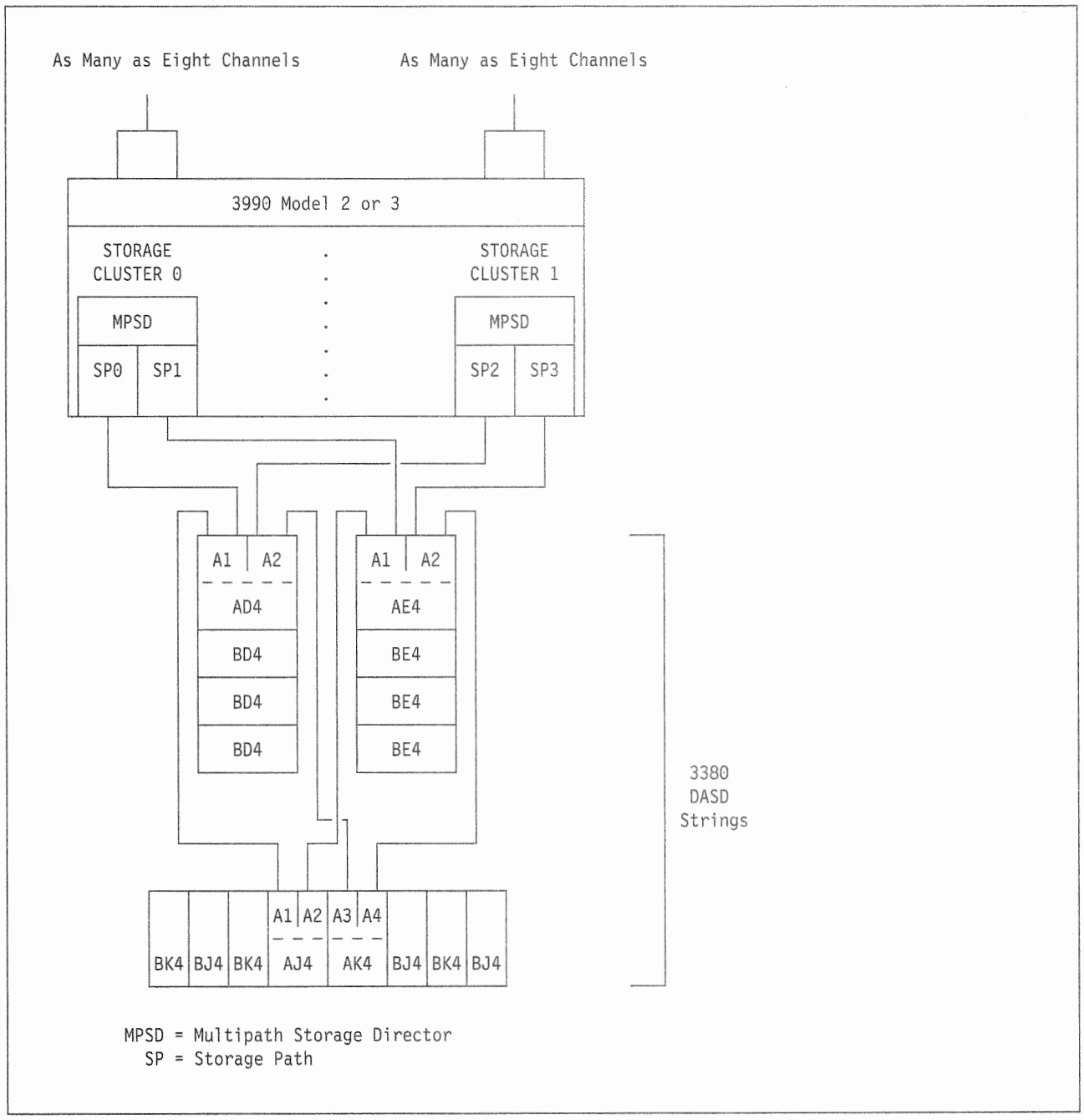

Figure 91. Example of 3380 2-Path and 4-Path Strings Attached to a 3990 in DLSE Support Mode. Two 3380 2-path strings and one 4-path string, sequentially connected to the multipath storage directors in the same 3990 Model 2 or 3.

This example shows one logical DASD subsystem.

Definitions of the following glossary terms refer to this illustration:

- DLSE
- DLSE support mode
- Logical DASD subsystem
- Multipath storage director.

Bibliography

The manuals listed in the table below contain more detailed information on the subjects discussed in this book. For each manual, the table shows the short and expanded title with the manual's order number, and a short description of its contents.

For information on how to order these manuals, contact your local IBM branch office.

Short Title	Full Title	Order Number	Contents
Storage Subsystem Hardware Manuals			
IBM 3990 Storage Control Planning, Installation, and Storage Administration Guide	*IBM 3990 Storage Control Planning, Installation, and Storage Administration Guide*	GA32-0100	Detailed information on installation and use of the 3990 storage control
IBM 3380 Direct Access Storage Direct Channel Attach Model CJ2 Introduction and Reference	*IBM 3380 Direct Access Storage Direct Channel Attach Model CJ2 Introduction and Reference*	GC26-4497	Overview of functions and reference information for 3380 Model CJ2
IBM 3990 Storage Control Introduction	*IBM 3990 Storage Control Introduction*	GA32-0098	Overview of 3990 storage control unit functions
IBM 3990 Storage Control Reference	*IBM 3990 Storage Control Reference*	GA32-0099	Information on the 3990 channel interface (channel commands and sense bytes)
3380 Direct Access Storage Reference Summary	*3380 Direct Access Storage Reference Summary*	GX26-1678	Summary card containing 3380 device characteristics
IBM 3380 Direct Access Storage Introduction	*IBM 3380 Direct Access Storage Introduction*	GC26-4491	Overview of all 3380 models
Maintaining IBM Storage Subsystem Media	*Maintaining IBM Storage Subsystem Media*	GC26-4495	Description of DASD media maintenance and error handling
Storage Subsystem Library Master Index	*Storage Subsystem Library Master Index*	GC26-4496	Index to information in 3380 and 3990 manuals
Using the IBM 3380 Direct Access Storage in a VM Environment	*Using the IBM 3380 Direct Access Storage in a VM Environment*	GC26-4493	Discussion of 3380 use under VM
Using the IBM 3380 Direct Access Storage in a VSE Environment	*Using the IBM 3380 Direct Access Storage in a VSE Environment*	GC26-4494	Discussion of 3380 use under VSE
3380 DASD Features, Installation and Conversion	*3380 DASD Features, Installation and Conversion*	GG22-9308	Describes standard 3380 hardware features, how to prepare for installation of 3380 and migration of data
IBM 3031, 3032, 3033 Processor Complex Channel Configuration Guidelines	*IBM 3031, 3032, 3033 Processor Complex Channel Configuration Guidelines*	GG22-9020	Provides guidance on configuring 303X processor channels
Introduction to IBM Direct Access Storage Devices	*Introduction to IBM Direct Access Storage Devices*	SR20-4738	Textbook describing large IBM early DASD and data storage theory and methods
Using the IBM 3380 Direct Access Storage in an MVS Environment	*Using the IBM 3380 Direct Access Storage in an MVS Environment*	GC26-4492	Discussion of 3380 use under MVS/XA and MVS/370
Early Experiences with 3880-23	*Early Experiences with 3880-23*	GG66-0200	Describes initial experiences with cache
IBM 3880 Storage Control Model 13 and Model 23 New Perspectives and Experiences	*IBM 3880 Storage Control Model 13 and Model 23 New Perspectives and Experiences*	GD26-7000	Describes early experiences and uses of cache storage directors

Short Title	Full Title	Order Number	Contents
IBM International Systems Centers/Washington Systems Center Guide to the IBM 3880 Storage Control Model 23	*IBM International Systems Centers/Washington Systems Center Guide to the IBM 3880 Storage Control Model 23*	GG24-1642	Describes usage of the 3880 Model 23
IBM 3880 Storage Control Models 1, 2, 3, and 4 Description	*IBM 3880 Storage Control Models 1, 2, 3, and 4 Description Manual*	GA26-1661	Overview of 3880 Models 1, 2, 3, and 4 functions
IBM 3880 Storage Control Model 13 Description	*IBM 3880 Storage Control Model 13 Description*	GA32-0067	Reference manual for 3880 Model 13 functions
IBM 3880 Storage Control Model 23 Description	*IBM 3880 Storage Control Model 23 Description*	GA32-0083	Reference manual for 3880 Model 23 functions
IBM 3880 Storage Control Model 23 Installation and Administration Guide	*IBM 3880 Storage Control Model 23 Installation and Administration Guide*	GA32-0085	Describes how to install and use the 3880 Model 23 effectively
IBM 3880 Storage Control Model 23 Introduction	*IBM 3880 Storage Control Model 23 Introduction*	GA32-0082	Overview of 3880 Model 23 functions
IBM 3880 Storage Control Model 23 with RPQ #8B0035 Description	*IBM 3880 Storage Control Model 23 with RPQ #8B0035 Description*	GA32-0087	Reference manual for 3880 Model 23 functions
Introduction to IBM 3880 Storage Control Model 23 with RPQ #8B0035	*Introduction to IBM 3880 Storage Control Model 23 with RPQ #8B0035*	GA32-0086	Overview of 3880 Model 23 functions
EREP User Guide and Reference	*Environmental Record Editing and Printing (EREP) User's Guide and Reference*	GC28-1378	Description of EREP functions and commands for DASD media reporting
Storage Management Library			
ICKDSF Primer	*Device Support Facilities: Primer for the User of IBM 3380 Direct Access Storage*	GC26-4498	Describes how to use ICKDSF with the 3380
ICKDSF User's Guide and Reference	*Device Support Facilities User's Guide and Reference*	GC35-0033	Description of ICKDSF functions and commands for DASD initialization and maintenance
MVS/XA SML: Configuring Storage Subsystems	*MVS/Extended Architecture Storage Management Library: Configuring Storage Subsystems*	GC26-4262	Describes evaluating hardware configurations, developing capacity plans, and performance, availability and space utilization considerations
MVS/XA SML: Managing Data Sets	*MVS/Extended Architecture Storage Management Library: Managing Data Sets*	GC26-4263	Describes managing data sets, catalogs and control data sets. establishing and enforcing data set policy, and data set security
MVS/XA SML: Managing Storage Pools	*MVS/Extended Architecture Storage Management Library: Managing Storage Pools*	GC26-4264	Describes storage requirements for groups of data sets, designing storage pools, making transition to pooled storage, and maintaining and monitoring storage pools
Physical Planning and Reference Information			
IBM System/360, System/370, and 4300 Processors Input/Output Equipment Installation Manual—Physical Planning	*IBM System/360, System/370, and 4300 Processors Input/Output Equipment Installation Manual—Physical Planning*	GC22-7064	Description of physical planning for I/O hardware
IBM System/360, System/370, and 4300 Processors Installation Reference - Physical Planning for Installation Manual—Physical Planning	*IBM System/360, System/370, and 4300 Processors Installation Reference - Physical Planning for Installation Manual—Physical Planning*	GC22-7069	Description of physical planning for I/O hardware

Short Title	Full Title	Order Number	Contents
9370 Information System Installation Manual – Physical Planning	*9370 Information System Installation Manual – Physical Planning*	GA24-4031	Contains physical planning information for the 9370 family of processors
IOCP User's Guide and Reference	*Input/Output Configuration Program User's Guide and Reference*	GC28-1027	Shows how to define the I/O configuration data required by the processor complex to control I/O requests, describing the MVS version, the VM version, and the standalone version of IOCP
EREP User's Guide and Reference	*Environmental Record and Editing Printing Program User's Guide and Reference*	GC28-1378	Contains introductory and explanatory information about EREP, detailed process information, and reference information.
Installation	*VM/SP Installation Guide*	SC24-5237	Discussion of VM/SP installation tools, including the DISKMAP exec
	VM/SP HPO Installation Guide	SC38-0107	Discussion of VM/SP HPO installation tools, including the DISKMAP exec
	VM/XA SF Installation, Administration, and Service	GC19-6217	Discussion of VM/XA SF installation tools, including the DISKMAP exec
MVS/370 Planning and Reference Information			
Access Method Services Reference	*MVS/370 Integrated Catalog Administration: Access Method Services Reference*	GC26-4051	Describes the access method services commands used with VSAM and integrated catalog facility catalogs
Access Method Services Reference	*MVS/370 VSAM Catalog Administration: Access Method Services Reference*	GC26-4059	Describes the access method services commands used with VSAM
Cache Device Administration	*Cache Device Administration*	GC35-0101	Describes the AMS cache utility commands necessary to manage cache and to obtain information about cache status and performance
MVS Initialization and Tuning Guide	*OS/VS2 MVS System Programming Library: Initialization and Tuning Guide*	GC28-1029	Describes how to initialize the system and improve system performance, includes information on GTF
MVS/370 Data Administration Guide	*MVS/370 Data Administration Guide*	GC26-4058	Contains information on using access methods to do input and output
MVS/370 Data Administration Macro Instruction Reference	*MVS/370 Data Administration: Macro Instruction Reference*	GC26-4057	Describes how to use macros to do input and output
MVS/370 Data Administration: Utilities	*MVS/370 Data Administration: Utilities*	GC26-4065	Describes how to use IEHLIST to maintain VTOC, IEHMOVE to maintain OS CVOLS, and IEHPROM to protect data sets
MVS/370 JCL User's Guide	*MVS/370 JCL User's Guide*	GC28-1349	Describes syntax of JCL statements, JES2 and JES3 control statements
MVS/370 System: Data Administration	*MVS/370 System: Data Administration*	GC26-4056	Describes MVS/370 DFP, and how to modify and extend the data management capabilities of the operating system
MVS/370 System Generation Reference	*MVS/370 System Generation Reference*	GC26-4063	Describes how to do a sysgen, iogen, or edtgen
MVS/370 VSAM Administration: Macro Instruction Reference	*MVS/370 VSAM Administration: Macro Instruction Reference*	GC26-4074	Describes using VSAM macro instructions for VSAM data sets
MVS/SP Version 1 General Information Manual	*MVS/System Product Version 1 General Information Manual*	GC28-1025	Contains overview and planning information for JES3 and JES2 for MVS/370

Short Title	Full Title	Order Number	Contents
MVS/SP Version 1 Release 3 Installation Considerations	*MVS/System Product Version 1 Release 3 Installation Considerations*	GG22-9250	Installation planning considerations for MVS/370
Operator's Library: OS/VS2 MVS System Commands	*Operator's Library: OS/VS2 MVS System Commands*	GC28-1031	Describes syntax and use of MVS/370 commands
MVS/XA Planning and Reference Information			
Cache Device Administration	*Cache Device Administration*	GC35-0101	Describes the AMS cache utility commands necessary to manage cache and to obtain information about cache status and performance
An MVS Tuning Perspective	*An MVS Tuning Perspective*	GG22-9023	Describes the effects of tuning an MVS system
MVS/XA Catalog Administration Guide	*MVS Extended Architecture Catalog Administration Guide*	GC26-4046	Describes how to use the integrated catalog facility
MVS/XA Data Administration Guide	*MVS Extended Architecture Data Administration Guide*	GC26-4140	Describes how to use access methods (except VSAM) to process data sets
MVS/XA Data Administration: Macro Instruction Reference	*MVS Extended Architecture Data Administration: Macro Instruction Reference*	GC26-4014	Describes how to code macro instructions for access methods
MVS/XA Installation: System Generation	*MVS/Extended Architecture Installation: System Generation*	GC26-4009	Describes how to do a complete sysgen, iogen, or edtgen in MVS/XA
MVS/XA Integrated Catalog Administration: Access Method Services Reference	*MVS Extended Architecture Integrated Catalog Administration: Access Method Services Reference*	GC26-4135	Describes access method services commands used to manipulate integrated catalog facility catalogs and VSAM data sets
MVS/XA I/O Performance Considerations	*MVS/XA I/O Performance Considerations*	GG22-9346	Describes the effect of the MVS/XA I/O subsystem on device performance. Tuning considerations are discussed
MVS/XA JCL	*MVS/Extended Architecture Job Control Language (JCL)*	GC28-1148	Describes syntax and use of JCL in MVS/XA
MVS/XA Message Library: System Messages Volume 1	*MVS/Extended Architecture Message Library: System Messages Volume 1*	GC28-1376	Lists MVS/XA system messages and responses
MVS/XA Message Library: System Messages Volume 2	*MVS/Extended Architecture Message Library: System Messages Volume 2*	GC28-1377	Lists MVS/XA system messages and responses
MVS/XA: MVS Configuration Program Guide and Reference	*MVS/Extended Architecture MVS Configuration Program Guide and Reference*	GC28-1335	Describes use of MVSCP to define the I/O configuration to MVS/XA
MVS/XA Operations: System Commands	*MVS/Extended Architecture Operations: System Commands*	GC28-1206	Describes syntax and use of MVS/XA system commands
MVS/XA System – Data Administration	*MVS Extended Architecture System – Data Administration*	GC26-4149	Overview of IBM access methods
MVS/XA System Programming Library: Service Aids	*MVS/Extended Architecture System Programming Library: Service Aids*	GC28-1159	Describes how to use GTF, LIST, PRDMP, SADMP, and SPZAP
MVS/XA VSAM Administration Guide	*MVS Extended Architecture VSAM Administration Guide*	GC26-4015	Describes how to create VSAM data sets
MVS/XA VSAM Catalog Administration: Access Method Services Reference	*MVS Extended Architecture VSAM Catalog Administration: Access Method Services Reference*	GC26-4136	Describes access method services commands used to manipulate VSAM data sets
MVS/ESA Planning and Reference Information			

Short Title	Full Title	Order Number	Contents
Cache Device Administration	*Cache Device Administration*	GC35-0101	Describes the AMS cache utility commands necessary to manage cache and to obtain information about cache status and performance
Initialization and Tuning	*MVS/ESA System Programming Library: Initialization and Tuning*	GG28-1828	Describes the effects of tuning an MVS/ESA system and how to define these values.
Catalog Administration Guide	*MVS/ESA Catalog Administration Guide*	SC26-4052	Describes how to use the integrated catalog facility
Data Administration Guide	*MVS/ESA Data Administration Guide*	SC26-4505	Describes how to use access methods (except VSAM) to process data sets
Data Administration: Macro Instruction Reference	*MVS/ESA Data Administration: Macro Instruction Reference*	SC26-4506	Describes how to code macro instructions for access methods
System Generation	*MVS/ESA System Generation*	GC28-1825	Describes how to do a complete sysgen MVS/ESA
Access Method Services Reference	*MVS/ESA Integrated Catalog Administration: Access Method Services Reference*	SC26-4500	Describes access method services commands used to manipulate integrated catalog facility catalogs and VSAM data sets
JCL Reference	*MVS/ESA Job Control Language Reference*	GC28-1829	Describes the syntax of JCL
JCL User's Guide	*MVS/ESA Job Control Language User's Guide*	GC28-1830	Describes the use of JCL
System Messages Volume 1	*MVS/ESA Message Library: System Messages Volume 1*	GC28-1812	Lists MVS/ESA system messages and responses
System Messages Volume 2	*MVS/ESA System Messages Volume 2*	GC28-1813	Lists MVS/ESA system messages and responses
Routing and Descriptor Codes	*MVS/ESA Message Library: Routing and Descriptor Codes*	GC28-1816	Lists MVS/ESA system message routing and descriptor codes
MVS Configuration Program Guide and Reference	*MVS/ESA MVS Configuration Program Guide and Reference*	GC28-1817	Describes use of MVSCP to define the I/O configuration to MVS/ESA
System Commands	*MVS/ESA Operations: System Commands*	GC28-1826	Describes syntax and use of MVS/ESA system commands
MVS/ESA System — Data Administration	*MVS/ESA System — Data Administration*	SC26-4515	Overview of IBM access methods available in an MVS/ESA system
Service Aids	*MVS/ESA System Programming Library: Service Aids*	GC28-1844	Describes how to use GTF, LIST, PRDMP, SADMP, and SPZAP
Basics of Problem Determination	*MVS/ESA Basics of Problem Determination*	GC28-1839	Describes the methods for problem determination an an MVS/ESA environment
VSAM Administration Guide	*MVS/ESA VSAM Administration Guide*	SC26-4518	Describes how to create VSAM data sets
Access Method Services Reference	*MVS/ESA VSAM Catalog Administration: Access Method Services Reference*	SC26-4501	Describes access method services commands used to manipulate VSAM data sets
DFP: General Information	*MVS/ESA Data Facility Product Version 3: General Information*	GC26-4507	Overview of capabilities and requirements of MVS/DFP
DFP Planning Guide	*MVS/ESA Data Facility Product Version 3: Planning Guide*	SC26-4513	Describes installation of DFP
DFP: Diagnosis Guide	*MVS/ESA Data Facility Product Version 3: Diagnosis Guide*	LY27-0550	Used to develop the keyword string for reporting program failures
DFP: Diagnosis Reference	*MVS/ESA Data Facility Product Version 3: Diagnosis Reference*	LY27-9530	Used as references for diagnosing program failures

Short Title	Full Title	Order Number	Contents
DFP: Directory of programming interfaces for customers	*MVS/ESA Data Facility Product Version 3: Directory of Programming Interfaces for Customers*	GC26-4414	References programming interfaces documentation
Performance, Availability, and Tuning Information			
Component Failure Impact Analysis—An Availability Management Technique	*Component Failure Impact Analysis—An Availability Management Technique*	GC20-1865	Planning for hardware availability through configuration
MVS/XA: JES3 User Modifications and Macros	*MVS/Extended Architecture: JES3 User Modifications and Macros*	SC23-0060	Describes tailoring JES3 exits and macros
Cache RMF Program Description and Operation	*Cache RMF Reporter Program Description/Operation*	SH20-6295	Provides detailed information on Cache RMF Reporter
MVS/XA RMF Reference and User's Guide	*MVS/XA Resource Measurement Facility Reference and User's Guide*	LC28-1138	Provides detailed information to operate RMF under MVS/XA
MVS/XA SMF	*MVS Extended Architecture System Management Facilities*	GC28-1153	Describes how to plan for, install and use SMF to manage the MVS/XA system
OS/VS2 MVS Performance Notebook	*OS/VS2 MVS Performance Notebook*	GC28-0886	Describes tuning your system to meet performance expectations and optimizing use of your system
OS/VS2 MVS Planning: Global Resource Serialization	*OS/VS2 MVS Planning: Global Resource Serialization*	GC28-1062	Contains information on how to serialize access to data sets on shared DASD volumes
RACF General Information Manual	*Resource Access Control Facility (RACF) General Information Manual*	GC28-0722	Provides overview and planning information for the RACF program
OS/VS2 MVS RMF Reference and User's Guide, Version 2	*OS/VS2 MVS RMF Reference and User's Guide, Version 2*	SC28-0922	Provides detailed information to operate RMF under MVS/370
OS/VS2 System Programming Library System Management Facilities	*OS/VS2 System Programming Library System Management Facilities*	GC28-1030	Describes how to plan for, install and use SMF to manage the MVS/370 system
OS/VS2 MVS RMF, Version 2, General Information	*OS/VS2 MVS Resource Measurement Facility, Version 2, General Information*	GC28-0921	Describes capabilities, functions, and usage of RMF (Version 2 runs on an MVS/370 system)
RMF, Version 3, General Information	*Resource Measurement Facility, Version 3, General Information*	GC28-1115	Describes capabilities, functions, and usage of RMF (Version 3 runs on an MVS/XA system)
SLR User's Guide	*Service Level Reporter User's Guide*	SH19-6215	Describes how generate reports using SLR
SLR, Version 2, General Information	*Service Level Reporter, Version 2, General Information*	GH19-6213	Overview of SLR functions
SPL: JES2 Installation, Initialization, and Tuning	*System Programming Library: JES2 Installation, Initialization, and Tuning*	SC23-0046	Describes requirements for and activities of JES2 installation, initialization, and tuning
SPL: JES3 Installation, Initialization, and Tuning	*System Programming Library: JES3 Installation, Initialization, and Tuning*	SC23-0041	Describes requirements for and activities of JES3 installation, initialization, and tuning
DATABASE 2 (DB2) Information			
DB2 Release 2 Data Portability	*DB2 Release 2 Data Portability*	WSCF-8642	Describes moving DB2 data sets and volumes between DASD or systems
IBM DB2 General Information	*IBM DATABASE 2 General Information*	GC26-4073	Overview of DB2 operation and functions

Short Title	Full Title	Order Number	Contents
IBM DB2 Installation	*IBM DATABASE 2 Installation*	SC26-4084	Describes installation requirements of DB2
IBM DB2 System Planning and Administration Guide	*IBM DATABASE 2 System Planning and Administration Guide*	SC26-4085	Describes planning activities for installing or migrating to DB2 Release 2 and managing system resources once installed
Data Facility Data Set Services (DFDSS) Information			
DFDSS: General Information (Version 2)	*Data Facility Data Set Services: General Information* (Version 2)	GC26-4123	Overview of capabilities and requirements
DFDSS: User's Guide and Reference (Version 2)	*Data Facility Data Set Services: User's Guide and Reference* (Version 2)	SC26-4125	Describes syntax and usage of DFDSS commands
Data Facility SORT (DFSORT) Information			
DFSORT General Information	*DFSORT General Information*	GC33-4033	Contains introductory material for planners, system support people, managers, or programmers
DFSORT Application Programming Guide	*DFSORT Application Programming Guide*	GC33-4035	Provides detailed programming information to enable programmers to prepare sort, merge or copy applications
Data Facility Hierarchical Storage Manager (DFHSM) Information			
DFHSM: Installation and Customization Guide	*Data Facility Hierarchical Storage Manager: Installation and Customization Guide*	SH35-0084	Describes how to install and tailor DFHSM to your needs
DFHSM: System Programmer's Guide	*Data Facility Hierarchical Storage Manager: System Programmer's Guide*	GH35-0085	Describes the concepts of DFHSM
DFHSM: System Programmer's Reference	*Data Facility Hierarchical Storage Manager: System Programmer's Reference*	GH35-0083	Describes and explains how to use the DFHSM system programmer, space manager, and operator commands
Hierarchical Storage Manager (HSM) Information			
HSM Release 3 Installation Guide	*Hierarchical Storage Manager Release 3 Installation Guide*	GG22-9254	Describes requirements for and activities of HSM installation
OS/VS MVS HSM: General Information	*OS/VS MVS Hierarchical Storage Manager: General Information*	GH35-0007	Overview of capabilities and requirements
OS/VS2 MVS HSM: User's Guide	*OS/VS2 MVS Hierarchical Storage Manager: User's Guide*	SH35-0024	Describes syntax and usage of HSM commands
Data Facility Product (DFP) Information			
MVS/370 DFP: General Information	*MVS/370 Data Facility Product: General Information*	GC26-4050	Overview of capabilities and requirements of MVS/370 DFP
MVS/370 DFP: Planning Guide	*MVS/370 Data Facility Product: Planning Guide*	GC26-4052	Describes installation of DFP, conversion to integrated catalogs, and conversion to indexed VTOCs in MVS/370
MVS/XA DFP Version 2: General Information	*MVS Extended Architecture Data Facility Product Version 2: General Information*	GC26-4142	Overview of capabilities and requirements of MVS/XA DFP
MVS/XA DFP Version 2: Planning Guide	*MVS Extended Architecture Data Facility Product Version 2: Planning Guide*	GC26-4147	Describes installation of DFP, conversion to integrated catalogs, and conversion to indexed VTOCs in MVS/XA

Short Title	Full Title	Order Number	Contents
MVS/XA DFP Version 2: Diagnosis Guide	*MVS Extended Architecture Data Facility Product Version 2: Diagnosis Guide*	LY27-9521	Used to develop the keyword string for reporting program failures.
MVS/XA DFP Version 2: Diagnosis Reference	*MVS Extended Architecture Data Facility Product Version 2: Diagnosis Reference*	LY27-9530	Used as reference for diagnosing program failures.
IMS/VS Information			
IMS/VS Version 1, Data Base Administration Guide	*IMS/VS Version 1, Data Base Administration Guide*	SH20-9025	Describes design, implementation and maintenance of IMS data base
IMS/VS Version 1, General Information Manual	*IMS/VS Version 1, General Information Manual*	GH20-1260	Overview of capabilities and requirements
IMS/VS Version 1, Utilities Reference Manual	*IMS/VS Version 1, Utilities Reference Manual*	SH26-4173	Provides detailed information on utilities and how to run them
VM Reference Information			
Alternate Pathing under VM	*Alternate Pathing under VM*	GG22-9381	Description of how VM/SP uses alternate paths in the storage subsystem
CMS Reference	*VM/SP CMS Command and Macro Reference* (Release 4)	SC19-6209	Discussion of CMS commands, including FORMAT and COPYFILE for the VM/SP and VM/SP HPO environments
	VM/SP CMS Command Reference (Release 5)		
	VM/XA SF CMS Command and Macro Reference	GC19-6231	Discussion of CMS commands, including FORMAT and COPYFILE
Comparison of IBM 3380s and IBM 3350s Used for VM/CMS Minidisks	*Comparison of IBM 3380s and IBM 3350s Used for VM/CMS Minidisks.*	GG22-9347	Evaluates 3380 disk capacity and performance in VM/SP HPO
CP for System Programming	*VM/SP CP for System Programming* (Release 5)	SC24-5285	Discussion of system programming tasks and commands, including CP INDICATE, SYSOWN, MONITOR
	VM/SP HPO CP for System Programming (Release 5)	SC19-6224	Discussion of system programming tasks and commands, including CP INDICATE, SYSOWN, MONITOR
CP Reference	*VM/SP CP Command Reference*	SC19-6211	Discussion of CP commands for both general and non-general users
	VM/SP HPO CP Command Reference	SC19-6227	Discussion of CP commands for both general and non-general users
	VM/XA SF CP Command and Diagnosis Reference	GC19-6215	Discussion of CP commands for both general and non-general users
DASD Sharing under VM	*DASD Sharing under VM*	GG22-9380	Description of how DASD can be shared among guest systems
VM/SP AJ4,BJ4,AK4,BK4 User's Guide	*VM/SP IBM 3380 AJ4/BJ4/AK4/BK4 User's Guide*	GC24-5371	Contains general description of VM/SP software support (within CP and CMS) for the Enhanced Subsystem 3380s.
3380 VM Performance Analysis	*IBM 3380 Extended Capability DASD VM Benchmark Performance Analysis*	GG66-0262	Helps plan migration from 3380 standard models to 3380 extended capability models, providing migration execs
System Operations and Planning Information			
Operations	*VM/SP Operator's Guide*	SC19-6202	Discussion of VM/SP operator commands and facilities, including DDR, MONITOR, VARY, and DMKFMT
	VM/SP HPO Operator's Guide (Release 4.2)	ST00-1898	Discussion of VM/SP HPO operator commands and facilities, including DDR, MONITOR, VARY, and DMKFMT

Short Title	Full Title	Order Number	Contents
	VM/XA SF Real System Operation	GC23-0139	Discussion of VM/XA SF operator commands and facilities, including DDR, MONITOR, VARY, and DMKFMT
	VM/XA SF Virtual Machine Operation	GC23-0138	Discussion of VM/XA SF operator commands and facilities
	VM/SP HPO Release 5 CP Support for the IBM 3990 Storage Control Model 3	*GC23-0430*	*Describes the support of VM/SP HPO Release 5 for the 3990 Model 3.*
TPF2 General Information Manual	Transaction Processing Facility Version 2 General Information Manual	*GH20-6200*	*Provides on overview of TPF with a description of supported hardware*
Planning	VM/SP Planning Guide and Reference	*SC19-6201*	*Discussion of VM/SP hardware and software planning, system design, and system definition*
	VM/SP HPO Planning Guide and Reference	*SC19-6223*	*Discussion of VM/SP HPO hardware and software planning, system design, and system definition*
	VM/XA SF Virtual Machine Planning	*SC23-0167*	*Discussion of VM/XA SF hardware and software planning, system design, and system definition*
	VM/XA Systems Facility Planning Guide	*GG24-1709*	*Provides advanced installation and planning information for VM/XA SF, and includes planning information on MVS/370, MVS/XA, VSE and VM guests under VM/XA SF*
VM Performance and Monitor Information			
VM/RTM Program Description/Operations Manual	VM Real Time Monitor Program Description/Operations Manual	*SH20-2337*	*Description of RTM functions, commands, and reports for performance monitoring*
RTM/SF Program Description/Operations Manual	VM/XA Realtime Monitor/Systems Facility Program Description/Operations Manual	*SH26-7000*	*Description of RTM/SF functions, commands, and reports for performance monitoring*
System Facilities for Programming	Virtual Machine System Facilities for Programming *(Release 5)*	*ST24-5288*	*Discussion of system programming tasks and commands, including DDR for both the VM/SP and VM/SP HPO environments*
System Logic and Problem Determination Guide Volume 2—CMS	VM/SP System Logic and Problem Determination Guide Volume 2—CMS	*LY20-0893*	*Discussion of CMS file storage logic in the VM/SP and VM/SP HPO environments*
System Programmer's Guide	VM/SP System Programmer's Guide *(Release 4)*	*SC19-6203*	*Discussion of system programming tasks and commands, including CP INDICATE, SYSOWN, MONITOR*
	VM/SP HPO System Programmer's Guide *(Release 4.2)*	*ST00-1897*	*Discussion of system programming tasks and commands, including CP INDICATE, SYSOWN, MONITOR*
VMBACKUP Management System General Information	VMBACKUP Management System General Information	*GH20-6248*	*Overview of VMBACKUP and VMArchive functions for data backup and archival*
VM/Directory Maintenance General Information	VM/Directory Maintenance General Information	*GC20-1836*	*Overview of DIRMAINT functions for directory maintenance*
VM/Directory Maintenance Installation and System Administrator's Guide	VM/Directory Maintenance Installation and System Administrator's Guide	*SC20-1840*	*Description of DIRMAINT administrator commands*
VM/ISF General Information	*VM/Intersystems Facility General Information*	*GC23-0397*	*Provides an overview of using VM/ISF for sharing minidisks*

Short Title	Full Title	Order Number	Contents
VM/ISF Planning and Installation	*VM/Intersystems Facility Planning and Installation*	*SC23-0399*	*Provides guidance and reference information for those planning system resources' usage for VM/ISF and for installers of VM/ISF*
VM/ISF Operation and Use	*VM/Intersystems Facility Operation and Use*	*SC23-0400*	*Describes operation of VM/ISF functions, and contains CP and CMS command syntax and messages and codes for CP, CMS, and VM/Pass-Through Facility*
VMMAP General Information	VM Monitor Analysis Program General Information	*GC34-2164*	*Overview of VMMAP functions for performance monitoring*
VMMAP User's Guide and Reference	Virtual Machine Monitor Analysis Program User's Guide and Reference	*SC34-2166*	*Description of VMMAP commands and reports*
VM/PPF General Information	VM Performance Planning Facility General Information	*GC34-2126*	*Overview of VM/PPF functions for performance analysis and modeling*
VM/Integrated System Information			
VM/IS Planning For Your System	VM/Integrated System Planning For Your System	*SC24-5337*	*Provides pre-installation planning instructions for VM/IS and should be read before* VM/IS Installing Your System
VM/IS Installing Your System	VM/Integrated System Installing Your System	*SC24-5341*	*Provides step-by-step instructions for installing VM/IS; use this book in conjunction with* VM/IS Planning For Your System
VM/IS Managing Your System	VM/Integrated System Managing Your System	*SC24-5338*	*Provides operation and administration instructions for VM/Integrated System*
VM/IS Reporting System Problems	VM/Integrated System Reporting System Problems	*SC24-5339*	*Provides problem reporting instructions for VM/IS and is based on VM/Interactive Productivity Facility's Problem Control Facility*
VM/IS Learning to Use Your System: Error and Information Messages	VM/Integrated System Learning to Use Your System: Error and Information Messages	*SC24-5351*	*Describes error and information messages produced by VM/IS; includes cross-reference table to help locate messages produced by other products and functions included in VM/IS*
VSE System Information			
VSE/AF System Control Statement	VSE/Advanced Functions System Control Statements	*SC33-6198*	*Description and syntax for VSE operator statements and commands*
VSE/AF System Management Guide	VSE/Advanced Functions System Management Guide	*SC33-6191*	*Description of system management tasks under VSE/AF*
VSE/AF Operation	VSE/Advanced Functions Operation	*SC33-6194*	*Various operational considerations including the PRINTLOG function*
VSE/POWER Application Programming	VSE/POWER Application Programming	*SC33-6276*	*Information on using the system's accounting function*
VSE/POWER Installation and Operation Guide	VSE/POWER Installation and Operation Guide	*SH12-5329*	*Description of VSE/POWER input and output scheduling functions*
VSE/SP Administration	VSE/System Package Administration	*SC33-6306*	*Use of Interactive Interface dialogs for tasks including storage management*
VSE/SP Installation	VSE/System Package Installation	*SC33-6178*	*Assistance with regenerating VSE system files and libraries*
VSE/SP Migration (Volumes 1 and 2)	VSE/System Package Migration (Volumes 1 and 2)	*SC33-6179*	*Techniques for migration of system and user data and data bases*
VSE/SP System Use	VSE/System Package Use	*SC33-6174*	*Use of Interactive Interface dialogs for tasks including storage management*

Short Title	Full Title	Order Number	Contents
DITTO Program Reference and Operations Manual	Data Interfile Transfer, Testing and Operations Utility for VSE and VM Program Reference and Operations Manual	*SH19-6104*	*Detailed information on using VSE/DITTO*
DL1/DOS/VS Data Base Administration	DL1/DOS/VS Data Base Administration	*SH24-5011*	*Assistance with moving DL/1 data bases*
DL1/DOS/VS Resource Definition and Utilities	DL1/DOS/VS Resource Definition and Utilities	*SH24-5021*	*Assistance with moving DL/1 data bases*
VSE Fast Copy Data Set Installation Reference	DOS/VSE Fast Copy Data Set Installation Reference	*SC33-6082*	*Specific information on using the VSE/Fast Copy utility*
VSE/PT Program Description/Operations Manual	VSE/Performance Tool Program Description/Operations Manual	*SH20-2171*	*Instructions for installation and use of optional VSE performance monitoring product*
VM Running Guest Operating Systems	VM Running Guest Operating Systems	*GC19-6212*	*Discussion of guest operating systems under VM*
VMMAP User's Guide and Reference Manual	Virtual Machine Monitor Analysis Program User's Guide and Reference	*SC34-2166*	*Discussion of guest operating systems under VM*

Index

A

access code, remote support session 71
access code, remote, generating, example 149
  3990 Models 1, 2, and 3 149
Access Method Services
  obtaining reports with LISTDATA 127
  support for extended functions 110
  support for remote support sessions 109
  TSO execution of commands 110
ACCESSCODE parameter in LISTDATA command
  3990 Models 1, 2, and 3 144
actuators 65
additional channels 33
addressing
  DASD string 99
  storage director 99
ALL parameter in LISTDATA command
  3990 Model 3 144
allocating tracks 54
allowing access to cache, examples
  3990 Model 3 158
attachments
  channel 40
  DASD 41
  processor 40
availability (RAS) features 13
availability of cache and NVS 69

B

bibliography 309
bypass cache 57

C

cache modes
  bypass cache 57
  cache modes 56
  inhibit cache load 58
  inhibit cache loading 58
  normal caching 56
  sequential access 57
cache operations
  seek operations 45, 46
Cache Power Sequence Complete indicator 186
Cache RMF Reporter
  benefits of 123
  caching subsystem summary report 126
  description of 123
  device aggregation report 126
  installation considerations 127
  reports generated 124
  subsystem aggregation report 125
cache storage
  availability of 69
  capacity of 27
  DASD fast write 51
  description of 27
  least recently used data 55
  management of 54
  setting modes 112
  status after IML 46
  status defaults at installation 46
  track slots 54
caching subsystem summary report example 126
calculating read/write hit ratios 128
channel
  attachment of 40
  blue channel interface cables 13, 88
  busy time 65
  commands 111
  data transfer rate 40
  features of
    Four Channel Switch, Additional 36
    remote/local capability 32
  usage of 62
channel switch features 33
commands, access method services
  LISTDATA 143
  SETCACHE 156
concurrent maintenance 69
configuration and performance
  guidelines 65
  subsystem components 60
configuration examples
  dual-frame 88
  single-frame 88
configuration guidelines 65
configurations
  DASD guidelines 101
  dual-frame 88
  minimum DLSE subsystem 44
  planning 87
  single-frame 88
contingent allegiance 298
control unit addresses 99
Control Voltage Present indicator 186
counters report, samples 149
COUNTS parameter in LISTDATA command
  3990 Model 3 143

D

DASD
  attachment of 41
  estimating usage of 62
  intermixing models 41
  intermixing strings 42
  minimum configuration 44
  string length allowed 43
  subsystem description 22
  subsystem guidelines 101
  3380 models 41
DASD fast write
  description of 51
  requirements 51
DASD string addressing 99
data transfer rate 40
data transfer service time 61
data, vital product, worksheets 215
Define Extent attributes
  bypass cache 57
  inhibit cache load 58
  sequential access 57
device actuator busy 65
device aggregation report example 126
DEVICE parameter in LISTDATA command
  3990 Model 3
DEVICE parameter in SETCACHE command
  3990 Model 3 157
device service time on a noncache storage control 60
DFDSS DUMP operation
  OPTIMIZE parameter 243
Disabled indicator 187
disabling channels to storage paths procedures 188
disabling remote support session procedure 187
dual copy
  description of 53
  duplex pair 53
  logical volume 53
  overview 14
  requirements 53
  using 135
dual-frame configurations
  description of 88

E

ease of migration improvements 16
emergency power off 181
enabling channel to storage path procedure 188
enabling remote support session procedure 187
environmental improvements 17
error logging 69
estimating usage of
  channel 62
  DASD 62
  storage director 62

F

fast write capabilities
  overview 13
features
  description of 33
  EC465359/ECA131 40
  Four Channel Switch, Additional 36
  Remote/Local Capability 32
  9432 40
  9433 40
FILE parameter in LISTDATA command
  3990 Model 3
FILE parameter in SETCACHE command
  3990 Model 3 156
Four Channel Switch, Additional feature 36
four-path capability
  See 4-path capability for 3380 J and K models
front end miss 48
full-track read 243

I

IDCAMS
inhibit cache load 58
inhibit cache loading 58
intermixing DASD models 41
intermixing DASD strings 42
introduction 9

L

latency 60, 62
least recently used algorithm
LEGEND parameter in LISTDATA command
  3990 Model 3 145
LISTDATA command
  description, format
  sample output 149
LISTDATA command examples
listing subsystem counters, examples
  3880, 3990 Model 3 146
listing subsystem status, examples
  3990 Model 3 148
local power on procedure 186
LRU 55

M

managing cache
  bypass cache 57
  inhibit cache load 58
  least recently used algorithm 55
  promoting tracks 54
  sequential access 57
  track slots 54
managing the subsystem
  Cache RMF Reporter 123
  description of 123

managing the subsystem *(continued)*
performance monitoring 123
Message indicator 187
migrating programs to 3990 111
migration improvements 16
minimum DLSE configuration 44
models
DASD models 41
upgrading 25
2-path capability 22
3990 Model 1 23
3990 Model 2 24
3990 Model 2 and 3 intermixed 2-path and 4-path strings 30
3990 Model 2 and 3 2-path strings 29
3990 Model 3 26
4-path capability 22
monitoring performance 123
multipath storage director 30
MVS installation
setting cache modes 112
vital product data 215
MVS support
migrating to 3990 111
recommended programs 109
required programs 109

N

NOLEGEND parameter in LISTDATA command
3990 Model 3 145
nonvolatile storage
availability of 69
DASD fast write 28, 51
description of 27
dual copy 28, 53
normal caching 56
number of addressable devices for a logical DASD subsystem 98

O

OFF parameter in SETCACHE command
3990 Model 3 157
ON parameter in SETCACHE command
3990 Model 3 157
operator panel
description of 181
illustration of 183, 184, 185
indicators
Cache Power Sequence Complete 186
Control Voltage Present 186
Disabled 187
Message 187
Power On 187
Power On Sequence Initiated 186
Process 187
Wait 187
procedures
operator panel *(continued)*
procedures *(continued)*
disabling channels to storage paths 188
disabling remote support session 187
emergency power off 181
enabling channel to storage path 188
enabling remote support session 187
power on/off 181
restarting storage path 188
switching power off 186
switching power on from processor 186
switching power on from the operator's panel 186
Storage Cluster 0 and 1 187
storage paths/channels 187
OPTIMIZE parameter, on DUMP 243
optional features
additional channels 33
Four Channel Switch, Additional 36
Remote Local Capability 32
summary of features 33
OUTDATASET parameter in LISTDATA command
3990 Model 3 145
OUTFILE parameter in LISTDATA command
3990 Model 3 145

P

pair, duplex 53
performance
improvements 11
performance and configuration
cache modes 56
guidelines 59
performance variables 65
performance guidelines 59
performance monitoring 123
performance variables 65
physical configuration planning
DASD guidelines 101
logical DASD subsystem 22
number of addressable devices 98
reconfiguring a DASD subsystem 105
storage director addressing 99
string addressing 99
subsystem identifier 90
planning
configuration and configuration 60
DASD configurations 101
dual-frame configurations 88
logical DASD subsystem 22
physical configuration 87
single-frame configurations 88
subsystem components
channel usage 62
DASD usage 62
device service time on noncache storage control 60
device service times on 3990 62

planning *(continued)*
subsystem components *(continued)*
storage director usage 62
verify schedules 87
Power On indicator 187
Power On Sequence Initiated indicator 186
power on/off procedures
emergency power off 181
from the processor 186
power on from operator's panel 186
power on from processor 186
switching power off 186
powering on from the operator's panel 186
predictable write 52
Process indicator 187
processor attachment 40
prohibiting access to cache, examples
3990 Model 3 159
promoting tracks 54
publications 309
bibliography of 309

Q

quiesce request 70

R

RAS
See reliability, availability, and serviceability
read hits 47
read miss 47
Read Multiple Count, Key, and Data channel command 243
read operations
description of 45, 47
front end miss 48
read hit 47
read miss 47
read/write hit ratios calculations 128
reconfiguring a DASD subsystem 105
reconnect miss (RPS miss) 60
regions, separate power and service 20
reliability, availability, and serviceability
access code for remote support 71
cache and NVS availability 69
concurrent maintenance 69
data security 71
description of 67
error logging 69
features 13
quiesce request 70
remote support 70
resume request 70
service information message 67
support facility 67
remote access code, generating, example 149
remote power on procedure 186
remote support 70
remote support session security 71
Remote/Local Capability 32
restarting storage path 188
resume request 70
RMF Reporter, Cache 123
RMF reports generated 124

S

SCA
See shared control array
search
operations of 45, 46
service time of 61, 62
seek
operation of 45, 46
service time of 60, 62
segments of tracks 54
sequential access 57
description of 57
service information message
alert message format 67
description of 67
service times on 3990
latency 62
search 62
seek 62
service times, noncache
data transfer 61
latency 60
RPS miss 60
search 61
seek 60
serviceability features 13
SETCACHE command
description, format
3990 Model 3 156
SETCACHE command examples
3990 Model 3 158
setting cache modes 112
shared control array 20
SIM
See service information message
single-frame subsystems
single-path storage director 29
SSID
See subsystem identifier
SSL ordering information 7
STATUS parameter in LISTDATA command
3990 Model 3 143
status report samples 152
storage administration under MVS 123
storage administration under VM 173
description 173
VM/SP HPO CMS support 172

storage administration under VSE 178
description 178
Storage Cluster 0 and 1 switches 187
storage clusters 20
storage director addressing 99
storage director usage 62
Storage Paths/Channels on operator panel
Storage Subsystem Library
library structure 5
string addressing 99
subsystem
cache storage 27
channel attachment 40
channel features 33
DASD attachment 41
features of 33
installation and storage administration under VSE 177
installation of 109
installation under VM 161
introduction 19
logical DASD subsystem 22
managing the subsystem 123
nonvolatile storage 27
operator panel 181
overview 9
processor attachment 40
read operations 45, 47
search operations 45, 46
seek operations 45, 46
shared control array 20
storage administration under VM 173
storage administration under VSE 178
storage clusters 20
vital product data worksheets 215
write operations 46, 48
3990 Model 1 23
3990 Model 2 24
3990 Model 3 26
subsystem aggregation report example 125
subsystem components 60
subsystem counters, listing, examples
3990 Model 3 146
subsystem identifier 90
SUBSYSTEM parameter in LISTDATA command
3990 Model 3
SUBSYSTEM parameter in SETCACHE command
3990 Model 3 157
Subsystem Status Report
sample report 152
SETCACHE
3990 Model 3 156
subsystem status, listing, example
3990 Model 3 148
support facility 67
switching power off 186
switching power on and off 181
switching power on from processor procedure 186

T

track segments 54
track slots
description of 54
promotion of 54
TSO
invoking EREP from a TSO terminal
two-path capability
See 2-path

U

UNIT parameter in LISTDATA command
3990 Model 3
UNIT parameter in SETCACHE command
3990 Model 3 156
upgrading
3990 Model 1 to 3990 Model 2 or 3 24
3990 Model 2 to 3990 Model 3 25

V

verify schedules 87
vital product data worksheets 215
VM
pointer to cache information 174
VM caching candidates 173
VM installation
channel commands 161, 177
required programs, basic operations 161
required programs, extended function operations 161
support 161
vital product data 215
VM/SP HPO CMS 172
VM/SP HPO CMS support 172
VOLUME parameter in LISTDATA command
3990 Model 3
VOLUME parameter in SETCACHE command
3990 Model 3 156
volume, dual copy logical 53
VSE installation and storage administration
program support 177
required programs 177
vital product data 215

W

Wait indicator 187
worksheets, vital product data 215
write hit 49
write miss 49
write operations
DASD fast write 51
description of 46, 48
predictable write 52

write operations *(continued)*
write hit 49
write miss 49
write, predictable 52
WTO parameter in LISTDATA command
3990 Model 3 145

Numerics

2-path
addressing 99
description 22
guidelines for attaching 101
number of addressable devices 98
operator panel format 184, 185
single-frame configurations 88
single-path storage director 29
3.0 megabyte channel data transfer time 61
3380 attachment
configuration guidelines 101
intermixing models 41
intermixing strings 42
minimum configuration 44
models 41
string length allowed 43
subsystem description 22
3990 Model AD4/AE4 installation/maintenance feature (EC465359/ECA131) 40
3990 Model 1
description of 23
in DLS mode 23
upgrading to 3990 Model 2 or 3 24
3990 Model 2
description of 24
in DLSE mode attaching intermixed 2-path and 4-path DASD strings 31
in DLSE mode attaching 4-path DASD strings 19, 25
reconfiguring the attached DASD 105
upgrading to 3990 Model 3 25
with intermixed 2-path and 4-path strings 30
with 2-path strings 29
3990 Model 3
cache storage 27
description of 26
in DLS mode attaching 2-path DASD strings 29
in DLSE mode attaching 4-path DASD strings 26
nonvolatile storage 27
reconfiguring the attached DASD 105
with intermixed 2-path and 4-path strings 30
with 2-path strings 29
3990 2-path attachment feature (9432) 40
3990 4-path attachment feature (9433) 40
4.5 megabyte channel data transfer time 61
4-path capability for 3380 J and K models
addressing 99
description of 22
guidelines for attaching 101
multipath storage director 30
4-path capability for 3380 J and K models *(continued)*
number of addressable devices 98
operator panel format 183

IBM 3990 Storage Control
Planning, Installation, and
Storage Administration Guide

Order No. GA32-0100-1

READER'S
COMMENT
FORM

This manual is part of a library that serves as a reference source for systems analysts, programmers, and operators of IBM systems. You may use this form to communicate your comments about this publication, its organization, or subject matter with the understanding that IBM may use or distribute whatever information you supply in any way it believes appropriate without incurring any obligation to you. Your comments will be sent to the author's department for whatever review and action, if any, are deemed appropriate.

Note: *Copies of IBM publications are not stocked at the location to which this form is addressed. Please direct any requests for copies of publications, or for assistance in using your IBM system, to your IBM representative or to the IBM branch office serving your locality.*

Possible topics for comment are:

Clarity Accuracy Completeness Organization Coding Retrieval Legibility

If you wish a reply, give your name, company, mailing address, and date:

_____

_____

_____

_____

What is your occupation? _____

Number of latest Newsletter associated with this publication: _____

Thank you for your cooperation. No postage stamp necessary if mailed in the U.S.A. (Elsewhere, an IBM office or representative will be happy to forward your comments or you may mail them directly to the address in the Edition Notice on the back of the front cover or title page.)

Reader's Comment Form

Fold and Tape | Please Do Not Staple | Fold and Tape

NO POSTAGE
NECESSARY
IF MAILED
IN THE
UNITED STATES

BUSINESS REPLY MAIL

FIRST CLASS PERMIT NO. 40 ARMONK, NEW YORK

POSTAGE WILL BE PAID BY ADDRESSEE

International Business Machines Corporation
Department 61C
P.O. Box 27155
Tucson, AZ, USA 85744

Fold and Tape | Please Do Not Staple | Fold and Tape

IBM®

IBM 3990 Storage Control
Planning, Installation, and
Storage Administration Guide

Order No. GA32-0100-1

READER'S
COMMENT
FORM

This manual is part of a library that serves as a reference source for systems analysts, programmers, and operators of IBM systems. You may use this form to communicate your comments about this publication, its organization, or subject matter with the understanding that IBM may use or distribute whatever information you supply in any way it believes appropriate without incurring any obligation to you. Your comments will be sent to the author's department for whatever review and action, if any, are deemed appropriate.

Note: *Copies of IBM publications are not stocked at the location to which this form is addressed. Please direct any requests for copies of publications, or for assistance in using your IBM system, to your IBM representative or to the IBM branch office serving your locality.*

Possible topics for comment are:

Clarity Accuracy Completeness Organization Coding Retrieval Legibility

If you wish a reply, give your name, company, mailing address, and date:

_____

_____

_____

_____

What is your occupation? _____

Number of latest Newsletter associated with this publication: _____

Thank you for your cooperation. No postage stamp necessary if mailed in the U.S.A. (Elsewhere, an IBM office or representative will be happy to forward your comments or you may mail them directly to the address in the Edition Notice on the back of the front cover or title page.)

Reader's Comment Form

Fold and Tape | Please Do Not Staple | Fold and Tape

NO POSTAGE
NECESSARY
IF MAILED
IN THE
UNITED STATES

BUSINESS REPLY MAIL

FIRST CLASS PERMIT NO. 40 ARMONK, NEW YORK

POSTAGE WILL BE PAID BY ADDRESSEE

International Business Machines Corporation
Department 61C
P.O. Box 27155
Tucson, AZ, USA 85744

Fold and Tape | Please Do Not Staple | Fold and Tape

IBM®

IBM 3990 Storage Control
Planning, Installation, and
Storage Administration Guide

Order No. GA32-0100-1

READER'S
COMMENT
FORM

This manual is part of a library that serves as a reference source for systems analysts, programmers, and operators of IBM systems. You may use this form to communicate your comments about this publication, its organization, or subject matter with the understanding that IBM may use or distribute whatever information you supply in any way it believes appropriate without incurring any obligation to you. Your comments will be sent to the author's department for whatever review and action, if any, are deemed appropriate.

Note: *Copies of IBM publications are not stocked at the location to which this form is addressed. Please direct any requests for copies of publications, or for assistance in using your IBM system, to your IBM representative or to the IBM branch office serving your locality.*

Possible topics for comment are:

Clarity Accuracy Completeness Organization Coding Retrieval Legibility

If you wish a reply, give your name, company, mailing address, and date:

_____

_____

_____

_____

What is your occupation? _____

Number of latest Newsletter associated with this publication: _____

Thank you for your cooperation. No postage stamp necessary if mailed in the U.S.A. (Elsewhere, an IBM office or representative will be happy to forward your comments or you may mail them directly to the address in the Edition Notice on the back of the front cover or title page.)

Reader's Comment Form

Fold and Tape | Please Do Not Staple | Fold and Tape

NO POSTAGE
NECESSARY
IF MAILED
IN THE
UNITED STATES

BUSINESS REPLY MAIL

FIRST CLASS PERMIT NO. 40 ARMONK, NEW YORK

POSTAGE WILL BE PAID BY ADDRESSEE

International Business Machines Corporation
Department 61C
P.O. Box 27155
Tucson, AZ, USA 85744

Fold and Tape | Please Do Not Staple | Fold and Tape

IBM®

IBM 3990 Storage Control
Planning, Installation, and
Storage Administration Guide

Order No. GA32-0100-1

READER'S
COMMENT
FORM

This manual is part of a library that serves as a reference source for systems analysts, programmers, and operators of IBM systems. You may use this form to communicate your comments about this publication, its organization, or subject matter with the understanding that IBM may use or distribute whatever information you supply in any way it believes appropriate without incurring any obligation to you. Your comments will be sent to the author's department for whatever review and action, if any, are deemed appropriate.

Note: *Copies of IBM publications are not stocked at the location to which this form is addressed. Please direct any requests for copies of publications, or for assistance in using your IBM system, to your IBM representative or to the IBM branch office serving your locality.*

Possible topics for comment are:

Clarity Accuracy Completeness Organization Coding Retrieval Legibility

If you wish a reply, give your name, company, mailing address, and date:

_____

_____

_____

_____

What is your occupation? _____

Number of latest Newsletter associated with this publication: _____

Thank you for your cooperation. No postage stamp necessary if mailed in the U.S.A. (Elsewhere, an IBM office or representative will be happy to forward your comments or you may mail them directly to the address in the Edition Notice on the back of the front cover or title page.)

Reader's Comment Form

Fold and Tape | Please Do Not Staple | Fold and Tape

NO POSTAGE
NECESSARY
IF MAILED
IN THE
UNITED STATES

BUSINESS REPLY MAIL

FIRST CLASS PERMIT NO. 40 ARMONK, NEW YORK

POSTAGE WILL BE PAID BY ADDRESSEE

International Business Machines Corporation
Department 61C
P.O. Box 27155
Tucson, AZ, USA 85744

Fold and Tape | Please Do Not Staple | Fold and Tape

IBM®

File Number
S370-07/4300-07

GA32-0100-01

Printed in U.S.A.