M. Haupt 81

IBM® Technical Newsletter

This Newsletter No. GN32-0019
Date July 1, 1977

Base Publication No. GA32-0028-2
File No. S370-07

Previous Newsletters GN32-0011

Introduction to the IBM 3850 Mass Storage System (MSS)

This Technical Newsletter provides replacement pages for the subject publication. These replacement pages remain in effect for subsequent releases unless specifically altered. Pages to be inserted and/or removed are:

Pages to be Removed	Attached Pages to be Inserted*
15, 16	15–16.1

*If you are inserting pages from different newsletters or supplements and *identical* page numbers are involved, always use the page with the latest date. The page with the latest date contains the highest level of information.

A change to the text is indicated by a vertical line to the left of the change.

Summary of Amendments
This Technical Newsletter incorporates miscellaneous editorial and technical changes. Each technical change is marked by a vertical line to the left of the change.

Note: *Please file this cover letter at the back of the manual to provide a record of changes.*

IBM Corporation, Information Planning and Editing, Dept. 21E, Boulder, Colorado 80302

Printed in U. S. A.

When the required data has been completely staged, the data cartridge is returned to its home storage cell. The staging/destaging operations are supervised and directed by the Mass Storage Control.

A. Data Cartridge

The 3850 Mass Storage Facility uses data cartridges to store data. Each cartridge can contain up to 50.4 million bytes of data; the cartridge is approximately 2 inches (5.08 cm) in diameter and 4 inches (10.16 cm) long. The cartridge holds a spool of tape 770 inches (17.5m) long (Figure 6).

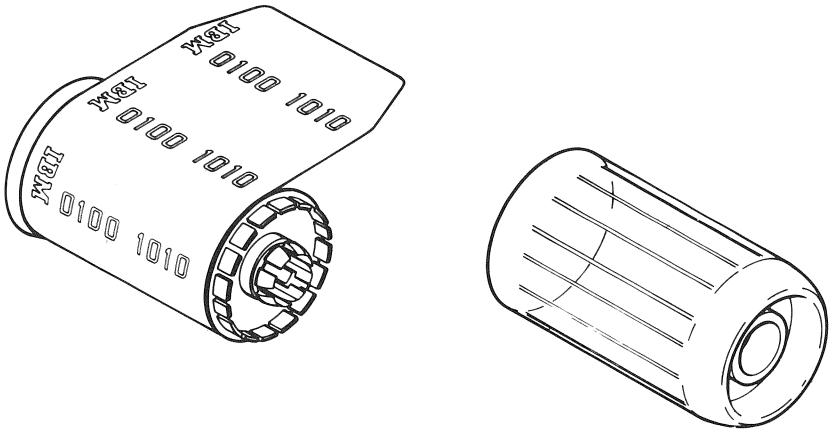

50.4 million bytes per cartridge

770 total inches of tape

677 inches of usable tape

2 inches diameter

4 inches length

Figure 6. Data Cartridge

Data is recorded on the magnetic tape in the image of 3330 Disk Storage cylinders. Each cylinder is recorded on a fixed location on the tape, and specific cylinders can be located by unique identifiers along the edge of the tape. Each cartridge is capable of storing 202 cylinders in the 3330 format. Therefore, two cartridges are the equivalent of one 3336 Model 1 Disk Pack.

The *mass storage volume* is the storage reference for data sets within the Mass Storage System, just as tape volume and disk pack volume are the storage references for tape and disk data sets.

Mass storage volumes within the 3851 Mass Storage Facility have the following characteristics:

404 cylinders

19 tracks per cylinder

13,030 bytes per track maximum

100 megabytes

The IBM 3850 Data Cartridges and associated machine hardware have been designed to be compatible in all respects and therefore offer maximum performance. While IBM would prefer the use of the IBM data cartridges, it is recognized that cartridges furnished by other suppliers may also be capatible and of equal quality. However, if IBM determines that machine damage, replacement of parts (due to other than normal wear) or repetitive service calls are attributable to the presence of a non-IBM data cartridge, IBM will charge its 3850 customer for all such required service and parts at its applicable time and material rates.

B. Data Recording Device

The 3851 Mass Storage Facility includes one to four pairs of data recording devices (DRDs) and one data recording control (DRC) for each DRD pair for reading and recording data from and onto cartridges. The DRD also has a high speed search capability that makes storing multiple data sets on one cartridge practical.

C. Cartridge Access Station

The 3851 Mass Storage Facility has a cartridge access station which allows manual entry and removal of cartridges. There are separate ports for entry and exit of cartridges.

D. Accessors

Two accessors and associated accessor controls and power supplies are included in every model of the 3851 Mass Storage Facility. The accessors provide for the movement of data cartridges in the Mass Storage Facility; that is, from a storage cell to a data recording device and back and, to the cartridge access station.

E. The Mass Storage Control (MSC)

The Mass Storage Control (MSC) in the 3851 Mass Storage Facility controls all staging and destaging operations. The MSC's functions include:

1. Accepting requests for data from up to four System/370 CPUs, Models 145, 155II, 158, 165II, 168, 158 multiprocessor and 168 multiprocessor.
2. Determining the location of data by referring to an inventory list of cartridges and mass storage volumes.
3. Allocating space in eight-cylinder increments on staging DASD for data to be staged.
4. Instructing the accessor controls to move a cartridge containing the requested data from its storage cell to a data recording device.
5. Initiating the staging of the data from the cartridge in the DRD to the allocated space on disk storage.
6. Performing error recovery procedures, alternate path retry, and device reallocation as needed during the staging/destaging operation.
7. Monitoring the amount of allocable disk storage space. When the amount of allocable space becomes less than a specified threshold (or when the host system so instructs), initiating deallocation and destaging of changed cylinders to create additional allocable space available for other data set requests. The criteria for selection of cylinders to be destaged is based on a least-recently-used (LRU) algorithm.
8. Maintaining usage and error statistics by component and cartridge.

9. Recording the physical configuration of the MSS:
   - Data and control paths
   - Status of components
   - Automatic switching of components
10. Maintaining a record of the location, attributes, and status of all mass storage volumes.