THE BELL SYSTEM TECHNICAL JOURNAL
Vol. 62, No. 10, December 1983
Printed in U.S.A.

The AR6A Single-Sideband Microwave Radio System:

Radio-Line Physical Design

By S. A. HARVEY* and P. D. PATEL*

(Manuscript received February 7, 1983)

The physical design of the AR6A radio-line equipment is the product of combining the system operating requirements with the technology available to meet those requirements economically. As part of the description of the radio-line equipment, we discuss the practical considerations for partitioning the circuit block diagrams into realizable units. Modularity is a new feature incorporated into the design of the transmitter and receiver radio bay. We also describe a novel thermal design detail used with discrete transistors in the IF circuits to ensure their reliable operation.

I. INTRODUCTION

AR6A† radio is a new high-capacity, long-haul microwave radio relay system operating in the 6-GHz common carrier band. The use of single-sideband modulation for this high-capacity system was made possible only through the achievement of a high degree of system linearity, which was obtained by designing each circuit within the AR6A System to meet a linearity performance objective. Closely coupled with the system and circuits development of AR6A was the physical design of the radio-line equipment. The Transmitter-Receiver

---

* Bell Laboratories.

† Amplitude Modulation Radio at 6 GHz for the initial (A) version of the system.

(TR)* bay, the TR support bay, and their constituent modules are the principal elements of the AR6A radio-line equipment.

The configuration of this equipment is the culmination of the physical design effort applied to the AR6A System requirements. Physical design is a product creation process that takes a design concept through an iterative development stage and then into manufacture. The driving force behind any new product development, such as AR6A, is the potential market for that product. The AR6A market was identified as the need for a high-capacity, long-haul 6-GHz microwave radio system to overbuild the existing operating companies' long-haul 4-GHz TD-2 and TD-3 radio routes. The principal operating environment for the AR6A radio-line equipment would be within the existing radio station buildings of the TD radio network.

The physical design process began when the AR6A transmitter-receiver was transformed from a systems concept into a functional block diagram. Partitioning the system block diagram into realizable circuit modules was the first step toward the physical design concept. Consideration for the existing buildings and the goals of the operation and maintenance plans was used to determine several fundamental physical design objectives. These objectives were: (1) to assemble a single AR6A transmitter and receiver unit into one radio bay framework, (2) to assemble the common radio-line equipment into one support bay unit, (3) to design for modular field assembly of the TR bay, and (4) to design the radio-line equipment for a nonair-conditioned building environment.

The physical design effort can be divided into two categories: (1) an overall equipment design level, and (2) an individual module design level. The overall equipment design effort is concerned with putting together the many individual circuit modules into one functioning unit, while at the individual design level we concentrated on providing the required circuit functions within the physical bounds determined by the overall equipment design concept. These two categories of design must go on together during development as neither can proceed very far without some knowledge of the other.

The overall radio-line equipment concept was the outcome of an iterative process of configuring each circuit module and then arranging the modules spatially within the framework so that all the physical design objectives were met simultaneously. The particular configuration of each circuit module was influenced by three principal factors: (1) the technology available to implement the required circuit function, (2) the thermal design requirements of the module, and (3) the spatial

---

* Acronyms and abbreviations used in the text and figures of this paper are defined at the back of this *Journal.*

relationship of the circuit module with respect to the overall equipment concept. The final physical form of each module emerged from the integration of its individual design objectives into the overall equipment concept.

The challenge of this physical design process was to produce AR6A radio-line equipment designs which met both the system performance requirements, and were economically attractive to purchase, to operate, and to maintain.

II. RADIO-LINE EQUIPMENT DESCRIPTION

Figure 1 is a simplified block diagram showing the AR6A transmitter, receiver, and the common radio-line functions. The physical design realizations of this functional diagram are the AR6A TR bay and the AR6A TR support bay.

2.1 Transmitter-receiver bay

The AR6A TR bay, as shown in Fig. 2, is assembled onto a 19-inch panel framework with overall dimensions of 22-3/8 inches wide by 15-1/2 inches deep by 9 feet tall. All the TR bay components are mounted below the 7-foot level in accordance with human factors design considerations. The TR bay is composed of three sections: (1) an upper section consisting of an Intermediate Frequency (IF) shelf assembly and plug-in units, (2) a middle Radio-Frequency (RF) section made up of waveguide-type components, and (3) a lower housing for power supplies and the microwave generator. The predominant color is light gray, which is in harmony with existing radio station equipment. The rest of the color scheme is black, red, and dark blue-gray blended with natural and applied finishes on aluminum, brass, copper, and steel.

The six common alarm and control interface circuits are on printed wiring boards complete with faceplates and are located on the top left level of the IF shelf assembly. A dc-to-dc power converter, which is the common low-voltage power supply for the IF shelf, is located at the upper right-hand side. The majority of the transmitter and receiver IF circuit functions are housed in 12-inch by 12-inch by 2-inch plug-in modules. These IF modules are arranged together for ease of interconnection and operational access into the IF shelf. The transmission path connections are made coaxially across the front of the plug-in modules. A display panel, located immediately below the IF shelf, provides a surface for visual information and dresses the interface between the IF and RF sections.

The receive RF signal path from the indoor waveguide run or from an adjacent AR6A TR bay comes into the channel-separating filter at the 5-1/4 foot level and then down the center of the RF section. With the space-diversity option there are two receive signal paths and two

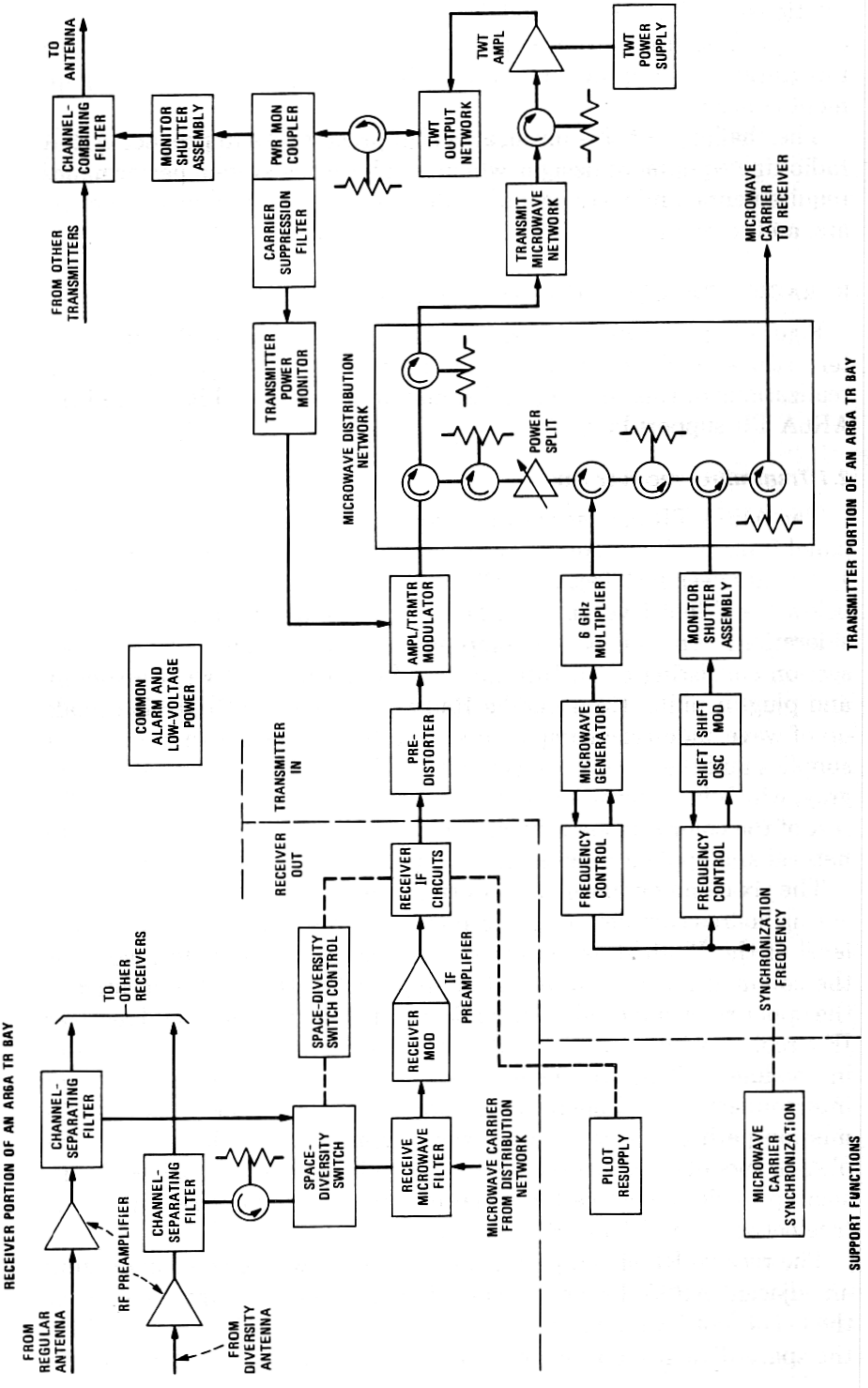

Fig. 1—Block diagram of the AR6A radio line.

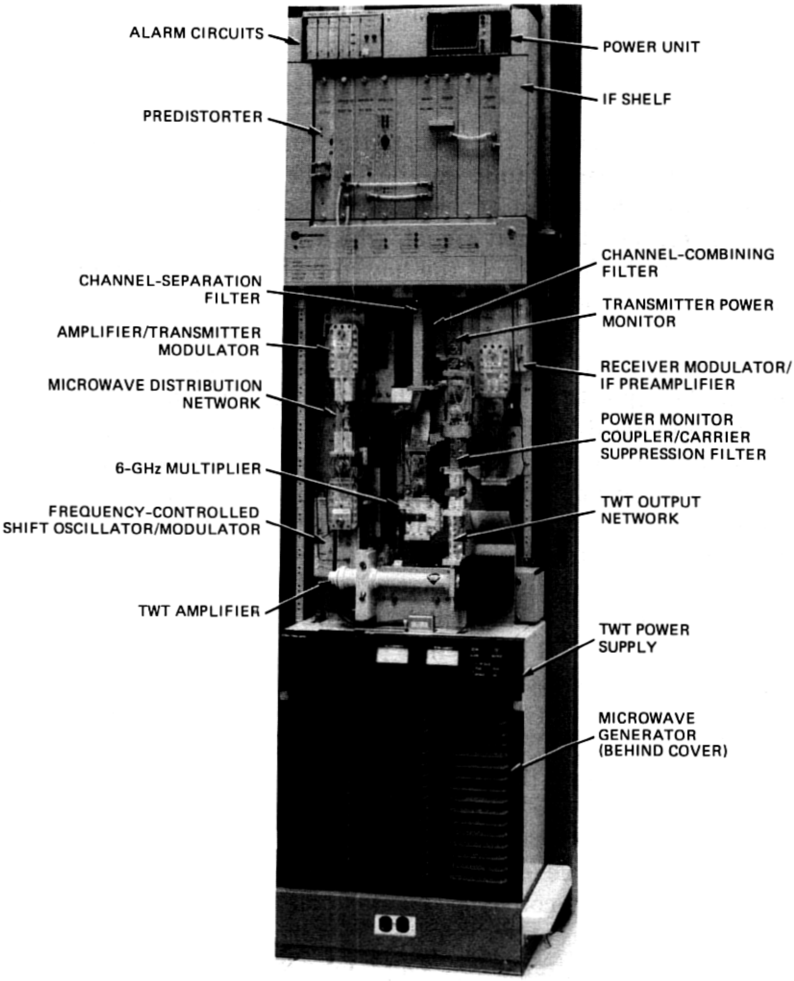

Fig. 2—AR6A transmitter-receiver bay.

channel-separating filters. The upper portions of the RF channel filters are hidden from view behind the removable display panel. The space-diversity switch allows either the RF signal from the main or the diversity antenna to be connected into the receiver. Control of the switch is provided through the switch control unit under the direction of the receiver IF section. The receive signal output from the space-diversity switch is fed through flexible waveguide up to the right, through a waveguide RF filter, and into the receiver modulator. Here the RF signal is down converted to a 59- to 89-MHz IF signal and then amplified in the IF preamplifier unit. This IF signal is cabled up the right to the IF shelf modules where it is passed through each IF module from right to left. The IF modules include filters, amplifiers, and equalizers.

The first element of the transmitter function is the predistorter, which is the leftmost unit on the IF shelf. In a repeater TR bay configuration the output of the receiver is connected directly into the transmitter. The transmit signal, which is still in the IF format, is cabled down the left side of the bay into the IF driver amplifier and transmitter modulator. After the up-conversion process, the resulting signal is transmitted through an RF waveguide filter to the Traveling-Wave-Tube (TWT) amplifier. A transition-to-coaxial cable is used to provide the input to the TWT. The amplified RF signal continues up through a reduced-height waveguide filter and into a waveguide directional coupler. A small sample of the output RF signal is passed through a waveguide filter and then coaxially fed into a power monitor. The RF signal path continues up through a monitor port and into a fixed waveguide-to-coaxial-to-waveguide network. This network makes a compact RF connection to the channel-combining filter. The transmit RF signal path continues out from the combining filter into an adjacent AR6A TR bay or into the indoor waveguide run.

The TWT high-voltage power supply is located in the lower housing directly below the traveling-wave-tube amplifier. The outer shell of the TWT power supply fills the available space for safety and operational considerations. The distinctive shape and color forms a visual transition between the RF section and the lower third of the TR bay. The microwave generator and a −19V dc power regulator unit are mounted behind the cover in the lower housing. The microwave generator is an oven-controlled crystal oscillator with multiplier stages to achieve a 1-GHz output. An external reference frequency is used to stabilize the output frequency. The 1-GHz output from the microwave generator is fed coaxially up to the RF section where a microstrip RF multiplier unit provides the local oscillator signal. This local oscillator signal is supplied via coaxial cable to a distribution network where it is split into two signal paths. One signal path goes directly to the transmitter modulator and the other signal goes to a frequency shifter. The shift oscillator/modulator shifts the transmitter local oscillator signal frequency by 252 MHz to provide the receiver with its local oscillator signal. The shift oscillator is also stabilized by an external reference through a frequency control unit.

2.2 TR support bay

The common functions that are required to operate and maintain the AR6A radio-line transmission path have been configured into a

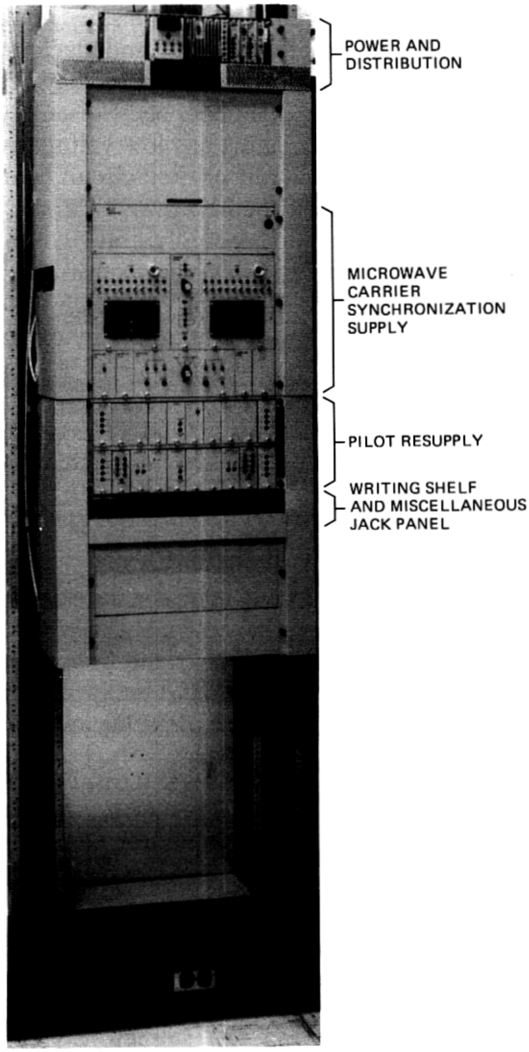

Fig. 3—AR6A transmitter-receiver support bay.

TR support bay unit, which is shown in Fig. 3. These common functions are: (1) the station reference oscillator and its control circuits for synchronization of the local oscillator frequencies within the TR bays, (2) the radio-line pilot resupply oscillators, (3) the additional oscillators and control circuits for out-of-service testing of the TR bays, and (4) the fusing and alarm circuits for the common waveguide RF preamplifiers.

The TR support bay uses the same size framework as does the TR bay so that it can be placed compatibly in the same equipment lineup as the TR bay. Its color scheme is light gray and black in keeping with the TR bay. As with TR bay, all the TR support bay components are mounted below the 7-foot level. The upper shelf assembly provides the mounting for the common TR support bay low-voltage power converters and for the fuse and alarm circuit printed circuit boards associated with the RF preamplifiers. Both the Microwave Carrier Synchronization Supply (MCSS) and the pilot resupply units, configured as shelf assemblies with plug-in modules, are positioned in the upper half of the bay framework for easy access during operation. The panel above the MCSS is reserved for the optional hot standby control unit, while the panels below the jack and access panel provide storage space for the pilot resupply distribution cables.

Additional descriptive information for the TR bay and TR support bay modules is detailed in companion articles in this issue.

III. THE MODULAR APPROACH

An important consideration in any equipment design concept is how the individual parts are put together to form the whole. This section reviews the development of the AR6A radio-line equipment design concept as a modular approach. The AR6A radio-line equipment just described is the result of physical design planning and decision making. The planning and decision process began with the conversion of the system blocks into realizable circuits. Further refinement of the system block diagram produced the evolutional equipment partitioning into the circuit modules.

3.1 Modular design concept

Recall that the physical design objectives included the design of the TR bay for modular field assembly. Station engineering and installation costs may be reduced by initially installing a complete lineup of unequipped, factory-tested, wired bay frameworks in a station, as opposed to engineering each radio-channel addition separately. Channel growth can then be accomplished by installing factory-tested TR modules, as needed, to fill out the radio route. This capability for TR bay modular field assembly provided an added challenge in the development of the radio-line equipment concept.

The initial equipment-concept decision was the selection of the 19-inch panel, duct-type framework for the radio-line equipment. We determined that the floor space available in existing radio station buildings would be sufficient for a full array of frameworks of this size. A smaller framework size would not, therefore, "save" floor space. On the contrary, a more compact framework size might create additional difficulties in engineering for the thermal design, for maintenance access, and for future changes.

A decision on the framework size could not be made without some confidence that its volume would be appropriate for the transmitter and receiver circuit modules. The size and shape of each circuit module was initially approximated based on the proposed technology for each circuit module. Alternate design options were evaluated within the criterion of meeting the overall AR6A System objectives economically. Basic decisions such as these were part of an iterative decision-making process where the impact of a decision on the adjacent levels of the physical design process was fed back to the decision makers.

Various equipment configurations of the TR bay were evaluated as possible design alternatives. The significant factors that influenced the spatial organization of the circuit modules into the final radio-line equipment concept were: (1) the modular assembly objective, (2) the human factors considerations for operation and maintenance, (3) the integration of the overall thermal design concept into the overall equipment concept, (4) the inherent size and shape of some of the circuit modules, and (5) the performance-related objective of minimizing the lengths of the transmission path circuit interconnections.

Modular field assembly was successfully accomplished by structuring the TR bay as the combination of (1) a wired basic bay, (2) a wired IF shelf assembly, and (3) an assemblage of modular RF components. The basic bay is the 19-inch panel, duct-type framework with a minimal amount of factory-installed wiring and a few mechanical piece parts to accept the mounting of the TR bay modules. The installed wiring provides an interface to the radio station dc power and alarm systems and provides the nontransmission path interconnections between the TR bay modules. Some of the mechanical piece parts are factory located with fixtures to assure the proper alignment of the RF components when they are assembled into the basic bay. This bare-bones design approach allows the basic bay to be installed in a radio station with a minimum of additional capital investment.

In the modular design concept, the IF shelf is a wired framework for plug-in modules that has a connectorized interface to the basic bay. Installation of the IF shelf and its plug-ins into the basic bay is a straightforward procedure. In contrast, the RF components did not lend themselves to a traditional modular assembly concept. However, by using the modularity guideline of ease of assembly and by carefully engineering the interface with the basic bay, an innovative modular design was achieved. Each of the RF circuit modules was connectorized, and their mounting arrangements were made easily accessible from the front of the TR bay. The frequency-sensitive waveguide components were assembled together on a supporting framework to minimize the number of waveguide connections that would need to be made in the field. This main RF module is positioned into the basic bay on locating pins for accurate alignment of the channel filters. As an additional dividend from the modular design approach, both the factory assembly of complete TR bays and the field replacement of TR units have been made uncomplicated. The TR support bay has followed the modular design example by using wired shelf assemblies and plug-in modules. There is no advantage in field assembly, however, as the support bay must be installed completely for use with the initial group of TR bays in a station.

3.2 IF circuits subsystem

The IF shelf assembly is a subsystem module within the TR bay as a whole, and, as such, it was treated as a separate entity. A close-up view of the IF shelf assembly is shown in Fig. 4. The subsystem consists of the receiver IF circuits (represented as a single block in Fig. 1) and the closely associated predistortion, alarm and interface, and low-voltage power circuits. These modules are mounted in a two-level shelf assembly that interconnects the modules via backplane wiring. The mechanical design of the shelf assembly is a combination

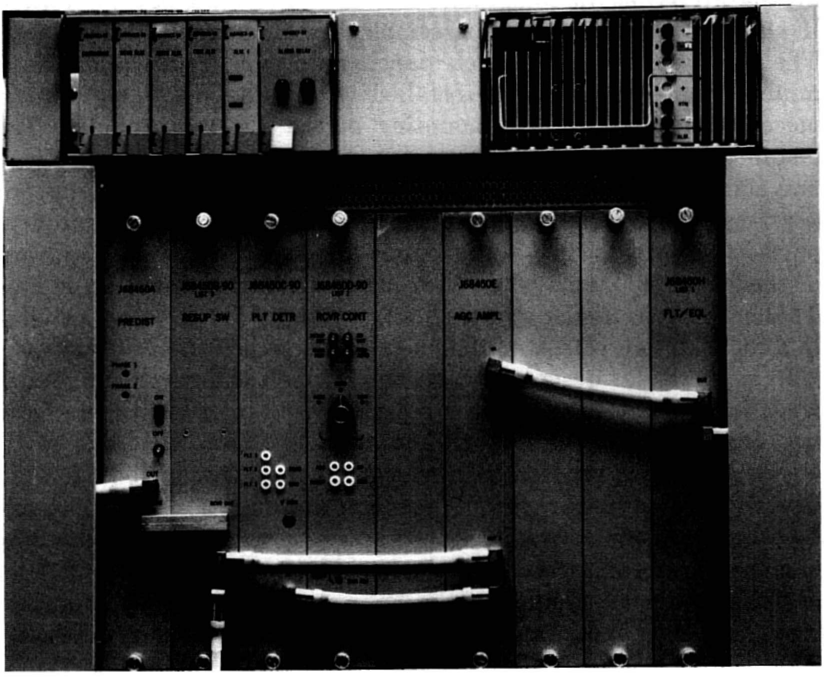

Fig. 4— IF shelf assembly.

of sheet metal fabrication and assembly techniques. Access to the bay framework mounting and the bay cabling is provided by hinged side panels.

A manufacturability cost study showed that for the IF circuits a few large integrated units would be more economical to produce than many smaller units. An electrical and physical partitioning of the receiver IF circuits was achieved based on this study. The block diagram of the receiver IF circuits is shown in Fig. 5. Each of the dashed blocks represents an identifiable circuit function. These circuit functions have been packaged as individual modules: filter/equalizer, dynamic equalizer, Automatic Gain Control (AGC) amplifier, receiver control, pilot detector, and resupply switch. A spare plug-in space is available for future needs. Further description of these modules is found in Ref. 1.

IV. TECHNOLOGY SELECTION

The single most important physical design requirement is that the manufactured product be capable of meeting the AR6A System performance requirements. Therefore, a suitable design technology must be selected for each circuit module that will allow us to meet the individual performance requirements. The choice of design technologies affects the basic partitioning of the circuit functions into physical modules and the total volume needed to realize an equipment design concept. The evaluation of the design technology to implement any circuit function was based on an engineering estimate of: (1) the technical risk factor to achieve the performance requirements, (2) the anticipated cost to manufacture, and (3) the expected reliability.

4.1 Circuit implementation

Circuit linearity is one of the most important of the AR6A performance requirements. The traveling-wave tube was selected for the critical RF amplifier function with the assurance that its inherent nonlinear, third-order characteristic could be controlled and then compensated by predistortion. The performance requirements for the three modulators (receive, shift, and transmit) could be met using modified versions of waveguide structure designs previously used in TH-3 radio.[2] Existing waveguide-based designs were selected as the technology for most of the remaining RF circuit functions. These selections were based on the technical risk confidence factor, performance, and on economic compatibility with the RF section equipment concept. For example, waveguide filters have less loss than dielectric resonator-type filters.

Key elements in the IF circuitry were developed in printed circuit board technology using discrete components. Computer-aided design

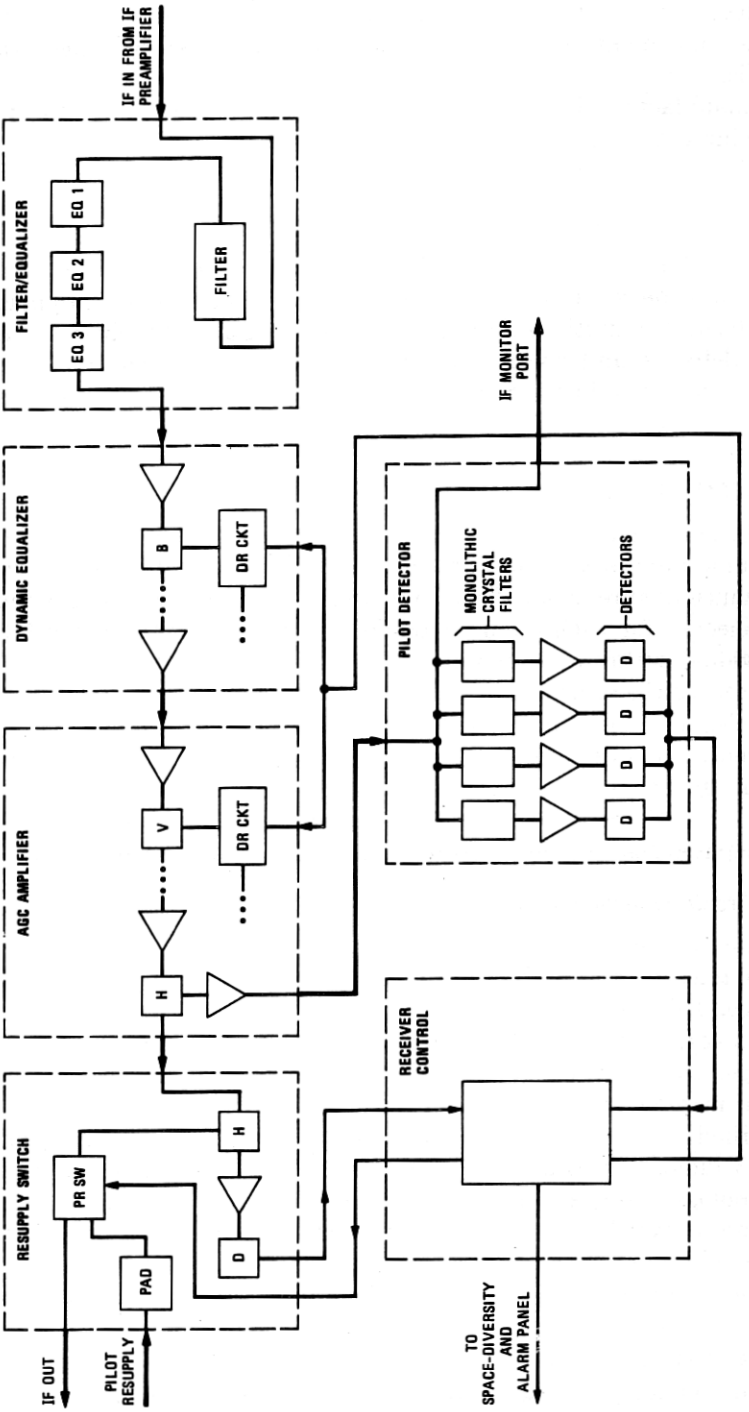

Fig. 5—Receiver IF circuits.

facilities were used to document the critical layout geometries which are characteristic of IF circuits. The performance requirements in the IF circuits were met with amplifier designs based on a hybrid-transformer feedback-transistor stage biased for linear operation. Magnetic components and crystals needed in the IF frequency range were most compatible with the use of printed circuit board technology.

4.2 Mechanical implementation

A technology selection of a different kind was applied to the design of the mechanical piece parts that make up the housings and structures of the AR6A radio-line equipment. The cost of these parts and the labor to assemble them together make up a significant fraction of the total equipment cost. The economics of providing and assembling the mechanical parts is a function of the number of units to be produced. Typically for the radio-line product lines the number of units is not very large, and we use existing manufacturing facilities and tooling wherever possible. Aluminum die castings are used for the microwave assemblies to achieve the required close tolerance forms at relatively low cost due to the reduced need for secondary machining. Aluminum extrusions were utilized as linearly shaped raw material for fabrication into the IF circuit housings. These extrusions can be combined to form electrically isolated compartments within the same plug-in housing. Dip brazing techniques were used to seal those compartment sections that were particularly sensitive to Electromagnetic Interference/Radio Frequency Interference (EMI/RFI) leakage. Close tolerance stamping and forming of sheet metal provides an economical method of creating structural members and parts for the shelf assemblies.

V. THERMAL DESIGN

The critical importance of thermal design to the operation of electronic circuits should not be underestimated. The operating temperature of the components in a circuit affects the performance of the circuit as well as its reliability. The primary objective of thermal design is to maintain the individual circuit components within the temperature limits necessary to achieve circuit performance and reliability objectives. The component temperatures will be determined by: (1) the amount of heat generated by the components, (2) the thermal impedance (°C/watt) between the components and the local ambient, and (3) the local ambient temperature. The thermal environment for the AR6A radio-line equipment is the moderately controlled interior of the radio station. The ambient temperature in a typical, nonair-conditioned, but heated, radio station may range from +4°C (40°F) to +49°C (120°F), depending on the region of the country and the season of the year. It is the upper end of this temperature range that concerns us the most, although some unusual problems may occur at low temperatures.

5.1 Thermal management

Thermal management is a design coordination method that economically achieves the thermal design objectives of the individual circuit modules within the design intent of the overall equipment concept. The thermal aspects of the AR6A radio-line equipment concept were a result of design considerations taken from two perspectives. A total assembly view arranges the circuit modules within the equipment framework to minimize the surface temperature rise of the modules above the station ambient. As part of the initial allocation of physical space within the AR6A TR bay and TR support bay, the thermal design requirements of the individual modules were important decision parameters. The individual module view considers the circuit components as heat sources and devises low thermal impedance paths to the local ambient surrounding each module. In both views physical separation of major heat sources was used to reduce the effects of localized heating on adjacent parts. Potential hot spots were identified by estimating the heat load per volume from the circuit and component information. Natural convection techniques dominate the AR6A radio-line thermal management plan in the total assembly view. In the individual module view, conduction and radiation are combined with natural convection to meet the thermal design objectives. These passive techniques are preferred over aided thermal techniques, such as fans, because of their inherent reliability and no additional energy requirement. Another aspect of the thermal management plan was the design influence directed toward energy efficiency. By reducing the power requirements for the individual circuit designs, we reduced the thermal design heat load as well.

5.2 Thermal design concept

Due in large measure to the thermal management influence, the volume of the AR6A radio-line equipment framework is large enough to rely on natural convection for cooling the component modules. The thermal management plan for the TR bay is to induce air from the station to enter and flow around or through the modules. Conduction paths between the modules and the mounting bracketry aid in effectively increasing the surface area for the ultimate convection heat transfer to the station ambient. The open expanse of the middle RF section allows air from the station to circulate around the waveguide components. Some of this air is drawn up and through the IF shelf, while the rest of the air mixes back into the station ambient. The purposeful up-front position of the TWT provides for an almost direct free-convection transfer of heat to the station ambient. Equipment mounted in the lower housing is cooled by the air that enters through openings in the lower cover, circulates, and then exits up into the rear of the RF section. For the relatively lightly loaded TR support bay, the plan was to design for natural convection from the module faceplates as the principal heat transfer mechanism. Some airflow is induced into and through the shelf assemblies for added heat dissipation.

5.3 Thermal design of modules

The thermal design of each circuit module must be compatible with its other functional requirements. An ideal application of natural convection cooling would be to have the individual circuit components located within unimpeded natural airflow paths. However, because of EMI/RFI requirements, many of the AR6A circuit modules are constructed with completely closed housings. In these modules the power densities are low enough that we can use passive internal heat transfer mechanisms to provide adequate thermal paths. Special attention was paid to the localized hot spots to assure low thermal impedance paths to the outer housing. With a large surface area relative to the thermal load, the heat from these modules can be transferred to the local ambient with a small temperature gradient.

5.4 Special thermal considerations

The largest single heat source in the TR bay is the traveling-wave tube used as the transmitter RF amplifier. Most of the energy in the electron beam is converted into heat at the collector end of the TWT. A critical operating requirement for the TWT is to maintain the temperature of the glass-to-metal seal at the collector below 150°C. This requirement was successfully met by a carefully designed conduction path from the collector to an external-finned heat sink. The thermal impedance between the TWT heat sink and the local ambient was minimized by choosing the optimum fin spacing permitted within the physical space allocated to the TWT.

When a thermal design requirement specifies that a component is to be operated within a narrow temperature range, it may be necessary to control the component's temperature above the ambient temperature by the addition of heat. Several of the frequency-controlling crystal oscillators in the AR6A radio-line equipment are temperature stabilized with thermally insulated oven units. The insulation provides a relatively high thermal impedance path to reduce the heating energy requirements. The control circuit of the oven is set to add no heat at the maximum expected ambient temperature and the full output at the minimum expected ambient temperature.

Two of the closed housing IF modules, the dynamic equalizer and the AGC amplifier, required additional thermal design treatment. Both these modules were provided with perforations on the top and bottom of their frames to allow air to circulate through them. The size of these perforations was selected to use the cutoff waveguide effect to minimize the EMI/RFI leakage. The AGC amplifier dissipates approximately 30 watts of power, mostly from 15 discrete transistors. A vertically finned heat sink has been integrated into the design of the frame for this module. A low thermal impedance path between the discrete transitors and this heat sink is described in the next section.

5.5 Heat-dissipating device

One of the most important circuit designs used in the AR6A System is an IF amplifier stage with very stringent amplitude linearity requirements. To achieve the required linearity, each transistor is biased with a relatively large collector current. Two watts of transister bias power that is converted to heat must be dissipated while the junction temperature is maintained below 125°C. The internal thermal impedance between the junction and the external package of the transistor is 30°C/watt. A patented conduction path package[3] has been devised for this application. Figure 6 shows a cross-section of the heat-dissipating assembly. The purpose of this assembly is not only to provide a low thermal impedance between transistor header and external heat sink but also to provide a means to connect several devices mounted on a printed circuit board to a common heat sink.

The assembly consists of a cylindrical tellurium-copper body, a phenol fiber insulator, a curved stainless steel washer, and a brass ferrule. The body consists of two annular seating surfaces, or "shelves," on the inside surface. The lower shelf provides contact with the transistor, while the upper one provides a stop for the ferrule. Two diametrically opposite pins on the bottom surface of the body engage holes in the printed circuit board to provide rotational locking. The ferrule compresses the spring washer, which exerts a controlled axial force through the insulator to the transistor and, thus, provides a uniform contact pressure between the transistor header and the copper body. A selective indium plating on the inner surface of the body forms a soft interface to improve thermal contact resistance. The insulator provides electrical insulation between the transistor cover and the copper body. The ferrule has a tapped hole for assembly to the common heat sink. It seats on the upper shelf of the body when assembled. An annular groove in the top of the ferrule provides a cylindrical surface for grasping the ferrule during assembly. The outer perimeter of the top of the ferrule is chamfered so that the body may be crimped over for locking. An internal groove in the body simplifies crimping. The

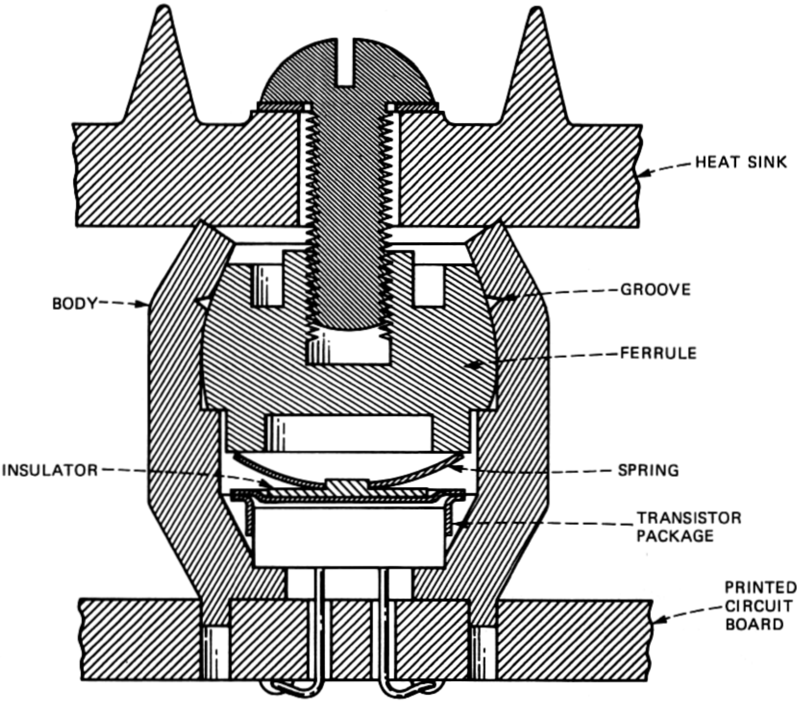

Fig. 6—Heat-dissipating assembly.

tapped hole in the ferrule is "blind" to ensure that the inadvertent use of a long screw does not damage the transistor and to keep metallic debris out of the assembly. When assembled, the ferrule is recessed slightly below the top of the body to provide consistent annular thermal contact between the body and the heat sink.

The material chosen for the body is copper alloy 145. It has high thermal conductivity and good machinability. The free-machining brass of the ferrule is excellent for screw-machine production. Most of the components are designed for screw machining for low-cost production. An assembly fixture presses the ferrule into the body and crimps the body over in a single operation. It also aligns the three transistor leads and two antirotation pins during assembly.

VI. ADDITIONAL DESIGN CONSIDERATIONS

Every product line has a set of standard physical design criteria that all products are expected to meet. Included among these criteria, which have also been applied to the design of the radio-line equipment, are minimum requirements for structural integrity, shock and vibration, and materials selection for nonflammability and corrosion protection.

Beyond these criteria are the special physical design considerations for electromagnetic interference, human factors, and appearance.

6.1 Electromagnetic interference/radio frequency interference

A continued awareness of the potential electromagnetic and radio frequency interference (EMI/RFI) problems was maintained throughout the physical design process. To prevent unwanted signals from propagating into the radio-line circuits, careful attention was placed on the application of interference suppression techniques. Closed conductive housings were used for the sensitive modules and low-pass filters were applied to their dc power and control leads. Grounding locations, and the integrity of those grounds, were particularly reviewed. Wiring and cabling paths were planned to minimize the possible radiated pickup of other signals. These requirements were purposefully blended into the physical fabrication objectives of the modules.

6.2 Human factors

Human factors is a physical design consideration that includes all the interfaces a product may have with people. Of these interfaces, the most important one is safety and personnel protection. Both defined objective safety criteria and subjective value judgments were applied to design details ranging from interlocked high-voltage compartments to the removal of sharp edges and corners from exposed surfaces. Another human factors concern was the operation and maintenance aspect of the radio-line equipment. Panel and faceplate displays should be easily seen and understood by operating personnel, and normal access to the equipment should be unobstructed. On the TR and TR support bays all the important display features have been assigned to favorable eye-zone regions. The AR6A radio-line equipment has been designed for access completely from the front of the bays. Test equipment access points have been brought to front-facing surfaces, and the circuit modules are easily replaced as a part of the modular assembly concept.

6.3 Equipment appearance

Appearance or visual appeal was an important design consideration in the development of the AR6A radio-line equipment. While appearance may not be the final factor in judging any equipment design, first impressions are often lasting impressions. A harmonious design is easier to work with and is given more care by operating personnel. Good design appearance in the radio-line equipment was achieved by incorporating balance into the size, the shape, and the placement of the circuit modules. The same planned attention to detail was applied to the design of the circuit modules to provide functional visual appeal. Color has been used with the radio-line equipment where appropriate to enhance the visual effect. Aesthetically pleasing designs need not be at odds with any other design requirements. Rather, the ultimate objective in physical design is to create simple, but truly elegant, designs.

VII. STATION ARRANGEMENTS

The most economical application of AR6A is to overbuild established TD microwave radio routes. Existing building floor space and facilities, as well as the microwave antennas and towers, can be further utilized at minimal incremental cost. The physical size of the AR6A TR bays was determined with this specific overbuild objective in mind.

7.1 Repeater station—frequency diversity

AR6A uses the same channelization plan as does the TH-3 Microwave Radio System.[4] At a repeater station the two RF signal polarizations in each direction of transmission result in four lineups of four TR bays each. In addition, one TR support bay is required at each station with up to a maximum of 16 TR bays per route. The TR support bay is constrained to be located within 40 cabling feet of any TR bay so that the pilot resupply tone signals may be provided to each TR bay at the same power level.

A typical AR6A repeater station floor plan layout is shown in Fig. 7. Since the radio-line equipment has been designed for front access, the radio bay lineups may be placed against a wall or back to back with another radio bay lineup. The empty bay position opposite the

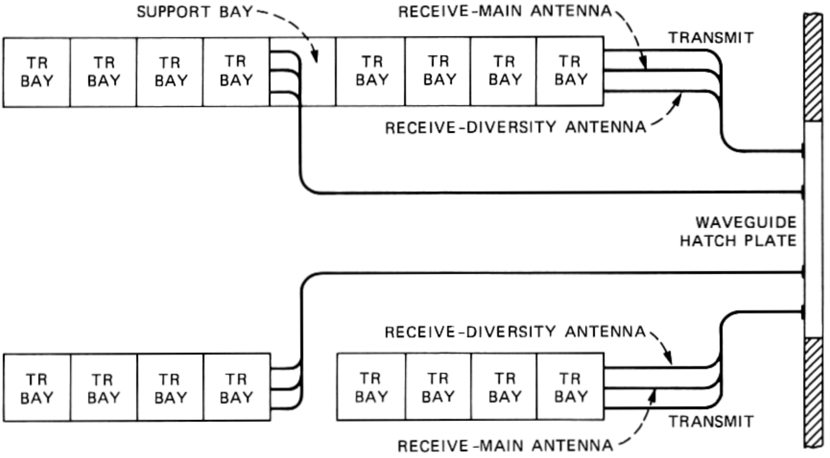

Fig. 7—Floor plan layout for a typical AR6A repeater station.

TR support bay is maintained to provide E-W and W-E channel symmetry across the aisle for operating clarity.

The indoor waveguide arrangements are similar to those used in TH-3. When space diversity is applied there will be three indoor waveguide runs (transmit, main receive, and diversity receive) connected to each bay lineup. To minimize the frequency shift of waveguide filter cavities, dry air is supplied from the station dehydrator using the indoor waveguide for distribution to the TR bays. The indoor waveguide is routed above the bay frameworks and brought down to the 5-1/4 foot level of the channel filters at the end of each TR bay lineup. The common channel RF preamplifiers are mounted in the receive waveguide runs at the top of the first bay in the lineup. Either right-hand or left-hand feed direction is permitted due to the mounting of the channel filters on the TR bay center line. Space has been allocated in the upper section of the TR support bay to allow the indoor waveguide to pass behind the upper side covers. RF connections between the channel filters of adjacent radio bays are made using 4-inch sections of flexible waveguide. Alignment of these connections is made possible by having the radio bay frameworks bolted together through factory-fixtured brackets on the basic bays. Low-pass power filters, which reduce any 60-Hz and harmonic tones from the –24 volts dc power feeds, are located in each bay at the 8-foot level. A photograph showing the AR6A radio-line equipment installed in the Hillsboro, Missouri station is shown in Fig. 8.

7.2 Repeater station—hot standby

When the forecasted channel growth does not permit a frequency-diversity route plan, a hot-standby arrangement is required. Figure 9 shows a hot-standby floor plan for a typical repeater station with one working channel in each direction of transmission. A single standby TR bay protects the two opposite direction regular channels from equipment outage. The receive RF signal paths from the main antenna are split in couplers to provide the inputs from two transmission directions to the standby bay. The microprocessor-based hot-standby control unit, mounted in the TR support bay, controls the selection to an RF switch in the standby bay. The transmit output from the standby bay is split in a coupler above the standby bay and the same transmit signal is sent to another RF switch in each of the regular TR bays. This switch, also under control of the microprocessor controller, determines whether transmit signal from the regular or the standby bay goes out to the antenna. Space diversity may be applied to a hot-standby arrangement but only on the regular TR bays. An additional working channel would share the common receive RF paths but would require a duplication of the other equipment required for the first

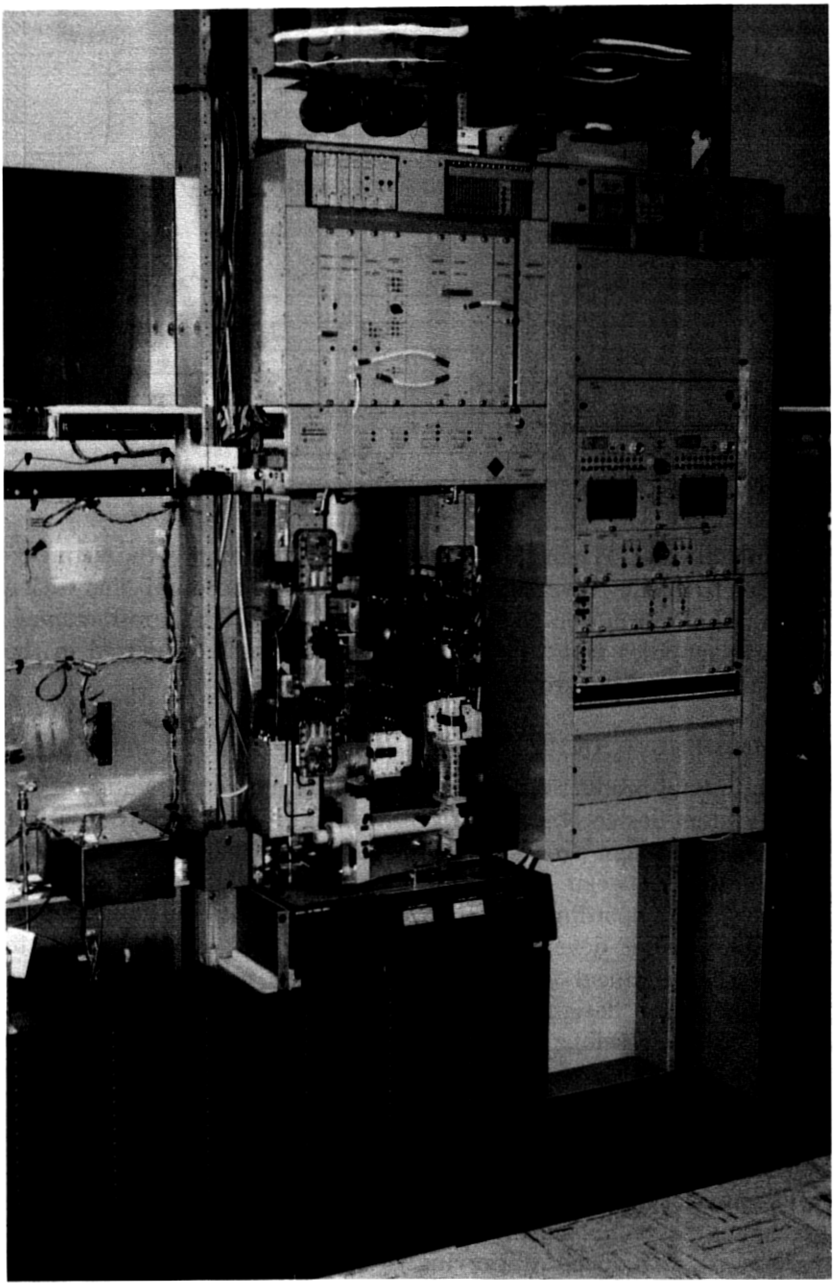

Fig. 8—AR6A radio-line equipment installed at Hillsboro, MO.

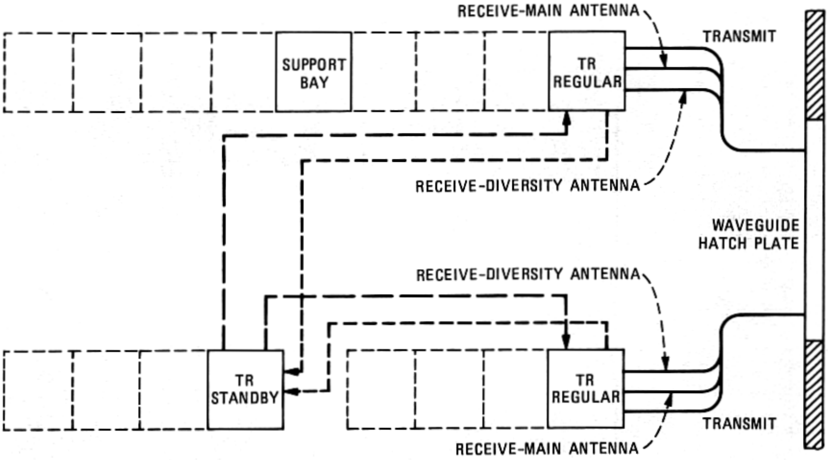

Fig. 9—Hot-standby floor plan layout for a typical AR6A repeater station.

working channel. When there is sufficient channel growth, a conversion to a frequency-diversity arrangement can be accomplished with a minimum of disruption to the working channels. The nonfrequency-sensitive modules from the standby TR bays may be reused in the field assembly of the growth channel TR bays.

VIII. FINISHING TOUCHES

A successful product design is the result of a careful balance of the many system design objectives. Maintaining that balance throughout the physical design process called for increased emphasis on design coordination between the many engineers involved in this major project. Design coordination has become an area of increasing importance in product developments to evaluate design alternatives, to reduce the technical risks, and to keep the project on schedule. Throughout the design cycle of AR6A many formal and informal design review sessions were held to monitor design status and to maintain continuity with the overall design concept. For convenience in keeping all the design engineers informed, the documentation of the equipment design concept was maintained in the format of size-and-feature outline control drawings.

The physical design of the AR6A radio-line equipment will continue to change as technologies improve and new system concepts and circuits are introduced. Improving the product has always been part of the physical design process. In the design of this equipment we have tried to anticipate these future changes so that the physical design modifications may be accomplished gracefully.

It would be unusual in our modern world of design if a complex product, such as AR6A, were created by a few individuals. In addition to the many individuals who were involved in the project, we would like to acknowledge in particular the contributions made by R. E. Caron, G. B. Gregoire, T. Kuliopulos, and L. F. Travis.

REFERENCES

1. N. D. Burgess, R. C. McLean, G. J. Mandeville, D. I. McLean, M. E. Sands, and R. P. Snicer, "The AR6A Single-Sideband Microwave Radio System: Equalization for Multipath Fading," B.S.T.J., this issue.
2. O. Giust, "Modulators," B.S.T.J., *50,* No. 7 (September 1971), pp. 2155–73.
3. P. D. Patel, "Heat Dissipating Assembly for Semiconductor Devices," U.S. Patent 4,167,031, issued September 4, 1979.
4. R. M. Jansen and R. C. Prime, "System Considerations," B.S.T.J., *50,* No. 7 (September 1971), pp. 2085–2115.

AUTHORS

Stephen A. Harvey, B.S.M.E., 1964, Worcester Polytechnic Institute; M.S.E.M., 1966, New York University; M.S. (E.E.), 1980, Northeastern University; Bell Laboratories, 1964—. Mr. Harvey has worked on a variety of physical design assignments in the microwave radio area. He is currently involved in the systems design of digital microwave radio. Member, Tau Beta Pi.

Parbhubhai D. Patel, B.E. (Mechanical Engineering), 1962, M. S. University, at Baroda, India; M.S. (M.E.), 1963, and Engr. Sc. D. (M.E.), 1968, Columbia University; Bell Laboratories, 1969—. Mr. Patel began his career at Bell Laboratories in the Transmission Technology Laboratory. Since 1979 he has worked in the Lightguide Cable design and development area. Member, A.S.M.E.