OKIDATA

PERSONAL PRINTER USER'S MANUAL

MICROLINE 92 and 93 Printers

Note To The User

This manual has been written to help you install and use your new OKIDATA printer. Our goal was to explain clearly and simply everything you need to know in order to take full advantage of the Microline 92 and 93's many special features. If for any reason you need additional assistance after reading this booklet, please contact your dealer for fast, personal service. If your dealer cannot answer your questions, please call us at: 609-235-2600, and ask for Technical Support.

Every effort has been made to insure that the information in this document is complete, accurate and up-to-date. OKIDATA assumes no responsibility for the results of errors beyond its control.

OKIDATA cannot guarantee that changes in the software and equipment made by other manufacturers and referred to in this book will not affect the applicability of the information in it.

Copyright© 1983 by OKIDATA Corporation.
All rights reserved, including the right to reproduce this book or portions thereof in any form.
Revised edition September 1983

MICROLINE 92 AND 93 PERSONAL PRINTERS USER'S MANUAL

TABLE OF CONTENTS

Page

1. SETTING UP 5
   - Unpacking 6
   - Getting Acquainted 12
   - Running Solo 12
   - Self Test 21

2. CONNECTING YOUR PRINTER 25
   - Matching Requirements 26
   - Closing Up 33
   - Wrapping Up 35

3. RUNNING WITH YOUR COMPUTER 39
   - Loading Paper 41
     - Individual Sheets 41
     - Roll Paper 41
       - Installing Stand 43
     - Sprocket Paper 46
       - Installing Tractor Unit 46
       - Removing Tractor Unit 46
       - Using Sprocket Paper without tractor unit (ML92 only) 48
       - Using Sprocket Paper with tractor unit 50
     - Paper Adjustments 56
   - Indicator Lights and Control Buttons 58
     - Adjusting Paper 59
     - TOF Set Button 59
     - Form Feed Button 59
     - Line Feed Button 60
     - Form Length Selection Dial 60

4. BELLS AND WHISTLES 63
   - Using a Software Package 65
   - The BASICs 67
   - A Word About Notation 75
   - Character Sizes 76
   - Correspondence Quality and Data Processing Printing 78

TABLE OF CONTENTS (Continued)

Page

Character Spacing (Correspondence Quality only) 80
Line Spacing 82
Emphasized and Enhanced Printing. 84
Underlining 85
Superscripts and Subscripts. 86
Form Length, Top of Form, and Form Feed. 87
Direct Line Skip 89
Vertical Formatting. 90
Setting the Left Margin 94
Horizontal Tabs. 96
Character Column Tabs. 96
Dot Column Tabs 98
Summary. 99
Indenting. 101
Carriage Return and Line Feed 103
Cancel 104
Print Suppress 105
Custom-Designed Characters 106
Downline Loadable Character Generator. 106
APA Graphics 112

5. MAINTAINING YOUR PRINTER 121
Troubleshooting 121

APPENDICES

A. Making a Parallel Interface Cable. A-1
B. Setting The High Speed RS232-C Interface Switches B-1
C. Making an RS232-C Interface Cable C-1
D. Interface Connections and Switch Settings for Popular Computers D-1
E. Dot Patterns E-1
F. ASCII Character Code Chart F-1
G. Control Code Quick Reference Chart G-1
H. Specifications H-1

GLOSSARY

INDEX

STANDARD FEATURES

160 cps bidirectional printing
Fast throughput — more printing can be completed in less time.

Emphasized and enhanced printing at 80 cps
Highlights data for better comprehension.

Correspondence Quality printing at 40 cps
High quality printing for your most important documents.

Short-line seeking logic
Buffer looks ahead at next line of data — determines where to start printing the next line in order to save printing time.

9-pin stored energy printhead
Allows printhead to print at a faster rate using less power. Extends the printhead life to 200 million characters.

Printhead temperature check
Automatic switch to unidirectional printing to allow printhead to cool down. Printer halted if necessary. This feature also helps extend printhead life.

Full 96 character ASCII set

Lower case characters with descenders
Prints lower case characters with true descenders (g j p q y).

Downline Loadable Character Generator (DLCG)
Create special characters (standard or descender) for special needs.

Three font sizes: 10 cpi, 12 cpi, 17.1 cpi
Suit the character size to the data. At 17.1 cpi, the Microline 92 prints up to 136 characters per line, and the Microline 93 prints up to 233 characters per line.

Double width characters
Permits emphasis for headlines or titles.

Superscripts and subscripts
Makes it easy to print footnotes and formulas.

Continuous Underlining

APA Graphics
Creates high-resolution illustrations.

Electronic Vertical Format Unit (VFU)
Permits you to pre-program up to 12 sets of vertical tab positions.

Horizontal Tabulator
Allows up to 16 tab stops. Tabs can be set either in dot column or character mode.

6 and 8 lines per inch – program-controlled
Optional line spacing to permit more printing per page.

Self Test
Insures unit is printing correctly without computer control.

Versatile paper handling
For both printer models, friction and tractor feed (an option for the Microline 92) permit printing on single sheet paper or sprocket hole forms of various widths; continuous form paper can be fed from bottom or rear.

For the Microline 92, its fixed-pin platen allows you to print on 9.5" wide sprocket hole paper without the optional tractor unit, and the optional roll paper stand lets you print on inexpensive roll paper.

Regular paper – up to 4 parts
Capable of printing clear crisp copy first sheet to last.

4,000 hours Mean Time Between Failures
Provides more on-line time for more continuous throughput.

15 minutes Mean Time To Repair
Quick turn-around if repair is needed.

FOR STARTERS . . .

Congratulations on your choice of the MICROLINE 92/93 printer! We at OKIDATA know it will meet your high expectations for reliability, economy, versatility and ease of operation — and we're sure that once you get to know your printer you'll be pleasantly surprised at what it can do.

We've designed this User's Manual to make it easy to set up and run your printer, regardless of how you plan to use it. The manual is arranged so you can read through it quickly for a simple, direct introduction to your printer's operation and then later you can use it for quick day-to-day reference. We've put technical information in the back so it won't get in your way if you don't need it.

Here's how the book is organized. Chapter 1 gets you started. It tells you how to set up and try out your new printer using the built-in "Self Test" feature. You don't even need a computer at this stage, but you do need paper — a small but important detail.

Chapter 2 tells you how to hook your printer up to your computer. For this you'll need the following:

- a computer,
- a phillips-head screwdriver with a shaft at least 4" long, and
- an interface cable

The type of cable you need depends on what kind of computer you have. Your dealer will be able to supply the right one for your computer. If you have the know-how and the inclination to make your own, you'll find the necessary technical information in Appendices A and C.

You'll also need to set a few switches inside the printer so it will work properly with your computer. We've provided settings for many of the most popular personal computers in Appendix D. If yours isn't included, don't panic — your dealer has OKIDATA USERS TIPS to cover other systems.

Chapter 3 tells you how to operate your printer: what the buttons do, what the lights mean, and how to load paper. By the time you've finished that chapter, you'll be able to print out information from a software package in "plain vanilla" – the normal printing your printer is set for when you turn it on.

In Chapter 4 you'll learn all about the MICROLINE 92/93's many special features. We'll show you how they work and how to use them, and walk you through some examples for each one. You'll need an elementary knowledge of BASIC to follow the examples, but if you're not a programmer, don't worry. Most software packages let you use special printing features without programming. The instructions for your software should explain how to do it. Your dealer can assist you with OKIDATA USERS TIPS that provide special hints for a growing number of popular software packages. Experiment a little and you'll see how easy it is to be creative with your MICROLINE printer.

OKIDATA printers are famous for their reliability and durability. Chapter 5 gives you a few simple tips to help you keep your printer running in top form, and tells you how to solve some minor problems if they occur.

Finally, you'll find a number of appendices and reference aids in the back of the book. These give technical details on interfaces, specifications, setup information for popular personal computers, information on the character sets and quick reference charts of control codes and ASCII (American Standard Code for Information Interchange – the "language" your computer uses to talk to your printer), as well as a complete index and glossary to help you out with the jargon.

Take a few minutes to read through this book before you start setting up your printer – you'll feel more comfortable with the procedures if you know where you're headed. We also suggest you check your computer and software manuals for details on how they control printing functions.

If you have any problems not covered here, see your dealer, who can give you fast, personal service. If your dealer can't assist you, get in touch with us –

Technical Support Group
OKIDATA CORPORATION
111 Gaither Drive
Mt. Laurel, N.J. 08054
(609) 235-2600

CHAPTER 1 Setting Up

Overview

You're probably anxious to see your printer perform. Before you connect your printer to your computer, in this section we'll identify some of the printer's external parts and operational controls and tell you how to set the printer up alone to test its operation. All you need is the printer itself, the supplied ribbon, some paper, and an adapter for the power plug if you do not have a grounded electrical outlet. Later on you'll need an interface cable to connect your printer to your computer, but you'll learn all about interfacing in the next chapter.

CHAPTER 1

First of all, select a sturdy surface to place your printer after you unpack it. The printer's "home" should be:

- well-ventilated
- away from direct sunlight
- away from heat-generating equipment
- near your computer (naturally)
- on a slotted printer stand (if you'll be inserting paper from the bottom)

Unpacking Your Printer

Remove the two top sections of the packaging foam.

Carefully lift the printer (with the bottom packaging foam attached) with both hands, and remove it from the carton.

Set the printer down on a flat, sturdy surface.

Remove the packaging material, and remove the printer from its plastic cover.

NOTE: Be sure to save all the packaging material in the carton in case you ever want to store your printer or ship it anywhere.

Make sure that all these items are included in the carton (refer to Figure 1-1):

printer

platen knob (set in packaging foam)

tractor feed unit (Microline 93 standard, Microline 92 option)

ribbon and empty ribbon spool*

spare fuse (2.5 amp)*

*These items are packed together.

IMPORTANT: After you've read this chapter, you'll need an interface cable to connect your printer to your computer. (See Chapter 2 for information on interfacing with your computer.)

If you have purchased the Microline 92 printer, these paper feed accessories are available to you:

- the roll paper stand, OKIDATA Part No. 54132001
- the tractor feed unit, OKIDATA Part No. 54112101

Microline 92

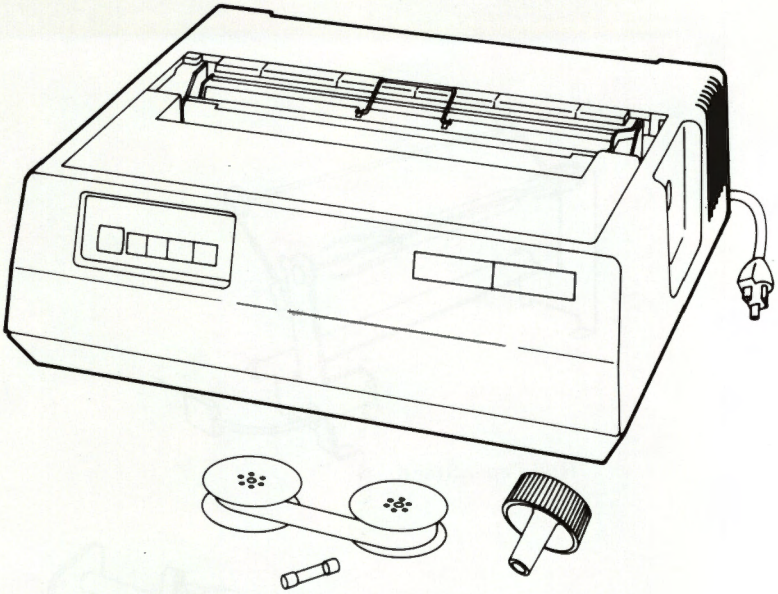

Microline 93

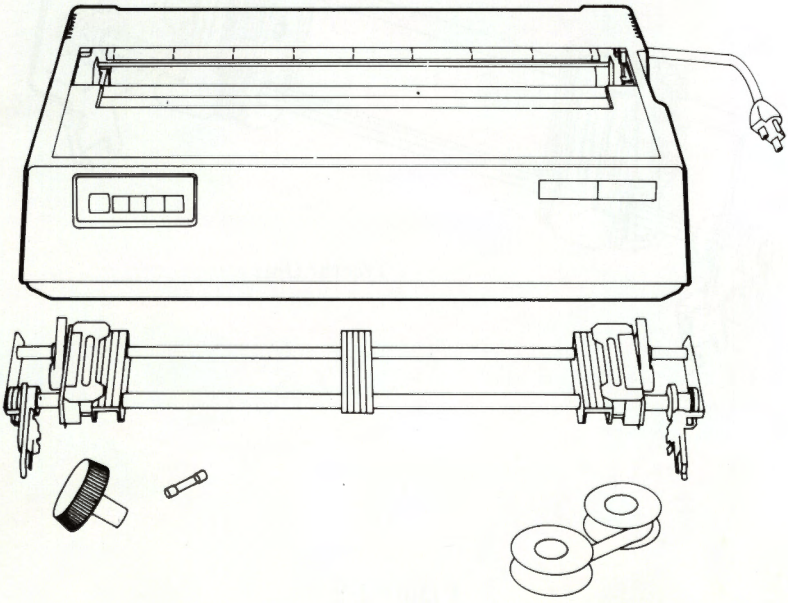

Figure 1-1

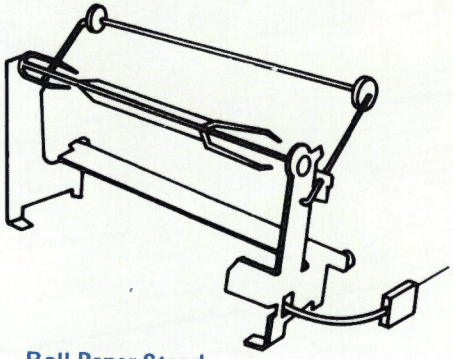

Roll Paper Stand

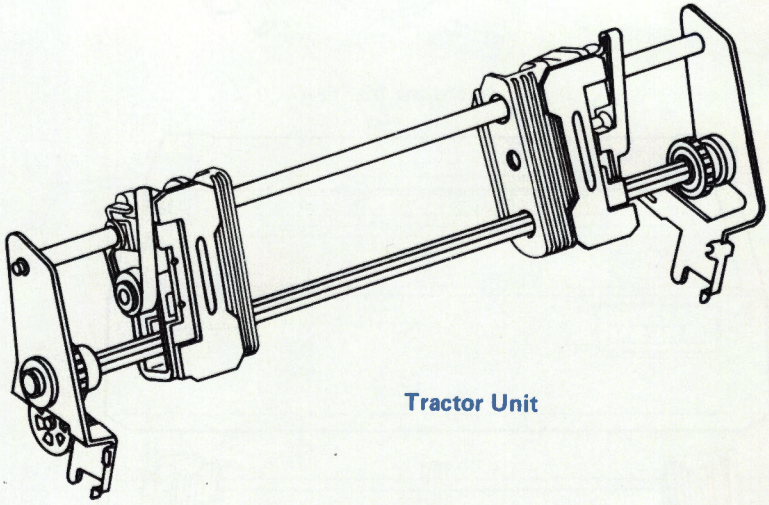

Tractor Unit

Figure 1-2

You'll notice that the printer's power cord has a 3-pronged grounded plug. If you do not have a grounded electrical outlet, you must use a UL-approved grounded adapter that you can purchase at a hardware or electrical supplies store. The printer must always be grounded, so don't use a conversion plug (like an extension cord) which ignores the grounding prong.

Take the platen knob out of the packaging foam, and install it on the printer's right side (there is a hole there for it):

- Match the flat section of the knob with the flat section of the platen shaft, and fit the knob over the platen shaft.
- Press the knob inward until it seats firmly on the platen shaft. Now turn the platen knob to make sure the platen turns.

Remove the shipping tie:

- Open the access cover by pulling it up and out as shown in the figure.
- Remove the shipping tie that holds the printhead in place during shipment (refer to Figure 1-3).

IMPORTANT: Always remember to replace this shipping tie whenever you ship your printer. It secures the printhead in place to protect it from damage.

If you have a 220/240 VAC model, your printer left the factory with 220 V selected. If you want to change the voltage supplied to your printer to 240 V, you'll have to change the position of the Voltage Select Switch:

1. Remove the upper cover by following the instructions on page 27.
2. Locate the Voltage Select Switch on the power circuit board directly behind the power cord (see Figure 1-4).
3. Set the switch to the left side for 230 or 240 V.

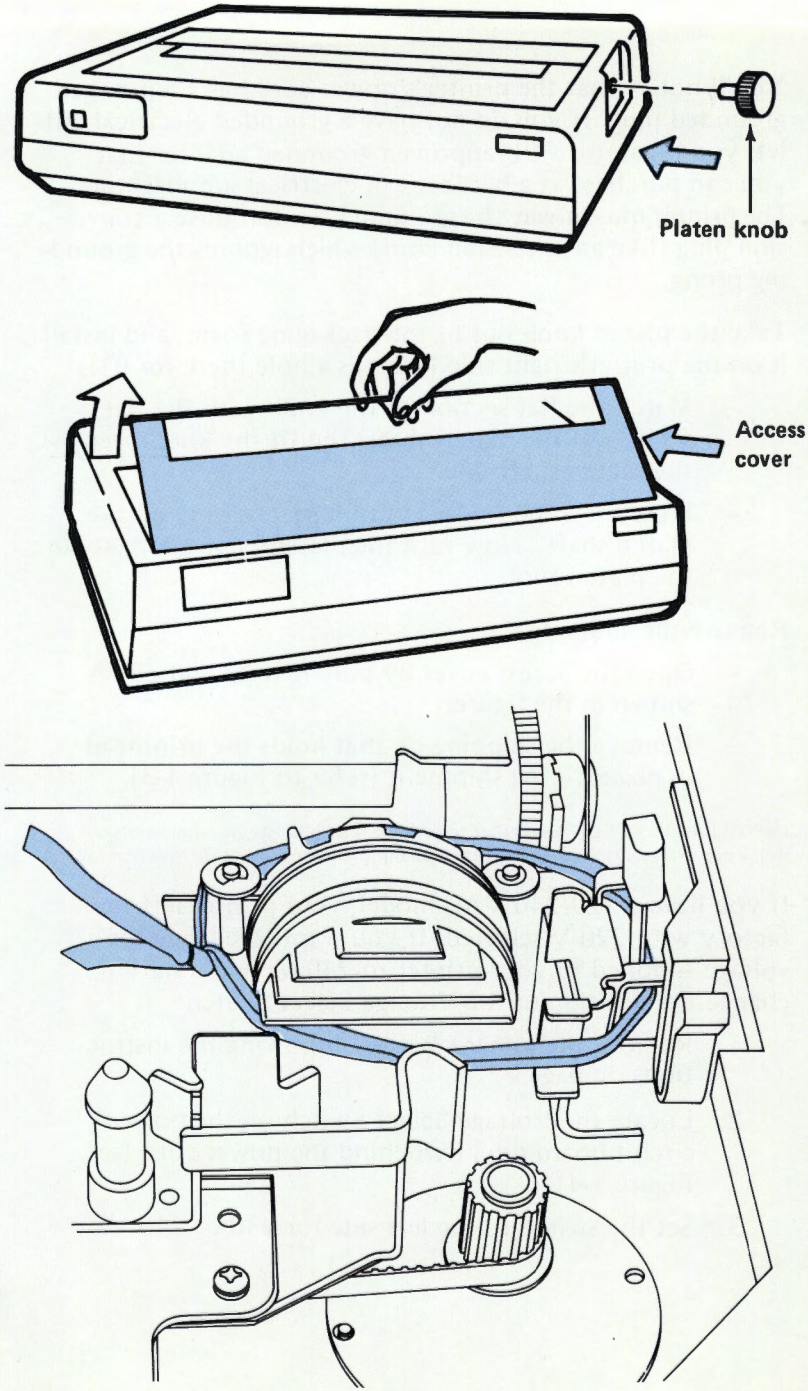

Figure 1-3

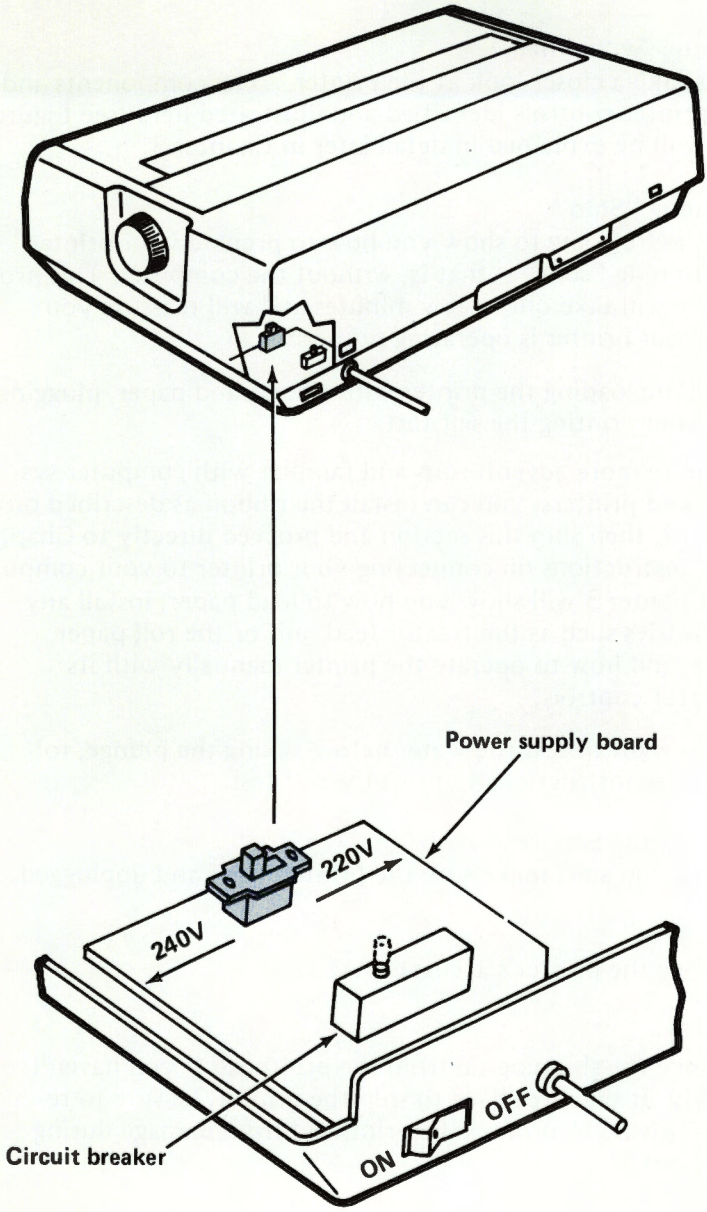

Figure 1-4

Getting Acquainted

Let's take a closer look at the printer. The components and the printer controls identified and illustrated here (see Figure 1-5) will be explained in detail later in Chapter 3.

Running "Solo"

Now we're going to show you how to prepare your printer for running "solo" – that is, without the computer. This procedure will take only a few minutes and will reassure you that your printer is operating properly.

You'll be loading the printer with ribbon and paper, plugging it in, and printing the self test.

If you're more adventurous and familiar with computer systems and printers, you can install the ribbon as described on page 14, then skip this section and proceed directly to Chapter 2 for instructions on connecting your printer to your computer. Chapter 3 will show you how to load paper, install any accessories such as the tractor feed unit or the roll paper stand, and how to operate the printer manually with its operator controls.

If you want to test the water before taking the plunge, follow these instructions to print the self test.

Printing the Self Test

Before you start make sure the printer is off and unplugged.

First–

Remove the printer's access cover.

Second–

Remove the shipping tie from the printhead if you haven't already. If you ever have to ship the printer, be sure to replace this tie to protect the printhead from damage during shipment.

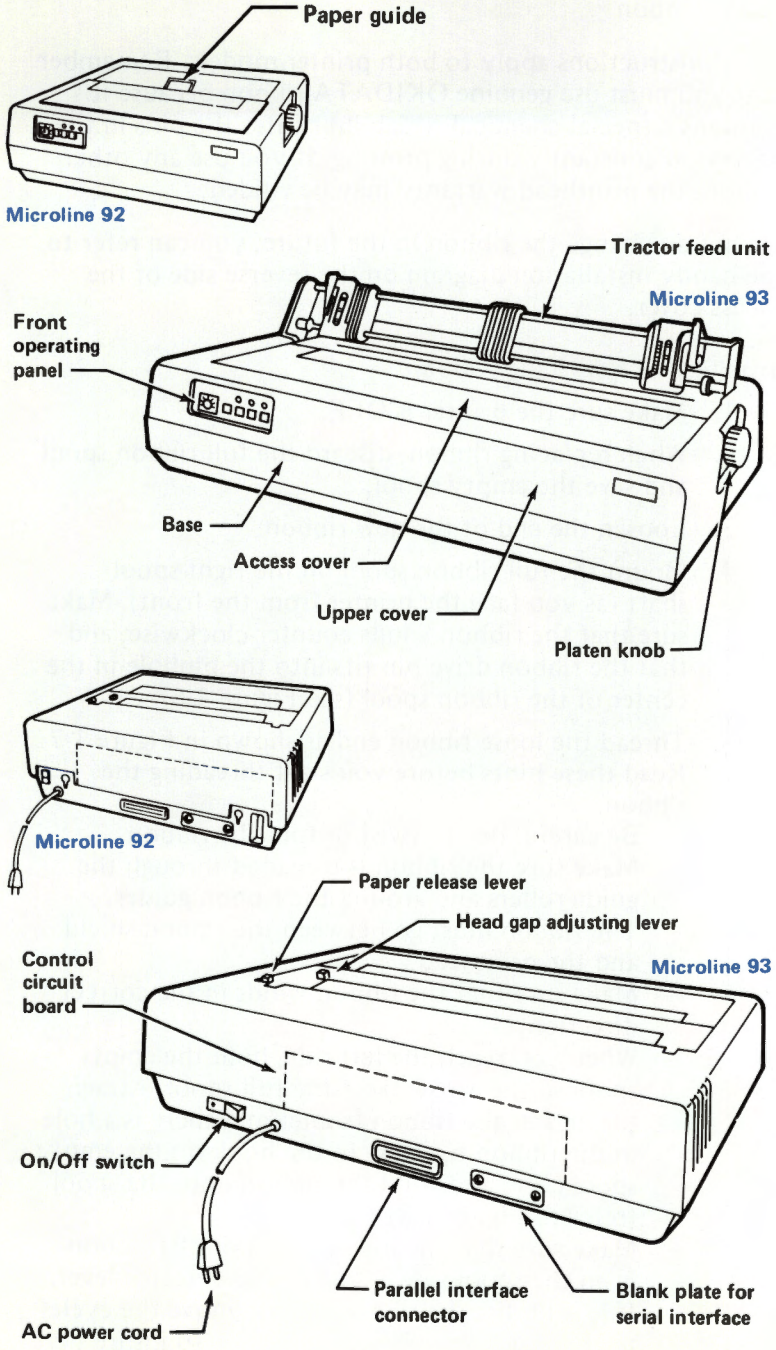
Paper guide
Microline 92
Tractor feed unit
Microline 93
Front operating panel
Base
Access cover
Upper cover
Platen knob
Microline 92
Paper release lever
Head gap adjusting lever
Control circuit board
Microline 93
On/Off switch
AC power cord
Parallel interface connector
Blank plate for serial interface

Figure 1-5

Third–
Install ribbon

These instructions apply to both printer models. Remember that you must use genuine OKIDATA ribbon because it contains a special chemical which lubricates the pins in the printhead constantly during printing. If you use any other ribbon, the printhead warranty may be voided.

When you change the ribbon in the future, you can refer to the handy installation diagram on the reverse side of the access cover.

Installing or Replacing Ribbon:

1. Make sure the printer is OFF.
2. When replacing ribbon, discard the full ribbon spool and save the empty spool.
3. Loosen the end of the new ribbon.
4. Mount the full ribbon spool on the right spool shaft (as you face the printer from the front). Make sure that the ribbon winds counter-clockwise, and that the ribbon drive pin fits into the pinhole in the center of the ribbon spool (see Figure 1-6).
5. Thread the loose ribbon end as shown in Figure 1-7. Read these hints before you start threading the ribbon.
   - Be careful not to twist or fold the ribbon.
   - Make sure the ribbon is threaded through the guide rollers and around the ribbon guides.
   - The ribbon must go between the ribbon shield and the printhead.
   - Make sure that the ribbon winds in the correct direction.
   - When you reach the left side, hold the empty spool so the arrow faces the full spool. Attach the end of the ribbon (sometimes there is a hole in the ribbon for this) to the hook on the empty spool core, and wind the ribbon onto the spool (refer to Figure 1-8).
   - Make sure that the metal eyelet on the ribbon is on the spool side of the eyelet detector lever. If it isn't, lift the ribbon up and move the eyelet to the spool side. This is necessary to insure that the ribbon will change direction when it gets to the end of the spool.

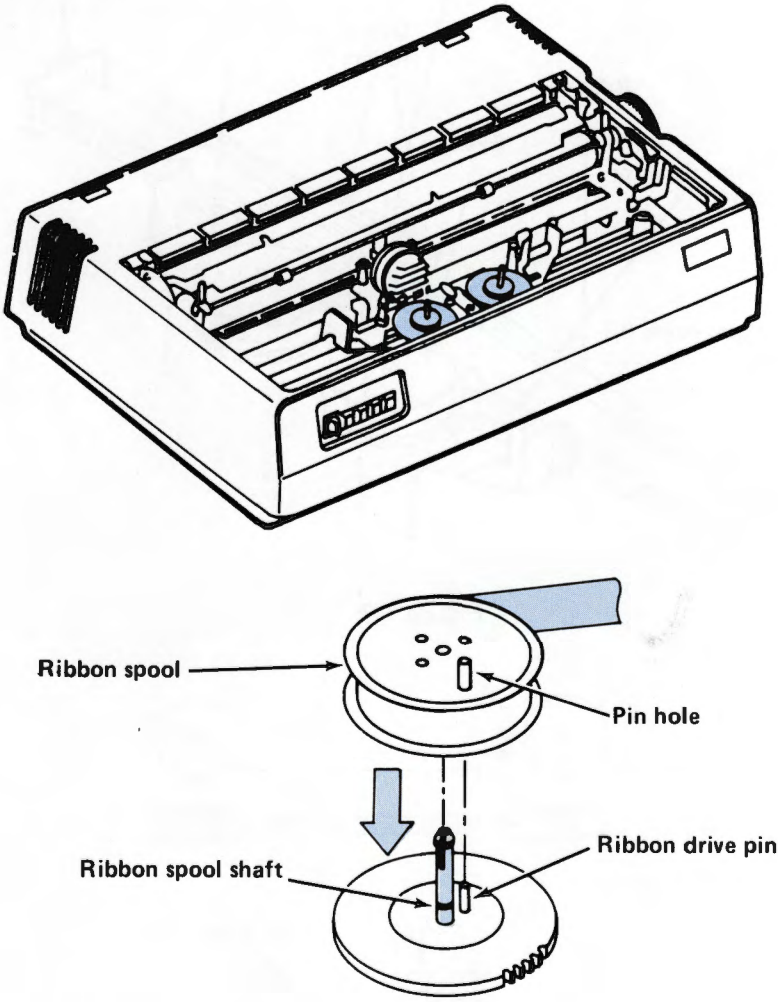

Figure 1-6

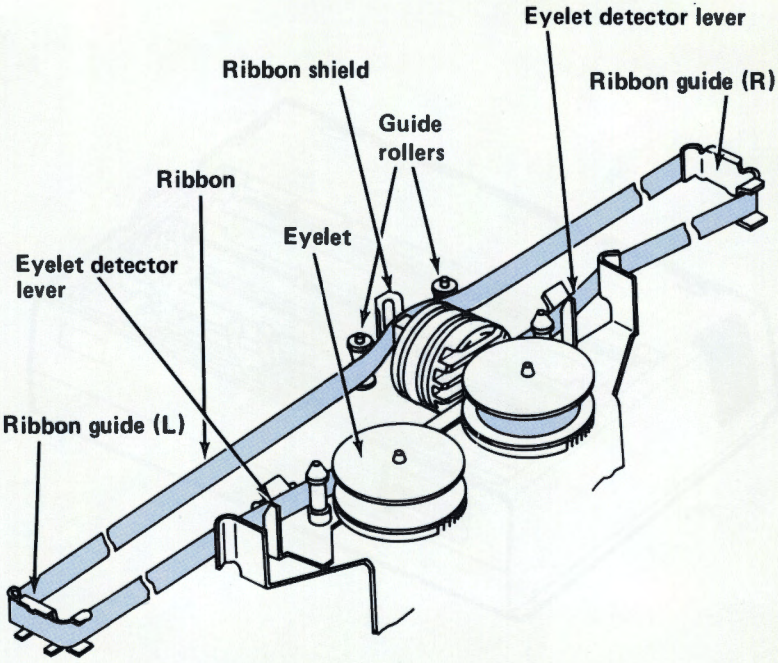

Figure 1-7

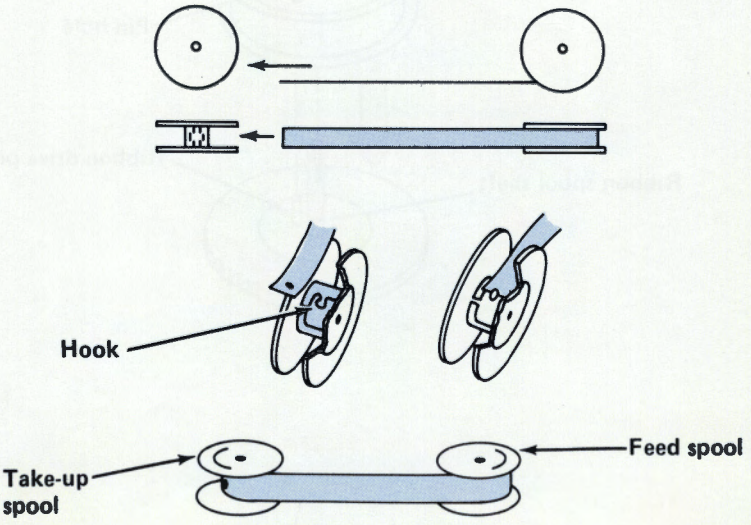

Figure 1-8

6. Mount the empty ribbon spool on the left spool shaft, engaging the pinhole of the ribbon spool with the ribbon drive pin.
7. Adjust the tension in the ribbon by turning the spools.

We recommend that you purchase extra ribbon for your printer. Genuine OKIDATA ribbon is available from your dealer.

CAUTION: Use of any other type of ribbon may void printhead warranty. OKIDATA ribbon is required since it is specially treated with a substance that lubricates the printhead constantly during printing.

Fourth—

Load paper:

NOTE: ML92 owners read section A to load paper. ML93 owners skip to section B on page 19.

A. Microline 92

The Microline 92 can accommodate several types of paper including roll paper, sprocket paper that is either pin-fed or tractor-fed, or individual sheets of paper.

To make things easier and to let you see your printer do its stuff as soon as possible, insert a piece of typewriter paper from the rear of the Microline 92. Once you've seen your printer test itself with the self test, and have connected it to your computer after reading Chapter 2, you can refer to Chapter 3 for instructions on how to insert other types of paper and for information about paper specifications. But for now, let's get your printer rolling as quickly as possible.

Inserting typewriter paper in the Microline 92

If you've inserted paper into a typewriter, you'll have no problem with your printer (refer to Figure 1-9).

First set the head-gap adjusting lever to position 1 and unlock the paper release lever (position 0 = open). See Figure 1-9.

Take one standard sheet of typewriter paper and insert it from the rear of the platen, and push it through until it reaches the front of the platen.

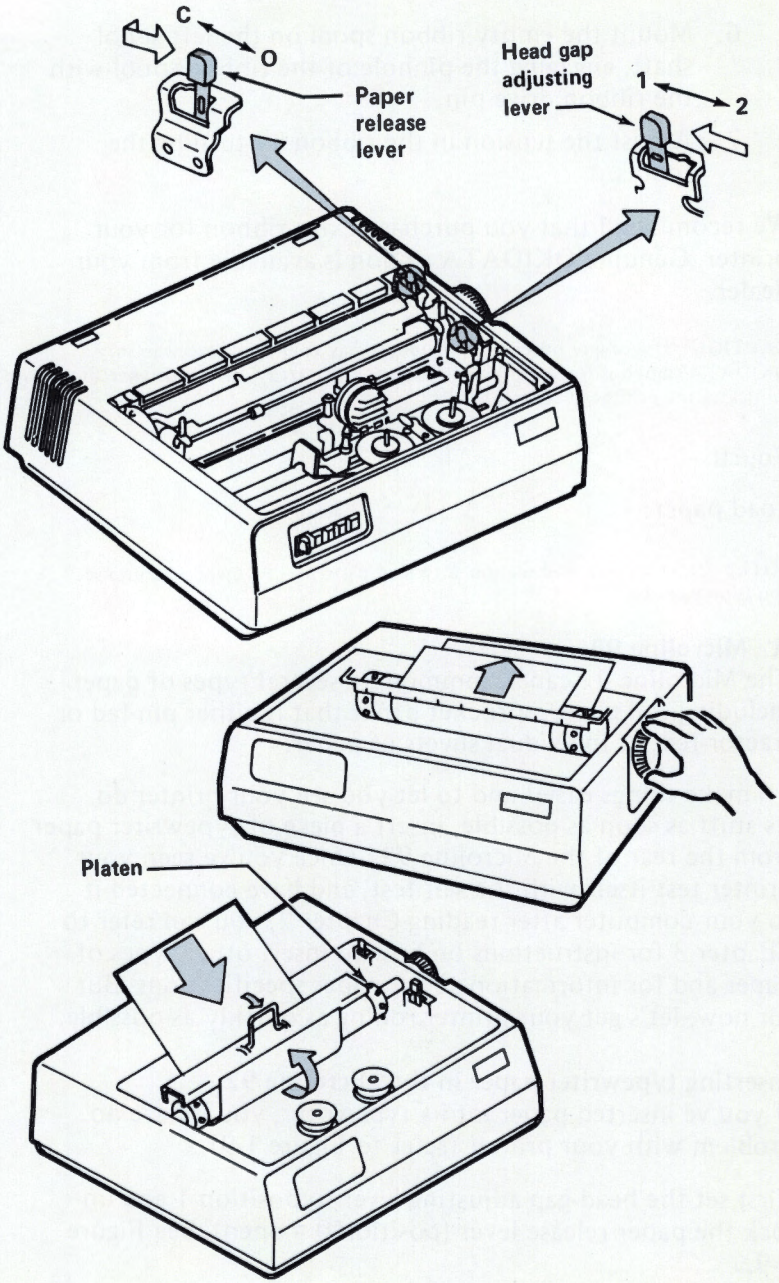

Figure 1-9

Pull the tear-off bar away from the platen, so the paper is fed between it and the platen. Make sure the paper is even, then push the tear-off bar against the platen.

Close the paper release lever (position C = close) and raise the paper guide.

Move the paper to where you want the printing to start by turning the platen knob away from you.

Replace the access cover.

Step back and admire your work, then go to page 21 for the next steps.

Fourth—
Load paper:

B. Microline 93
Since the self test on the Microline 93 is printed over the entire width of the platen, you must use 16" wide (or 132 column) paper. Otherwise the printhead or the platen could be damaged.

For this local print or self test, you can skip the installation of the tractor unit and simply insert one sheet of sprocket paper. Now you'll be feeding the sprocket paper by friction instead of by the tractor unit. Refer to Figure 1-10.
(For continuous printing on sprocket paper, however, we recommend installing the tractor feed unit first as described on page 46.)

Here's what you do:
Set the head-gap adjusting lever to position 1, and unlock the paper release lever (position 0 = open).

Insert the paper from the rear of the platen as you would insert paper in a typewriter, and push the paper through until it reaches the front of the platen.

Pull the column indicator away from the platen so the paper feeds between it and the platen, and push the column indicator against the platen again, while placing the pressure rollers near either edge of the paper.

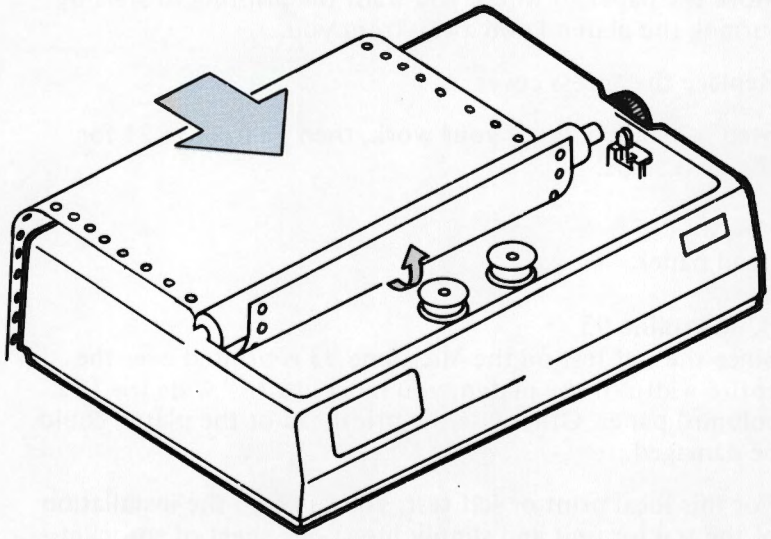

Figure 1-10

Lock the paper release lever (position C = close). This position is usually reserved for friction feed.

Move the paper to the point where you want printing to start by turning the platen knob.

Now that you're ready to roll with ribbon and paper, read the following to see how to run the local print test.

Fifth—

Make sure that the printer's ON/OFF switch is in the OFF position.

CAUTION: Always remember to turn the printer OFF before plugging its power cord into an outlet. Otherwise, a power surge might cause severe damage to the printer.

Sixth—

Plug the printer's power cord into a grounded electrical outlet. The printer must always be grounded.

Seventh—

Turn the printer ON. The SEL and POWER indicators should light up.

IMPORTANT: Don't be surprised when the printhead moves as soon as you turn the printer on. It returns to its "home" (the far left of the carriage) whenever the printer is turned ON.

Eighth—

Run the self test.

CAUTION: Be sure you have loaded the ML93 with 132-column or 16" wide paper, since its print test extends the entire width of the platen.

The test will repeat itself indefinitely until you stop it by pressing the SEL button, or until the printer runs out of paper.

1. Turn the printer OFF.
2. Push the LINE FEED button and hold it down.
3. Turn the printer ON again.
4. Release the LINE FEED button after about two seconds.

5. The printer will print the local print test.
6. Press the SEL button to stop the test.

Here's what the printer will print (Figure 1-11).

The print test shows the 96 standard ASCII characters in a pattern that is printed continuously until you press the SEL button to stop the print test.

Where do you go from here?

Chapter 2 tells you how to connect your Microline printer to your computer.

Chapter 3 tells you how to load your printer with various types of paper, how to install accessories, and how to use the printer's manual controls. You'll be able to use all the standard features, including printing in data processing mode, with character pitch of 10 characters per inch (cpi), and line spacing of 6 lines per inch.

Chapter 4 tells you all about how to use the special functions of the ML92 and ML93 printer through programming.

```
REVISION NO.  = 3.0
 !"#$%&'()*+,-./0123456789:;<=>?@ABCDEFG
!"#$%&'()*+,-./0123456789:;<=>?@ABCDEFGH
"#$%&'()*+,-./0123456789:;<=>?@ABCDEFGHI
#$%&'()*+,-./0123456789:;<=>?@ABCDEFGHIJ
$%&'()*+,-./0123456789:;<=>?@ABCDEFGHIJK
%&'()*+,-./0123456789:;<=>?@ABCDEFGHIJKL
&'()*+,-./0123456789:;<=>?@ABCDEFGHIJKLM
'()*+,-./0123456789:;<=>?@ABCDEFGHIJKLMN
()*+,-./0123456789:;<=>?@ABCDEFGHIJKLMNO
)*+,-./0123456789:;<=>?@ABCDEFGHIJKLMNOP
*+,-./0123456789:;<=>?@ABCDEFGHIJKLMNOPQ
+,-./0123456789:;<=>?@ABCDEFGHIJKLMNOPQR
,-./0123456789:;<=>?@ABCDEFGHIJKLMNOPQRS
-./0123456789:;<=>?@ABCDEFGHIJKLMNOPQRST
./0123456789:;<=>?@ABCDEFGHIJKLMNOPQRSTU
/0123456789:;<=>?@ABCDEFGHIJKLMNOPQRSTUV
0123456789:;<=>?@ABCDEFGHIJKLMNOPQRSTUVW
123456789:;<=>?@ABCDEFGHIJKLMNOPQRSTUVWX
23456789:;<=>?@ABCDEFGHIJKLMNOPQRSTUVWXY
3456789:;<=>?@ABCDEFGHIJKLMNOPQRSTUVWXYZ
456789:;<=>?@ABCDEFGHIJKLMNOPQRSTUVWXYZ[
56789:;<=>?@ABCDEFGHIJKLMNOPQRSTUVWXYZ[\
6789:;<=>?@ABCDEFGHIJKLMNOPQRSTUVWXYZ[\]
789:;<=>?@ABCDEFGHIJKLMNOPQRSTUVWXYZ[\]^
89:;<=>?@ABCDEFGHIJKLMNOPQRSTUVWXYZ[\]^_
9:;<=>?@ABCDEFGHIJKLMNOPQRSTUVWXYZ[\]^_`
:;<=>?@ABCDEFGHIJKLMNOPQRSTUVWXYZ[\]^_`a
;<=>?@ABCDEFGHIJKLMNOPQRSTUVWXYZ[\]^_`ab
<=>?@ABCDEFGHIJKLMNOPQRSTUVWXYZ[\]^_`abc
=>?@ABCDEFGHIJKLMNOPQRSTUVWXYZ[\]^_`abcd
>?@ABC
```

Figure 1-11

CHAPTER 2 — Connecting Your Printer

Overview

Your printer can perform certain functions by itself. It can print a self test, advance paper, set page lengths and top of forms. Since these functions are printer-controlled, the printer performs them OFF LINE (or deselected)—that is, not communicating with a computer.

However, when the printer is ON LINE, or selected, it expects to receive data and instructions from a computer system. The data is sent from the computer to the printer through an interface cable. How that is accomplished varies from Apples™ to Zeniths™. Basically, connecting your printer to your computer is often not as simple as plugging each end of the cable into a socket.

The interface cable you purchase will match the way your computer is set up to send (and receive) data – either parallel or serial. Your dealer may have an interface cable designed to connect your particular computer to your Microline 92 or 93 printer. Or you can have one made.

Of course, if you're experienced with cabling and electronics, you may want to make your own cable by following the instructions provided in Appendix A for parallel interfacing and Appendix C for serial interfacing. But whether you buy a cable or make one yourself, you will have to set internal printer function switches and plugs to comply with your particular application. Serial interfaces have two additional switch banks to set and they are described in Appendix B.

The best way to know how to set the function switches properly is to look in your computer documentation for the answers to the questions which follow. However since we can't guarantee you'll find all the answers there—or even some of them—we've provided the switch settings for most popular computers in Appendix D. If your system isn't listed there, ask your dealer about OKIDATA USERS TIPS which provide interfacing information for many computers.

Matching Your Computer's Requirements

Check Appendix D to see if your computer is listed there. If it is, go to page 27 for instructions on opening the printer and setting the switches. If your computer isn't listed in Appendix D, find your computer manual and answer the following questions—use a pencil and you'll save yourself a step later.

1. Which character set will you be using?
   - A. US ASCII
   - B. British
   - C. German
   - D. French
   - E. Swedish
   - F. Danish
   - G. Norwegian
   - H. Dutch
   - I. Italian
   - J. Radio Shack TRS-80 (Yes it has its own language!)
2. Will you ever be printing on paper that is. . .
   - A. 8½ inches long
   - B. 8 inches long
   - C. Neither
3. Does your computer generate a carriage return (CR) and a line feed (LF) at the end of a line?
   - A. Yes
   - B. No, just a carriage return
4. Do you want the DELETE code (127_D) to print as a ■?
   - A. Yes
   - B. No, ignore the DELETE code
5. What type of interface do you have?
   - A. Serial
   - B. Parallel

See if your answers match the list below. If so, you do not need to change the switch settings and can go to page 33.

1. A — US ASCII
2. A or C — 8½ inches long/neither
3. B — A LF is not generated
4. A — Print the DELETE code as a ■
5. B — Parallel interface

If your answers didn't match ours, you're going to have to reset the switches. Before you begin, you're going to need a

phillips-head screwdriver with at least a 4-inch shaft and the pencil you were using to answer the questions. Figure 2-1 illustrates how you reach the function switches.

1. Turn off your printer and unplug it.
2. Remove the access cover by holding the clear plastic window and lifting up.
3. If installed, remove the roll paper stand, tractor unit and paper.
4. Pull off the platen knob.
5. Loosen the mounting screws which are recessed on right and left front sides of the upper cover. Lift off the cover by pushing it backwards to release it from the hook in the back of the printer.
6. Find the eight function switches which are to the right of the Front Operating Panel.
7. Using a pencil tip or a sharp pointed instrument, slide the switches to the right (OFF) or to the left (ON) to comply with your computer's requirement.
8. If your computer is listed in Appendix D, go there now to set the function switches to conform with your application. If it's not there the questionnaire on the following pages will explain the proper settings (OFF or ON) for your computer.

QUESTION #1 Which character set will you be using?

A character set is a complete set of letters, numbers and special symbols of a language. US ASCII is the most common selection, although TRS-80 owners must use their own character set (See Fig. 2-2). This chart illustrates the special symbols and characters of the other languages. To select a special character set, locate the one you want on the table at the top of page 29 and set switches 1 through 4 as shown. Switches 1 through 4 act in combination to determine the character set that is printed.

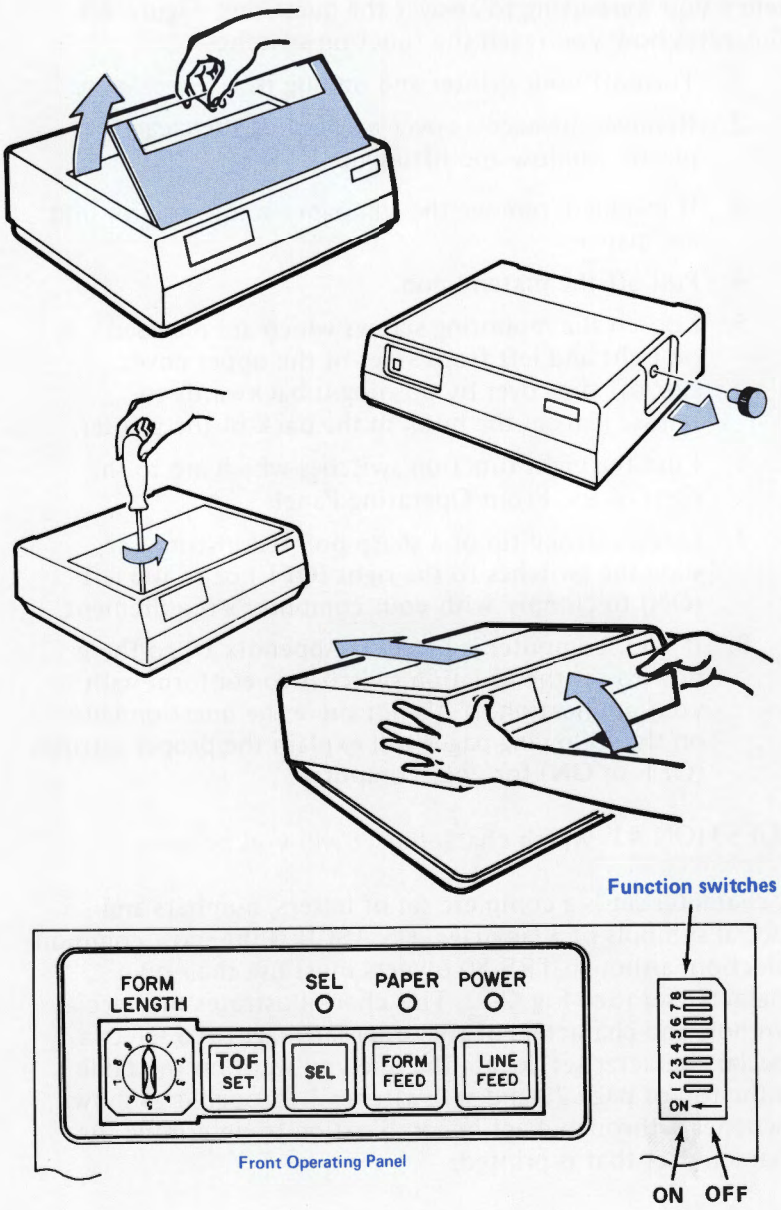
Function switches
FORM LENGTH
SEL
PAPER
POWER
TOF SET
SEL
FORM FEED
LINE FEED
Front Operating Panel
1 2 3 4 5 6 7 8
ON
ON
OFF

Figure 2-1

CHARACTER SET	SW1	2	3	4
US ASCII (already set)	OFF	OFF	OFF	OFF
British	OFF	ON	OFF	OFF
German	ON	ON	OFF	OFF
French	OFF	OFF	ON	OFF
Swedish	ON	OFF	ON	OFF
Danish	OFF	ON	ON	OFF
Norwegian	ON	ON	ON	OFF
Dutch	OFF	OFF	OFF	ON
Italian	ON	OFF	OFF	ON
Radio Shack TRS-80	OFF	ON	OFF	ON

Figure 2-2 illustrates the character set differences.

Language	1	2	3	4	5	6	7	8	9	10	11
US ASCII	#	@	[	\	]	^	`	{	|	}	~
BRITISH	£										
GERMAN		§	Ä	Ö	Ü			ä	ö	ü	ß
FRENCH	£	à	°	ç	§			é	ù	è	ê
SWEDISH		É	Ä	Ö	Å	Ü	é	ä	ö	å	ü
DANISH			Æ	Ø	Å	Ü		æ	ø	å	ü
NORWEGIAN			Æ	Ø	Å		·	æ	ø	å	
DUTCH	£			IJ					ij		
ITALIAN	£	§	°	ç	é		ù	à	ò	è	ì
ASCII standard (TRS-80)			↑	↓	→	←					_

Difference among languages (Same as US ASCII if blank)

Figure 2-2

QUESTION #2 Will you ever be using paper either 8½ inches or 8 inches long?

This question may seem unusual to you. The reason it's there is that OKIDATA printers are marketed worldwide and, as it happens, the standard paper size differs in the United States (8½ inches wide by 11 inches) from Europe (8 inches wide by 11 inches). This becomes a problem only when setting 6 is

used on the Form Length Dial (located on the left of the Front Operating Panel.) If you're going to be printing on paper that is 8½ inches long, Switch 5 must be set to ON. If you are going to be printing on paper that is 8 inches long, Switch 5 must be set to OFF.

QUESTION #3 Does your computer generate a carriage return (CR) and a line feed (LF) at the end of a line?

Some computer systems send the printer a CR and an LF at the end of a line and some just send the CR. The printer requires both to prevent overprinting. If the computer doesn't provide an LF, the printer inserts one when Switch 6 is set to ON. When Switch 6 is OFF, the printer responds to a CR without adding an LF.

QUESTION #4 Do you want the DELETE code (127_D) printed or ignored?

When you are running a program you may require the printing of the DELETE code and will need Switch 7 set to ON. Older computers use the delete code in conjunction with the backspace command to make corrections. Computers of today do not use the delete code and most printers do not backspace including the ML 92 and ML 93. Therefore it is best to ignore the DELETE code by setting Switch 7 to OFF.

QUESTION #5 Is your interface parallel or serial?

While you don't need to know all the electronic ins and outs of an RS232-C or IEEE 488 (pronounced I Triple E) cable, you do have to know the name of the interface your computer uses. If you have a parallel interface, leave Switch 8 in the OFF position. If you have an RS232-C, IEEE 488, or current loop interface, set Switch 8 to the ON side. Incidentally, serial interface boards have additional function switches so make sure you turn to Appendix B after you finish this chapter.

Now that you've set the function switches on the Front Operating Panel, you may have to set two jumper plugs (also known as shorting plugs) located at the rear of the printer. If you have a parallel interface, you will see a circuit board in the last slot at the back of the printer. If you have a serial interface, there will be two circuit boards piggybacked to each other. The small board is the serial interface board, which we're not interested in at the moment. The larger one is the control circuit board and that's the board where the two jumper plugs are housed.

The jumper plugs (SP1 and SP2) are found on the component side of the control circuit board to the bottom right of the middle, and are factory-set to work with most computers. In most instances they should not be changed unless your dealer or technical support has told you to do so. They are difficult to spot at first, since they are very small. Look for three gold posts with white plastic plugs, labeled SP1 A and B, SP2, A and B. Figure 2-3 indicates the location of the jumper plugs. If this is the first time you've opened your printer, the plugs will be set as follows:

SP1 is set to Side B to receive 8 bit data and SP2 is set to Side A to accept DC1 and DC3 codes in order to regulate the print suppress mode. (DC1 notifies the computer that the printer is ready; DC3 deselects the printer, ignoring all data except the DC1 code. See page 105 for details.)

Moving Jumper Plugs

If your dealer or technical support has advised you to change the settings of the jumper plugs, use the following instructions:

For serial interfaces, remove the two mounting screws on the back of the control circuit board. Then disconnect the seven connectors before lifting up the board. Make sure you identify each connector plug in relation to which socket it was removed from so that they are not interchanged when reinstalling the board. (We recommend wrapping a piece of masking tape around the connector plug wire with the corresponding socket I.D. number written on the tape.)

For parallel and serial interfaces, change the jumper plugs, by grasping the white plastic plug and pulling it from the

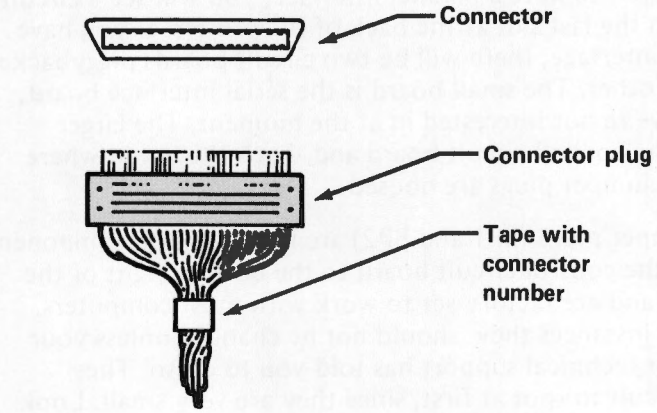
Connector
Connector plug
Tape with connector number

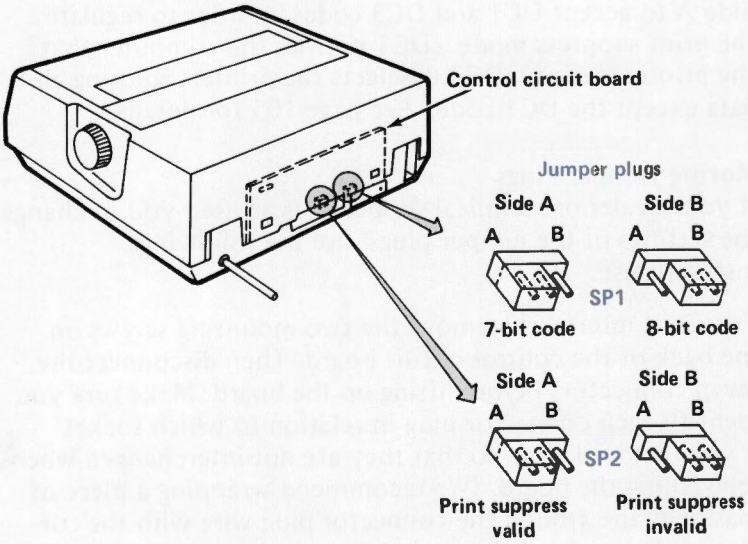
Control circuit board
Jumper plugs
Side A
Side B
A B
A B
SP1
7-bit code
8-bit code
Side A
Side B
A B
A B
SP2
Print suppress valid
Print suppress invalid

Figure 2-3

two posts. Move it to the right (side B) or the left (side A) making sure that the middle post is always covered.

Once you have set the switches on the Front Operating Panel and the jumper plugs on the control circuit board, those of you with serial interfaces should go to Appendix B for details on adjusting the serial board for proper operation with your computer. Those of you with parallel interfaces can close the printer up now by following the instructions below.

NOTE: When you are finished working inside the printer make sure the circuit board's mounting screws are tightened.

Closing Up

1. Replace the upper cover making sure it is properly aligned.
2. Tighten the captive mounting screws on the front sides of the printer.
3. Put the platen knob in the hole on the right side of the printer and push it firmly into place.
4. If you wish, replace the tractor unit or roll paper stand.
5. Insert paper (see page 41) and ribbon. (See page 14.)
6. Replace the access cover.
7. At this point you need an interface cable. If you have not yet purchased one, contact your dealer for assistance. Those of you who are making your own cable should refer to Appendix A for parallel cabling or Appendix C for serial cabling information.

FOR PARALLEL INTERFACE

WARNING: Make sure the printer is unplugged and turned off.

Take the 36-pin plug end of the parallel cable and connect it to the 36-hole amphenol 57-40360 connector at the back of the printer. The cover will snap into place and the triangular-shaped wire ends will bend forward when properly seated to secure the plug in the connector. (When disconnecting the interface, just push in the wire ends to release the plug.) See Figure 2-4.

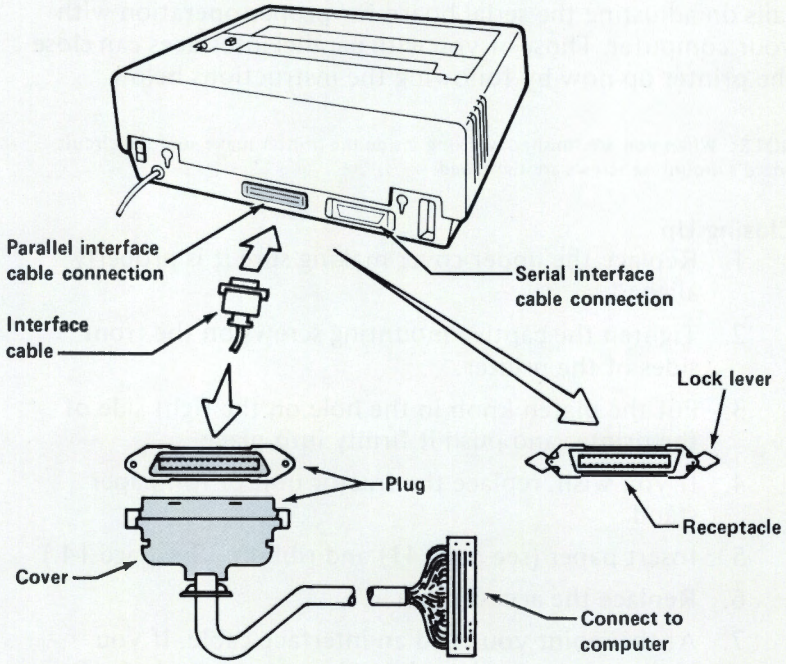
Parallel interface
cable connection
Interface
cable
Serial interface
cable connection
Lock lever
Plug
Receptacle
Cover
Connect to
computer

Figure 2-4

The other end of the cable should go into the computer. Refer to your computer documentation for its cabling and setup requirements.

FOR SERIAL INTERFACES:

WARNING: Make sure the printer is unplugged and turned off.

The plate at the back of the printer should be covering the 36-hole parallel receptacle. (See Figure 2-5.) If it is covering the serial receptacle, remove the screws and plate and cover the parallel connector on the left. Take the 25-pin Cannon DB-25P (or equivalent) plug and snap it over the 25-hole Cannon DB-25S serial interface connector. Tighten the lock screws located on both indented sides of the plug.

Connect the other end of the cable into the computer. Refer to your computer documentation for instructions on installing the cable into the proper connector or printer port.

Now that you have your interface cable connected and switches set, you are ready to go. Plug in your printer and turn it on. Try this quick test—type the programming command in BASIC on the computer; (or use the programming language your computer requires):

10 LPRINT "HELLO"

Then run the program. (If you aren't familiar enough with programming to do this, we'll give you a few pointers in Chapter 4 of this manual.)

You'll notice that the printout will be in data processing mode at 10 characters per inch. If you want to learn how to change the printing style, (to correspondence quality, for example) or how to create your own special characters, read Chapter 4. In either case whether you are satisfied with these set features (data processing printing, 10 CPI and 6 lines per inch) or would like to use other features, proceed to Chapter 3 for some more details on the operation of your printer.

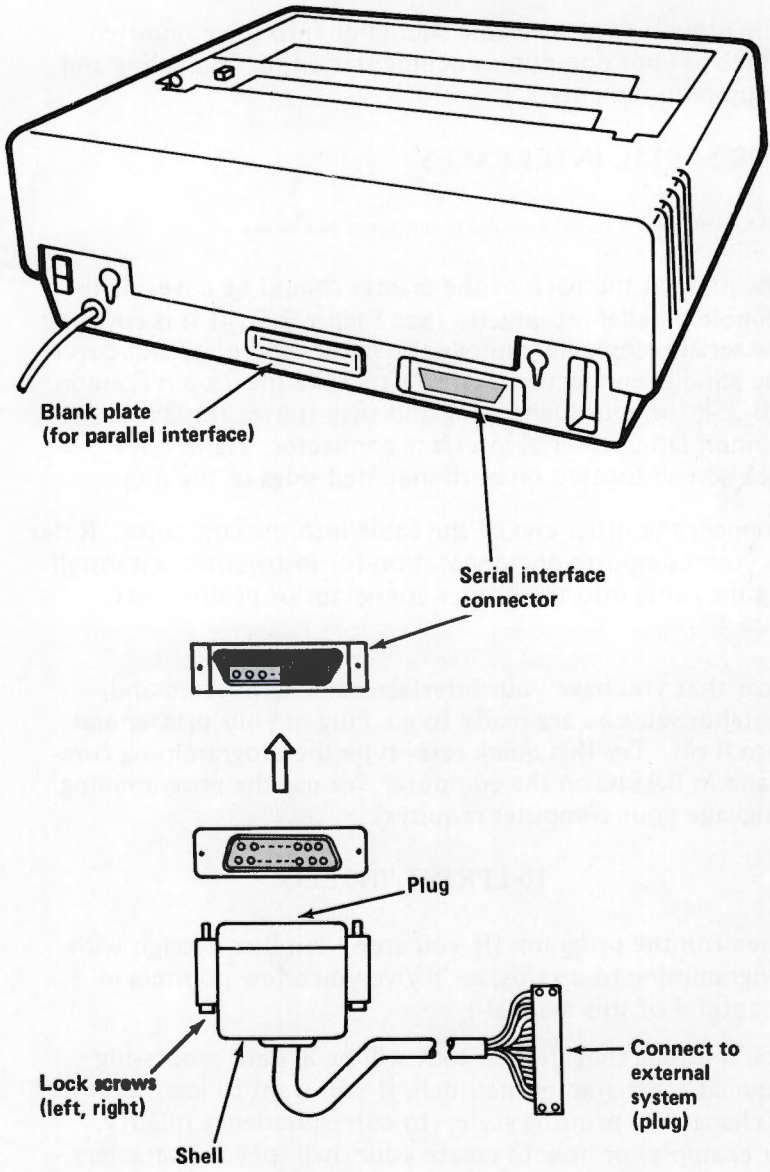
Blank plate
(for parallel interface)
Serial interface
connector
Plug
Lock screws
(left, right)
Shell
Connect to
external
system
(plug)

Figure 2-5

FUNCTION SWITCHES

SWITCH	ON	OFF
1 2 3 4	Character Sets (see page 29)	
5	Page length 8.5" when form length dial is set to 6	Page length is 8" when form length dial is set to 6
6	Printer also performs an LF and a CR when a CR command is given	Printer performs only a carriage return when a CR command is given
7	The delete code is printed as a ■	The delete code is ignored
8	RS232-C, IEEE, or current loop interface effective	Parallel interface effective

CHAPTER 3 Running With Your Computer

Overview

Now that you've printed the self test on your Microline printer (Chapter 1), and connected your printer to your computer (Chapter 2), you're ready to learn the different features that operate your printer. In this section, you'll learn how to load paper, how to adjust the paper, what the lights and buttons on the front operating panel mean, and how to use the operator controls to set the start position for printing, set the form length, and move the paper.

This section is arranged so that you can refer to specific instructions without having to read through the irrelevant material.

First, you'll learn how to load your Microline with paper. Here things become a little tricky because the instructions depend on the type of paper you use.

If you have a Microline 92, you'll find instructions on how to:

- *load individual sheets of paper (page 41)*
- *install a roll paper stand (page 43)*
- *load roll paper (page 43)*
- *install a tractor feed unit (page 46)*
- *load sprocket paper with a tractor unit (page 50)*
- *load sprocket paper without a tractor unit (page 48)*

If you have a Microline 93, you'll find instructions for:

- *loading individual sheets of paper (page 41)*
- *installing the tractor feed unit (page 46)*
- *removing the tractor feed unit (page 46)*
- *loaing sprocket paper (page 50)*

Second, you'll see how to adjust the paper with the paper release lever, platen knob, and the head-gap adjusting lever.

Third, you'll learn what all those lights and buttons on the left front of the printer (the front operating panel) mean. You'll be shown how to use the operator control buttons to set

the position on the paper where you want printing to start (Top of Form), set the form length, and move the paper up by a line or two or a page or two.

After you've read this chapter you'll be able to send text to your Microline printer that will be printed at all the standard settings: data processing mode, character pitch of 10 characters per inch, and text printing of 6 lines per inch. You'll be able to print files from software packages, but if you want to try some of the other more sophisticated features of the Microline 92 and Microline 93, you'll have to read the instructions on programming in Chapter 4.

Loading Paper

Individual Sheets of Paper
Both the Microline 92 and the Microline 93 printers can accommodate individual sheets of paper that are friction-fed. Only one sheet (no copies) may be printed at a time.

Loading individual sheets of paper (refer to Figure 3-1):

1. Turn the printer OFF.
2. Remove the access cover. (Remove the tractor unit if installed).
3. Set the head-gap adjusting lever to position 1.
4. Unlock the paper release lever (position O=open).
5. Pull the column indicator (ML93) or tear-off bar (ML92) away from the platen.
6. Stand the paper guide upright (on ML92 only).
7. Insert paper from the back of the platen, pushing it through until it reaches the front of the platen.
8. Tuck the paper under the column indicator (ML93) or tear-off bar (ML92), make sure the paper's even, and lock the paper release lever (position C=close).
9. Push the column indicator or tear-off bar against the platen.
10. Feed the paper to the first printing line by turning the platen knob.
11. Replace the access cover.

Roll Paper (option for ML92 only)
The Microline 92 accommodates one-part roll paper 8.2" to 8.5" wide, but you must first install the roll paper stand (OKIDATA Part No. 54132001) which is an option available through your dealer.

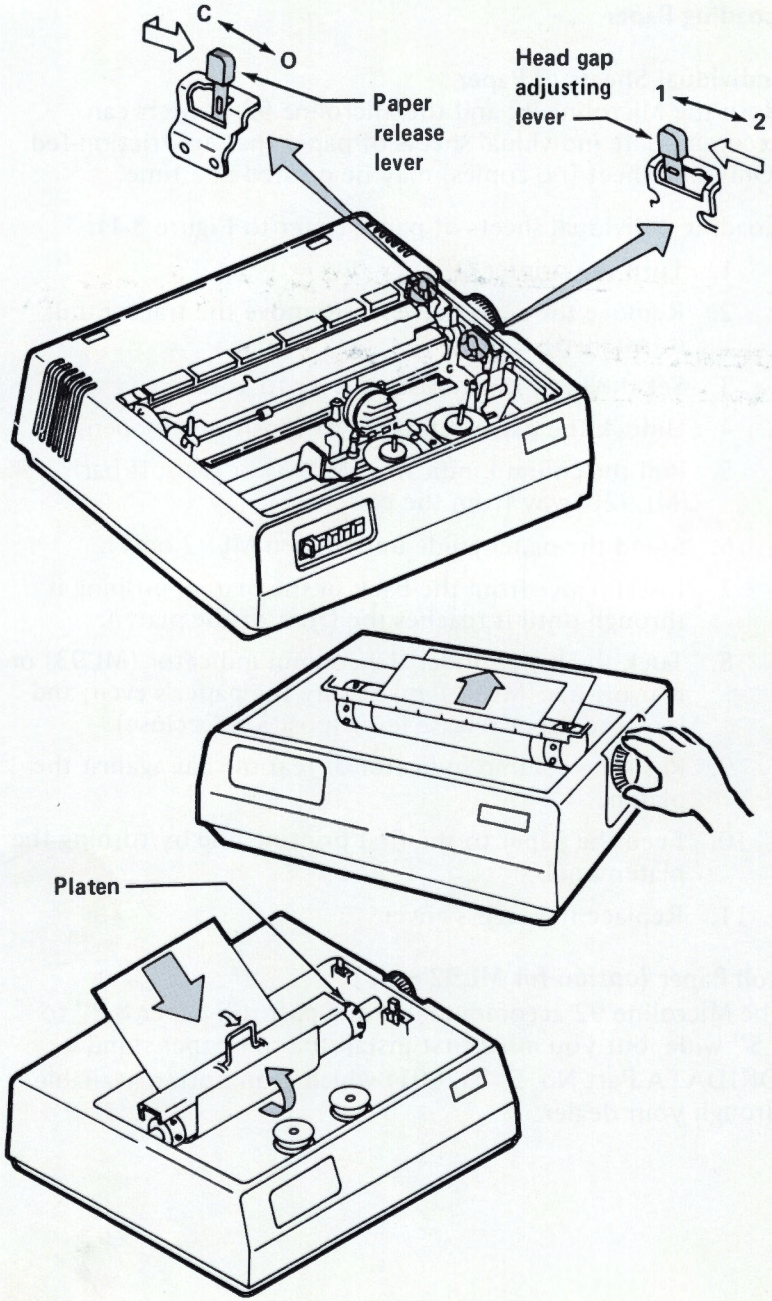

Figure 3-1

Installing the roll paper stand (refer to Figure 3-2):

1. Turn the printer OFF.
2. Insert the hooks of the roll paper stand into the hook catch holes of the printer (one is located on the left rear to the right of the ON/OFF switch, and the other on the right rear to the left of the roll paper stand receptacle).
3. Slide the stand down to connect it to the printer.
4. Insert the plug of the roll paper stand into the receptacle on the far right of the rear of the printer.

Loading roll paper (ML92 only) (refer to Figure 3-3):

1. Turn the printer OFF.
2. Remove the access cover.
3. Insert the paper mounting shaft into the roll paper core.
4. Mount the roll paper on the roll paper stand. The paper should roll from the bottom.
5. Set the head-gap adjusting lever to position 1.
6. Unlock the paper release lever (position O=open).
7. Lift up the tear-off bar and paper guide.
8. Insert the paper from the back of the platen, pushing it through until it reaches the front of the platen.
9. Tuck the paper under the tear-off bar, make sure the paper is even, and lock the paper release lever (position C=close). The left edge of the paper should be about 1/2" inside the left platen sprocket pin position.
10. Push the tear-off bar against the platen.
11. Adjust the left and right guides of the roll paper stand so that they're about .02"-.04" from the edges of the paper.
12. Move the paper to the desired print start position by turning the platen knob.
13. Replace the access cover.

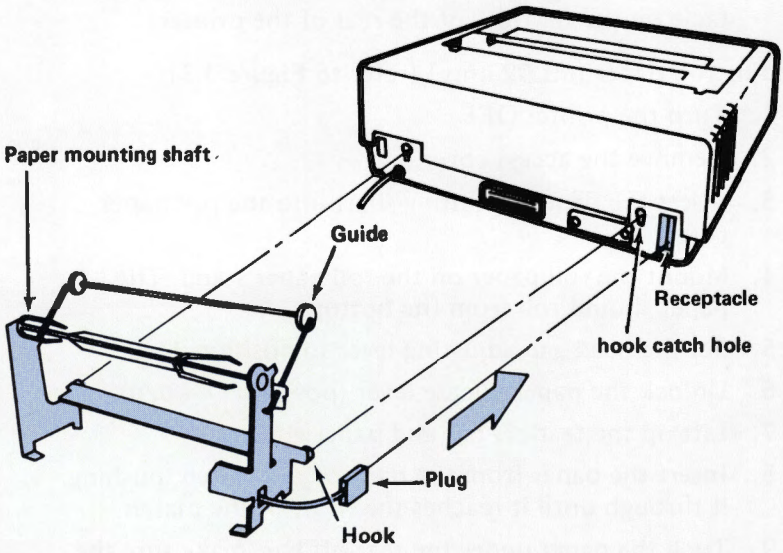
Paper mounting shaft
Guide
Receptacle
hook catch hole
Plug
Hook

Figure 3-2

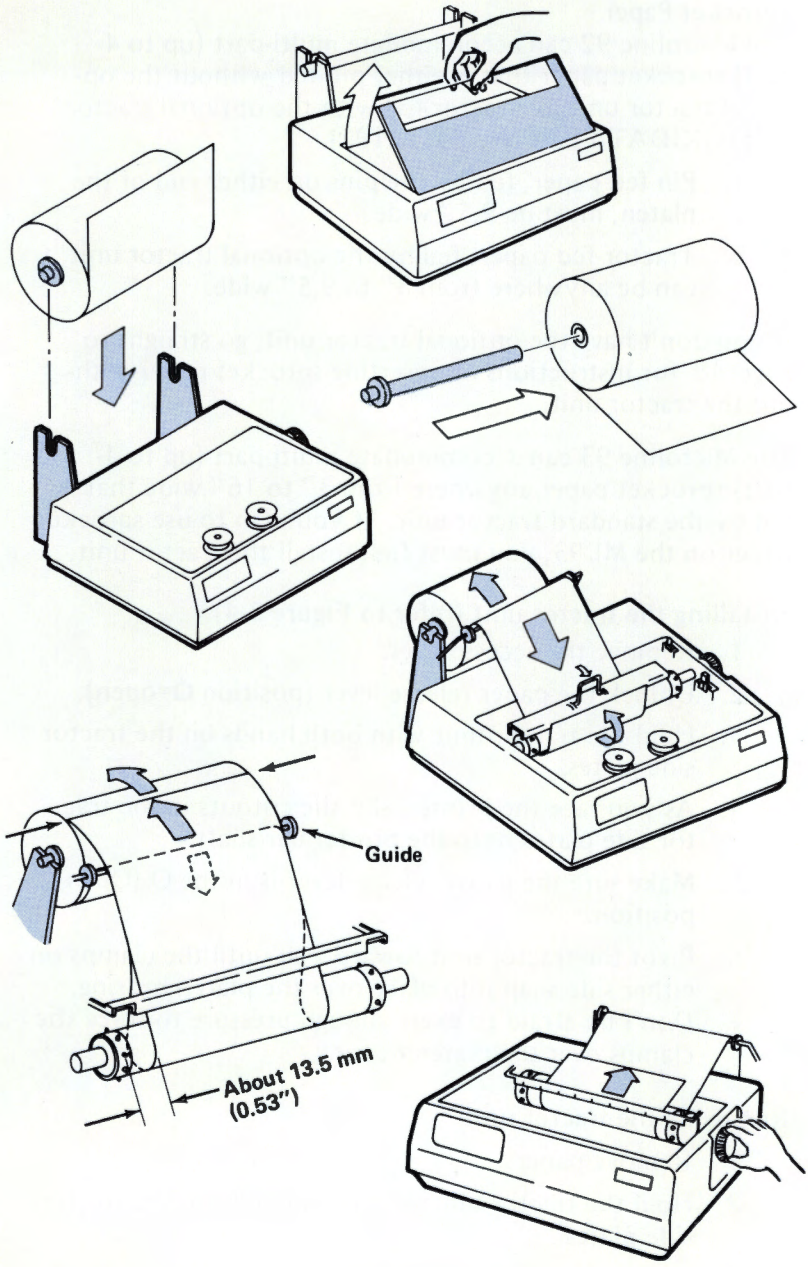

Figure 3-3

Sprocket Paper

The Microline 92 can accommodate multi-part (up to 4-part) sprocket paper that is either pin-fed without the optional tractor unit, or tractor-fed with the optional tractor unit (OKIDATA Part No. 54112101).

a. Pin fed paper, fed by the pins on either end of the platen, must be 9.5" wide.

b. Tractor-fed paper, fed by the optional tractor unit, can be anywhere from 3" to 9.5" wide.

If you don't have the optional tractor unit, go straight to page 48 for instructions on inserting sprocket paper without the tractor unit.

The Microline 93 can accommodate multi-part (up to 4-part) sprocket paper anywhere from 3" to 16" wide that is fed by the standard tractor unit. If you plan to use sprocket paper on the ML93, you must first install the tractor unit.

Installing the tractor unit (refer to Figure 3-4):

1. Remove the access cover.
2. Unlock the paper release lever (position O=open).
3. Hold the tractor unit with both hands on the tractor side plates.
4. As you face the printer, slip the cutouts in the tractor side plates onto the printer bar shaft.
5. Make sure the paper release lever is in the O (Open) position.
6. Pivot the tractor unit toward you until the clamps on either side snap into place over the platen bearing. Don't be afraid to exert enough pressure to force the clamps over the platen bearing.

Removing the tractor unit:

1. Remove paper.
2. Hold the tractor unit with both hands on the tractor side plates.
3. As you face the printer, pivot the tractor unit away from you until the clamps snap off the platen bearing.

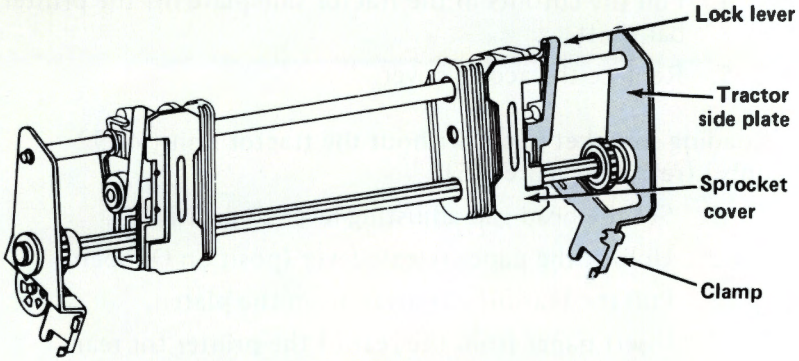

Tractor Unit

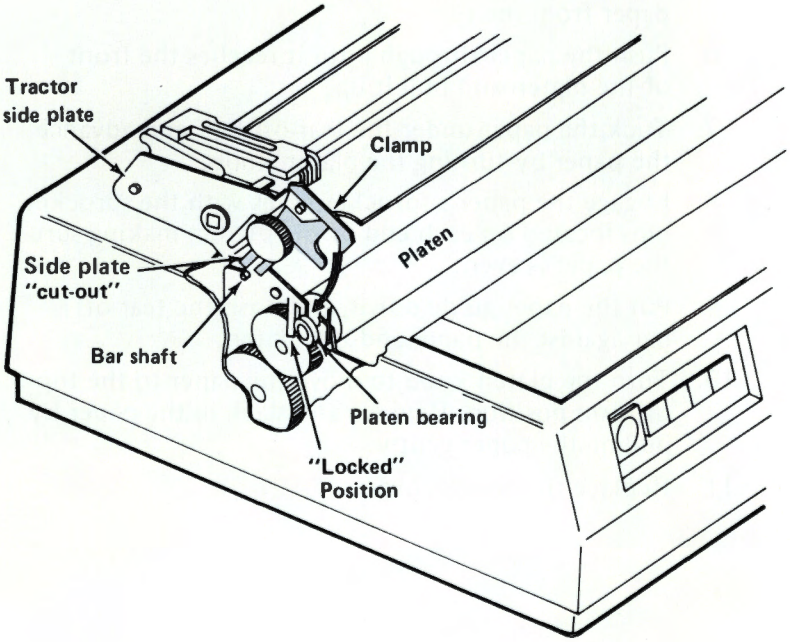

Figure 3-4

4. Pull the cutouts in the tractor side plate off the printer bar shaft.
5. Replace the access cover.

Loading sprocket paper without the tractor unit (ML92 only) **(refer to Figure 3-5):**

1. Set the head-gap adjusting lever to position 1.
2. Unlock the paper release lever (position O=open).
3. Pull the tear-off bar away from the platen.
4. Insert paper from the rear of the printer for rear paper feed, and from the bottom of the printer base for bottom paper feed. NOTE: Printer must be placed on the slotted printer stand for bottom feed.
5. Stand the paper guide upright if you're inserting paper from the rear.
6. Push the paper through until it reaches the front of the platen and pull it up.
7. Tuck the paper under the tear-off bar, and advance the paper by turning the platen knob.
8. Engage the paper's sprocket holes with the sprocket pins located on each end of the platen, making sure the paper is even.
9. Put the paper guide down, and push the tear-off bar against the paper and the platen.
10. Turn the platen knob to move the paper to the top-of-form position. Remove any slack in the paper by pulling the paper gently.
11. Replace the access cover.

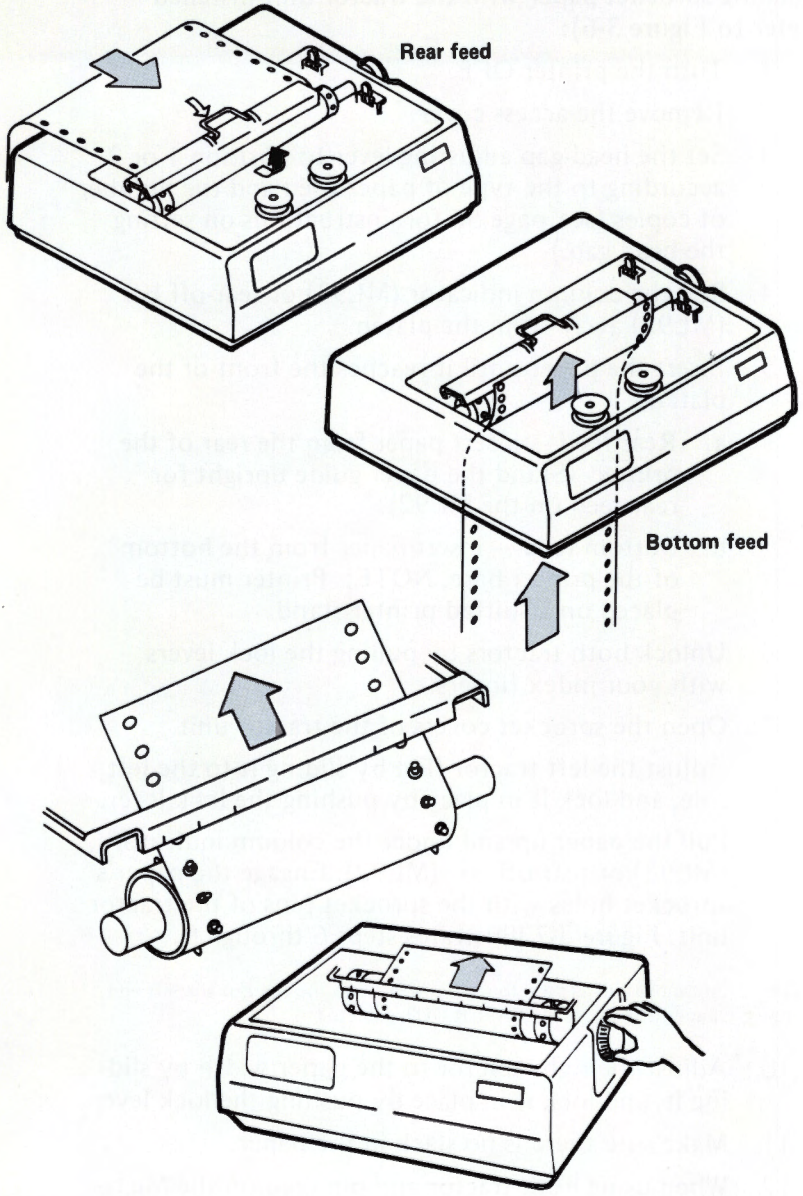

Figure 3-5

Loading sprocket paper with the tractor unit installed (refer to Figure 3-6):

1. Turn the printer OFF.
2. Remove the access cover.
3. Set the head-gap adjusting lever to position 1 or 2 according to the type of paper used and the number of copies (see page 56 for instructions on setting the head gap.)
4. Pull the column indicator (ML93) or tear-off bar (ML92) away from the platen.
5. Insert the paper until it reaches the front of the platen:
   a. Rear feed – insert paper from the rear of the printer. (Stand the paper guide upright for rear feed on the ML92).
   b. Bottom feed – insert paper from the bottom of the printer base. NOTE: Printer must be placed on a slotted printer stand.
6. Unlock both tractors by pulling the lock levers with your index fingers.
7. Open the sprocket covers of the tractor unit.
8. Adjust the left tractor first by sliding it to the left side, and lock it in place by pushing the lock lever.
9. Pull the paper up and under the column indicator (ML93) or tear-off bar (ML92). Engage the paper's sprocket holes with the sprocket pins of the tractor unit. Figure 3-7 illustrates steps 6 through 9.

NOTE: Don't move the left tractor more than 2" to the right of the left end, so that the paper is fed past the PAPER-OUT detector.

10. Adjust the right tractor to the paper width by sliding it, and lock it in place by pushing the lock lever.
11. Make sure there is no slack in the paper.
12. When using both tractor and pin feed on the Microline 92, remove paper slackness by pushing the spring-loaded tractor gear to the left with your finger to disengage it from the idle gear, and turn the tractor

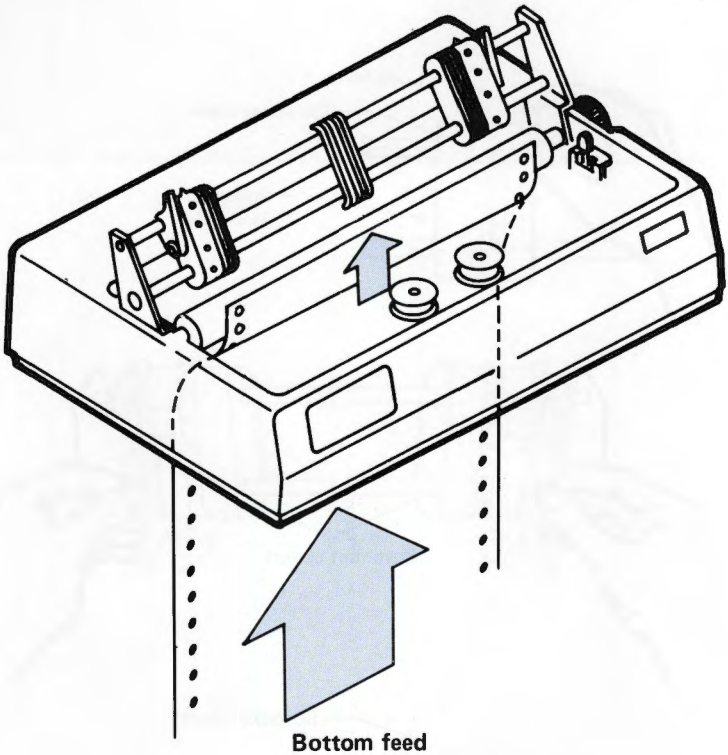

Bottom feed

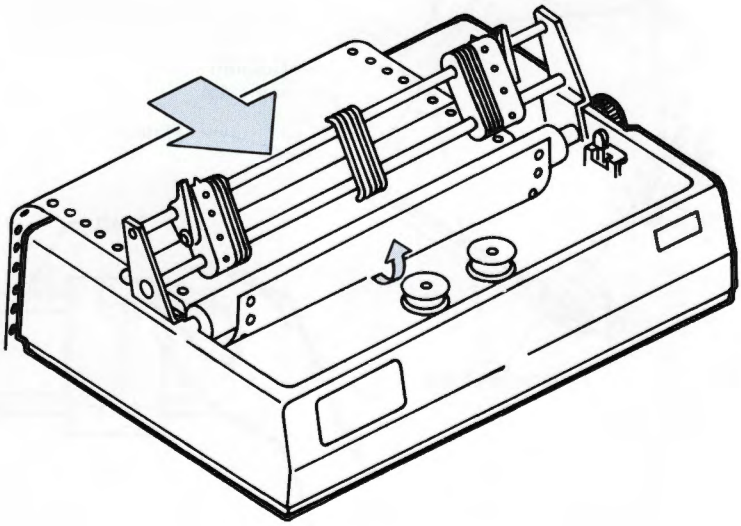

Rear feed

Figure 3-6

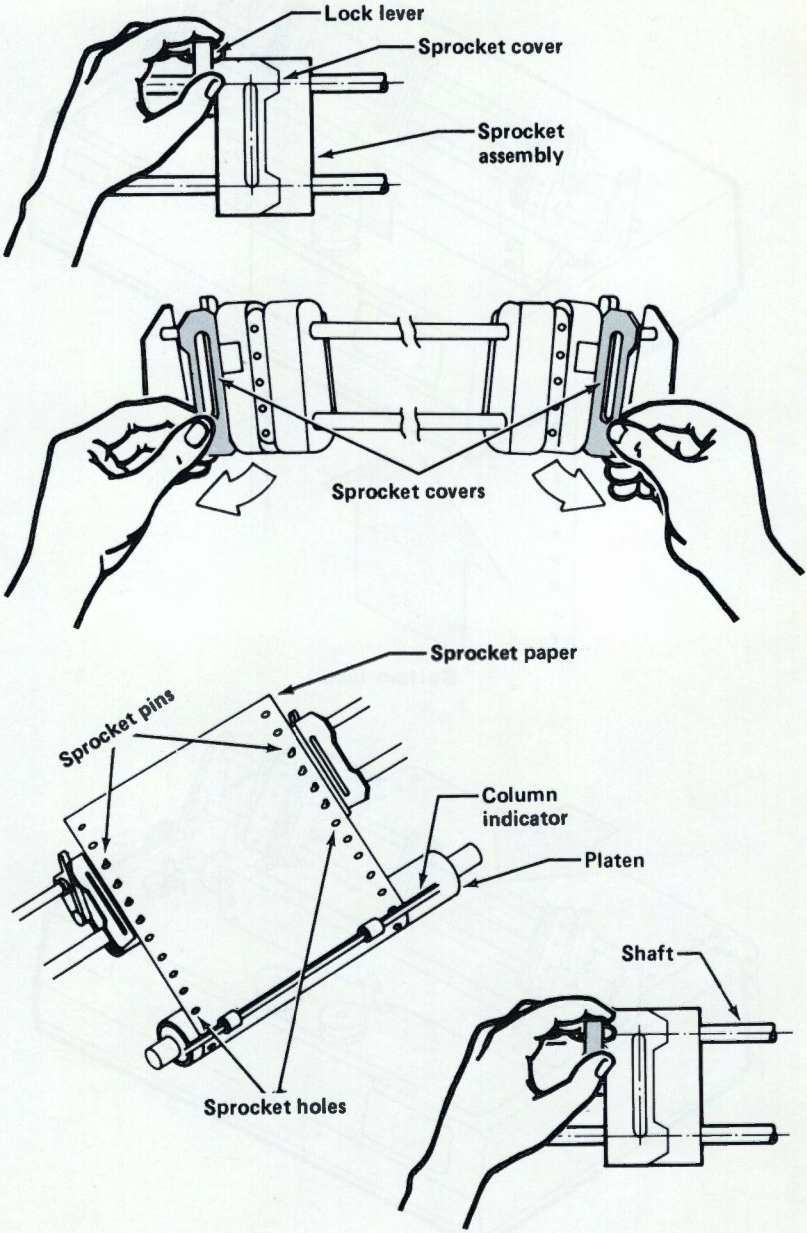
Lock lever
Sprocket cover
Sprocket assembly
Sprocket covers
Sprocket paper
Sprocket pins
Column indicator
Platen
Shaft
Sprocket holes

Figure 3-7

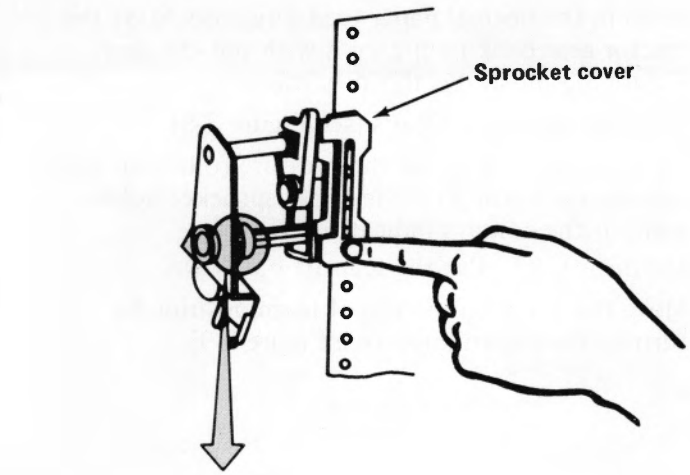

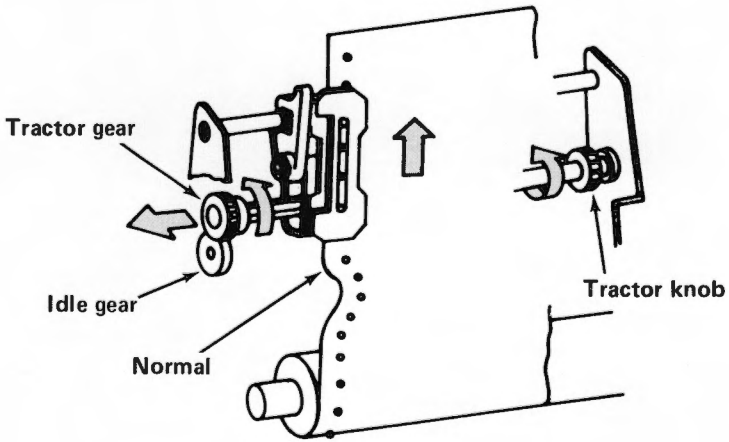

Figure 3-8

knob in the normal paper feed direction. Slide the tractor gear back to engage it with the idle gear. Figure 3-8 illustrates this procedure.

13. Close the sprocket covers (see Figure 3-9).
14. On the ML93: Line up the pressure rollers on the column indicator with the paper sprocket holes, and put the column indicator down.

    On the ML 92: Put the tear-off bar down.
15. Move the paper to the top-of-form position by turning the platen knob (see Figure 3-9).

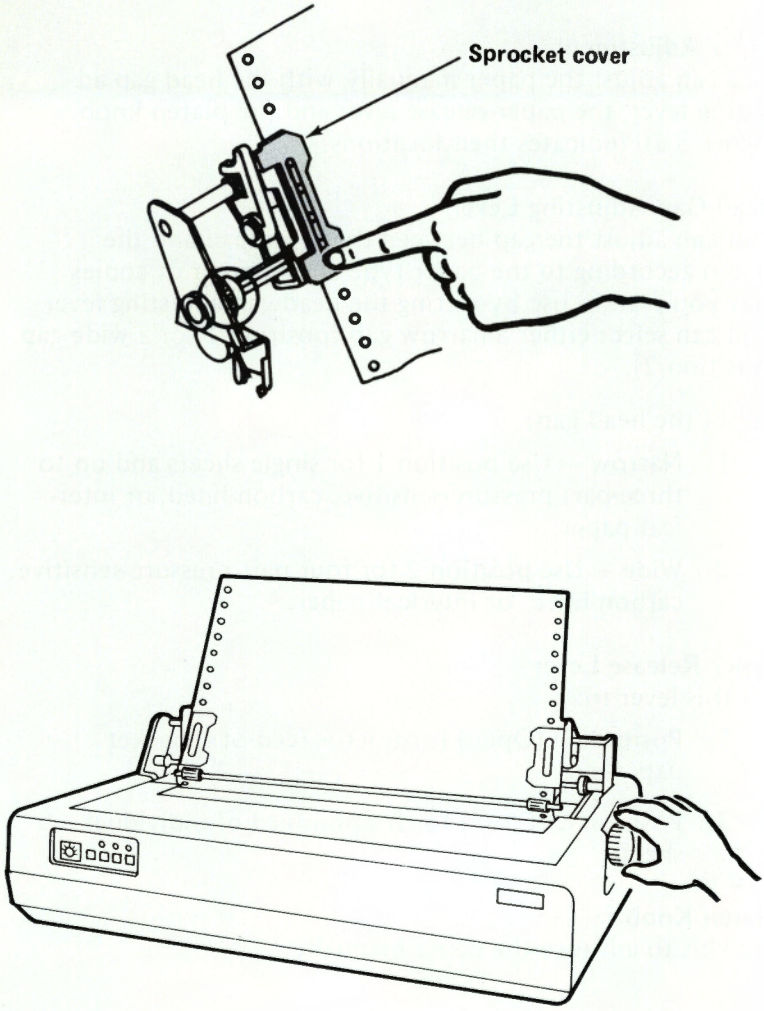

Figure 3-9

Paper Adjustment

You can adjust the paper manually with the head-gap adjusting lever, the paper release lever and the platen knob. Figure 3-10 indicates their locations.

Head Gap Adjusting Lever

You can adjust the gap between the printhead and the platen according to the paper type and number of copies that you plan to use by setting the head-gap adjusting lever. You can select either a narrow gap (position 1) or a wide gap (position 2).

To set the head gap:

1. Narrow – Use position 1 for single sheets and up to three-part pressure-sensitive, carbon-lined, or interleaf paper.
2. Wide – Use position 2 for four-part pressure-sensitive, carbon-lined, or interleaf paper.

Paper Release Lever

Set this lever to:

1. Position O (Open) for tractor feed of sprocket paper, or
2. Position C (Close) for friction feed of individual sheets.

Platen Knob

Use this to advance the paper manually.

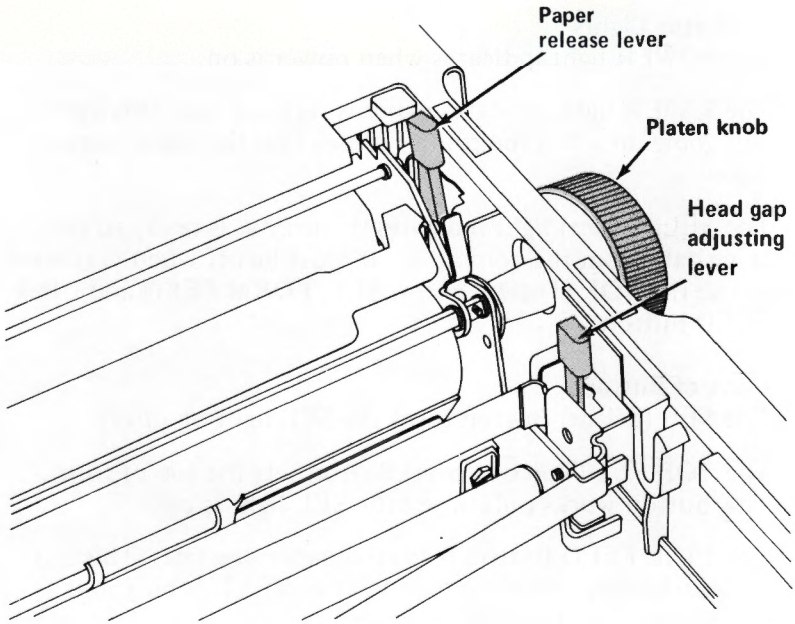

Figure 3-10

Indicator Lights and Control Buttons

You've probably found the printer's ON/OFF switch by now. It's located on the left rear of the printer (viewed from the rear).

The printer's manual controls and indicators are located on the left front of the printer on the front operating panel (see Figure 3-11).

Indicator Lights

The POWER light indicates when power is on.

The PAPER light indicates paper is running out. This light will come on when the printer senses that the paper supply is low.

The SEL (Select) light indicates the printer is ready to receive data from the computer. It must be off when you want to use the TOF (Top of Form) SET, FORM FEED and LINE FEED buttons.

Control Buttons

The SEL (Select) Button turns the SEL light on or off.

The TOF SET (Top of Form) Button sets the top of form. This button works only when the SEL light is off.

The LINE FEED Button feeds the paper one line. This button works only when the SEL light is off. This button is also used to run the local print test.

The FORM FEED Button feeds the paper up one form length. This button works only when the SEL light is off.

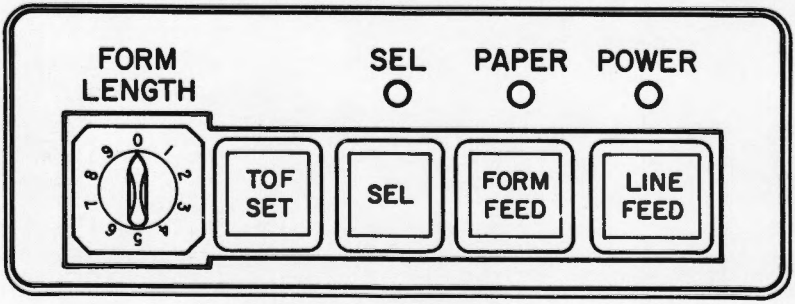

Front Operating Panel

Figure 3-11

Using the Control Buttons to Adjust and Move Paper

You can use the controls on the front operating panel to set:

TOF SET	the position where you want printing to start
FORM LENGTH SELECTION DIAL	the length of the paper used (3" to 14")

and also to move the paper:

LINE FEED	up one or more lines
FORM FEED	to the next top of form position

Read the following for more details on how these controls are used.

TOF (Top of Form) SET Button

With the TOF SET button you can set the position where printing will start on a page. It functions only when the SEL light is off.

When the printer is ON:

1. Turn the SEL light off by pushing the SEL button.
2. Move the paper to the position you want.
3. Push the TOF SET button.
4. Push the SEL button to select the printer again.
5. Top of Form is set.

The Top of Form position is automatically set when the printer is turned on.

FORM FEED Button

Use this button to move the paper to the next top-of-form position. It functions only when the SEL light is off.

1. Turn the SEL light off by pushing the SEL button.
2. Push the FORM FEED button.
3. The paper will move to the next top of form position.
4. Push the SEL button again to select the printer.

LINE FEED Button

Use this button to advance the paper one or more lines. This button functions only when the SEL light is off.

1. Turn the SEL light off by pushing the SEL button.
2. Push the LINE FEED button.
3. The paper will move up one line.

You can also use the LINE FEED button to run the local print test as we demonstrated earlier:

1. Turn the printer OFF.
2. Push the LINE FEED button and hold it down.
3. Turn the printer ON.
4. Release the LINE FEED button after about two seconds.
5. The local print test will print the 96 ASCII characters in a continuous test pattern.
6. Push the SEL button to stop the local print test.

FORM LENGTH SELECTION DIAL

With this dial you can specify the form length of the paper you are using. You have a choice of ten positions for paper lengths of 3" to 14". Position 6 has two possible values: paper length of 8.5" with function switch 5 (SW5) ON, and paper length of 8" with SW5 OFF (see Question 2 on page 29). Use the table below as a guide to select form length.

Paper Length Selection

Rotary Dial Position	Paper Length	Lines Per Page	
		@ 6 lpi	@ 8 lpi
0	3 inches	18	24
1	3.5 inches	21	28
2	4 inches	24	32
3	5.5 inches	33	44
4	6 inches	36	48
5	7 inches	42	56
6	8 or 8.5 inches*	48 or 51	64 or 68
7	11 inches	66	88
8	12 inches	72	96
9	14 inches	84	112

*To select a page length of 8 inches, 48 lines per page @ 6 lpi, or 64 lines per page @ 8 lpi, function switch 5 (SW5) must be set in the OFF position.

To set form length:

When the printer is OFF:

1. Set the FORM LENGTH dial to position desired.
2. Adjust paper to where you want printing to start.
3. Turn the printer ON. Page length and top of form are set automatically.

When the printer is ON:

1. Turn SEL light OFF by pressing the SEL button.
2. Set the FORM LENGTH dial to the desired position.
3. Adjust the paper to where you want printing to start.
4. Press the TOF SET button to set paper length and top of form.
5. Select printer by pressing the SEL button.

Now you're ready to print at all the standard settings of the Microline 92 and Microline 93 printers. This means that you

can make your printer print in data processing mode, with a character pitch of 10 characters per inch (cpi), and with line spacing of 6 lines per inch.

If you want to take advantage of all the special features of these printers, like correspondence quality mode, different character sizes, different printing styles (emphasized, enhanced, superscript or subscript), etc., you have to either find software packages, such as word processing software, that allow for these features, or learn some basic programming so you can instruct your printer to perform its tricks.

Don't be alarmed! You don't have to become a programmer; but you've probably realized that computers don't understand human languages. Computers are marvelous tools, but they won't work unless you know how to communicate your wishes to them. If you've had your computer system for a while or just purchased it, you're learning how to operate it by translating your instructions into its particular programming language. Like your computer, the Microline 92 and Microline 93 printers only understand instructions or commands that are written in a certain way. To learn how to communicate with your printer, read Chapter 4.

Overview

If you've read this far, you've already set up your printer and gotten it running with your computer. You can load paper and change ribbon, and you know what the indicator lights tell you and how to use the controls on the printer.

At this point you can print out information from a software package using the printer's "default" settings – the kind of printing set automatically when you turn the printer on. So if you're not interested in using the other features you don't need to read any further. To review, these are the default settings:

Data Processing Printing – high-speed bidirectional printing at 160 CPS (characters per second)

Character size 10 CPI (characters per inch)

Line spacing 6 LPI (lines per inch) – the distance between the bottom of one line and the bottom of the next is 1/6"

This character size and line spacing is the same as a standard "pica" typewriter set for single spacing.

But the MICROLINE 92/93 can do a lot more than pretend to be a typewriter: it gives you an assortment of different sizes and kinds of printing, automatic formatting capabilities, and graphics – you can even design your own characters. This chapter describes these "bells and whistles" and explains how to use them.

The printing features are regulated by special codes – called "control codes" – which the computer sends to the printer. If you're writing your own program, you send control codes to the printer the same way you transmit characters to be printed – by including them in a BASIC "LPRINT" statement, for example. Software packages use a variety of methods to handle control codes. The section called "If You're using a Software Package" beginning on page 65 outlines a few of those methods, but you'll have to look in the instruction book that comes with your particular package to find out how they work.

CHAPTER 4

For each feature we've included examples to illustrate how each one works. These examples are in the form of short programs written in the BASIC programming language, so you'll need to know a little about programming to follow them in detail. If you're a programmer, try them out and use them as a basis for experiment (we'd love to hear from you if you come up with something interesting). If you're just starting out in programming, the section called "The BASICs" will give you a short lesson on how to use the control codes in your program. Keep in mind that different versions of BASIC vary slightly in format – we're using Microsoft BASIC – so check your manual for changes you may have to make in printing commands.

If You're Using a Software Package

Different brands of printers have different printing features, and even if they have similar features, the control codes that turn them on and off probably won't be the same – there aren't any industry standards. (However, all Microline printers use the same control codes for their similar features.) Software packages also have different ways of letting you control printing features. This section briefly explains some of the more common methods but you should look in your software instructions for specific details. Also check for any printing limitations in your software – for example, you may be able to select a printing feature for an entire document but not change printing within the document (for features like underlining or superscripts), or you may not be able to use page formatting features like horizontal tabs or the Vertical Format Unit. Your dealer can help you out with OKIDATA USERS TIPS for some popular software packages.

When you first use your package, you'll probably have to run a program that sets it up for your particular computer. The program will ask you to select individual parts of your system from a series of lists or "menus." If "OKIDATA 92/93" is listed on the printer menu, pick that – the software will be automatically adapted to send the proper codes for the features the software uses. If your printer isn't listed, pick the closest general description – "Teletype-like printer" is often used.

With some software, like WordStar, you can easily modify or "install" your program to accept your printer's control codes by putting the codes in certain locations within the program. Just follow the instructions in the WordStar manual and OKIDATA USERS TIPS. In other word processing packages, like SuperWriter, you can place MICROLINE control codes in the text itself by preceding them with "/OUT." Other packages, like VisiCalc, have a "setup" option as part of the printing procedure; this allows you to specify a different print size or print quality for the entire document. Notice that in this chapter and in the Control Code Quick Reference chart (Appendix G), all codes are given in two different forms: one labeled "decimal" and one labeled "hexadecimal"; be sure you use the form your software requires.

You can use an alternative method if your computer is equipped with BASIC. Simply put, you can run a one- or two-line program to tell the printer to change a feature, then, *without turning the printer off,* load and run your software package. For example, suppose you want to use Correspondence Quality printing. First load BASIC, then type the following command and press ENTER or CR:

```
LPRINT CHR$(27);CHR$(49)
```

(You don't really need to know how to program to do this, but do be sure to check your BASIC manual to find out what printing command to use – not all versions of BASIC are the same.)

The line you just typed instructs the computer to send the control code for Correspondence Quality printing to the printer. Then when you load and run your software, any printing you do will be Correspondence Quality until you turn off the printer (or until the printer receives a command to cancel that feature). This method works because most of the printer's special features will stay in effect until you either send a code to change the features or turn the printer off. You can also use this technique to program the Vertical Format Unit (see page 90) or to load custom-designed characters using the Downline Loadable Character Generator (see page 106).

You won't be able to use this method with all computer systems. With some computers, when you load a program, a signal (called "I-PRIME") is sent to the printer which cancels any special printing features. Check your computer's manual to see if this applies to your system.

SPECIAL NOTE FOR OWNERS OF IBM PERSONAL COMPUTERS OR IBM-PC COMPATIBLE COMPUTERS: OKIDATA's IBM PLUG 'N PLAY Kit is a special option that makes your MICROLINE 92 or 93 fully compatible with software written for the IBM Graphics printer. See your dealer for more information. Also ask for a copy of our "User's Guide for Operating Microline Printers with the IBM Personal Computer."

The BASICs

In this section we're going to give you a quick lesson on how to make your printer do what you want it to do, and try a few simple examples. It helps to know a bit about how a computer "talks" to a printer, so we'll go a little into that without getting too technical. (If you're an experienced programmer, you can skip this section and go straight to the control codes on page 75.) We'll use the BASIC programming language, but the principles are similar for other languages. You'll be using a few of your MICROLINE's special features in the examples, but we won't go into detail here.

An LPRINT statement – or something like it – tells the computer to send information to the printer. If you haven't done it already, take a minute to check your BASIC manual to find out what form this statement takes in your version of BASIC. If you have an Apple, for example, you would use PRINT, and you have to add this line before you use it:

```
PR#1
```

This makes the PRINT statement send information to the printer instead of the display screen. Other systems, like the Commodore PET, require an OPEN statement, then PRINT #1. LPRINT is the most common, so we'll use it in our example; be sure to make the necessary changes for your computer before you try the examples out. And don't forget punctuation: some versions require a comma or semicolon after LPRINT, and others don't.

Make sure your printer is ready to go (ribbon, paper, power on, SEL light on), and we'll experiment a little. Type the following one-line program, making whatever modifications your computer requires:

```
10 LPRINT "HELLO"
```

Now RUN the program. Your printer should spring into action and this should appear on the paper:

```
HELLO
```

Let's stop for a minute and look at what's really going on. Computer equipment can't understand letters – only

numbers (specifically binary numbers – just "1's" and "0's"; if you want to know more about that any good introductory book on computers will explain it). When it carries out an LPRINT command, the computer sends the printer a code number for each character (letter, number, punctuation mark, symbol, etc.) in the quotation marks; as the printer receives each number, it prints the pattern of dots associated with that code.

The standard code system used is called ASCII – American Standard Code for Information Interchange. In Appendix F you'll find a complete list of the decimal ASCII code numbers along with their equivalents in the binary and hexadecimal number systems (you don't need to worry about the latter unless you're doing fancy programming). Of course, there are a few computers – like the Timex/Sinclair, the Commodore 64 and the VIC-20 – that use different code systems. In those cases you need special interfaces or software to make the conversions – we have USERS TIPS to help you out.

You can use these ASCII numbers directly in your LPRINT statement by using the CHR$ function. This sends the ASCII code in parentheses to the printer. For example, after spending a few minutes with the ASCII chart, we can rewrite our first sample program this way:

```
20 LPRINT CHR$(72);CHR$(69);CHR$(76);
          CHR$(76);CHR$(79)
```

RUN this program and you get:

```
HELLO
```

The same result!

Obviously this is a tedious way to write, but we'll need it later to control the printer's special features.

Be sure you're straight about the difference between ASCII code numbers and numbers as printable characters. For example, the printable character "1" is represented by the ASCII code number 49, and you can print it using this statement:

```
LPRINT CHR$(49)
```

Controlling the Printer Using Non-Printable Codes

So far we've been talking about printable characters, ASCII codes 32 (space) through 127 (delete symbol – ▮ – which may or may not be printable, depending on how you've set switch 7 inside the printer). The non-printable codes, numbered 0 through 31, don't tell the printer to print something, but they do tell it to change the way it prints or tell it to do something else, like move the paper up one line. You'll notice on the ASCII chart that they have abbreviations; some make sense and others don't, unless you're a telecommunications expert, but they are handy for reference.

Let's try a few. We're just interested in how to put them into a program, so we won't go into details about the features we're using – the next sections will tell you all you need to know.

First we'll add a line to our sample program:

```
10 LPRINT "HELLO"
20 LPRINT CHR$(31);"HELLO"
```

Now RUN the program. The result should look like this:

```
HELLO
HELLO
```

(If the second line prints over the first, try setting switch 6 inside the printer to ON – see page 30.)

Incidentally, notice that the printhead moves left to right to print the first line and right to left to print the second line. This is "bidirectional" printing, which speeds up the printing by eliminating unnecessary motion.

ASCII code 31 (US) tells the printer to print each character at double the normal width. We have to use CHR$ to send this kind of non-printable code to the printer; nothing in quotes will work. (The abbreviations are for us humans, not for the machines.) Like most of the commands that change the kind of printing, the double width command stays in effect until you send another code to change it (or until you

turn the printer off). Try running our sample program a second time and look what happens:

First run:

HELLO
HELLO

Second run:

HELLO
HELLO

The second time, both lines are printed at double width. That's because the US command from the first time you've run the program is still in effect the second time it's run. If you want to go back to standard size printing – 10 characters per inch – you have to put in CHR$(30):

```
10 LPRINT "HELLO"
20 LPRINT CHR$(31); "HELLO"
30 LPRINT CHR$(30); "HELLO"
```

Here's the result:

HELLO
HELLO
HELLO

To avoid any unpleasant surprises, you may want to put a CAN code – CHR$(24) – at the end of each program. This resets the printer to the normal startup condition (except for a few page formatting features). Before you try the next example, be sure you have fanfold or roll paper in your printer – single-sheet paper won't work. Also check that you've set the Form Length and Top of Form according to the instructions starting on page 59. (if you're using normal 11" paper, the FORM LENGTH dial should be set at 7). Now add a line to the last example, so that it reads like this:

```
10 LPRINT "HELLO"
15 LPRINT CHR$(12);
20 LPRINT CHR$(31); "HELLO"
30 LPRINT CHR$(30); "HELLO"
```

When you RUN the program, this is what should happen: the printer prints HELLO, then advances the paper to the top of the next page, then prints HELLO at double width, advances one line, and prints HELLO in normal size print. CHR$(12) in line 15 is the "FF" or Form Feed code; it's one of the few non-printable codes that has a sensible abbreviation, and it's standard for virtually all printers; on the other hand, "US" doesn't have a standard function. (Note: TRS-80 computers don't use the FF code.) Starting from wherever the printhead happens to be on the page, FF moves the paper up to the top of the next page.

ESCape Sequences

Many of the MICROLINE's special printing features are controlled by combinations of ASCII codes. The first code in these combinations is "ESC" – CHR$(27); this tells the printer that the next code number it receives should be interpreted as part of an instruction, and not printed as a character. The next code – or codes – tells the printer what to do next. The whole series of codes is called an "ESCape sequence."

As an example, let's use one of the MICROLINE 92/93's most impressive features: Correspondence Quality printing. The ESCape sequence you need is ESC 1, so this is what you add to the program: CHR$(27);CHR$(49). Check the ASCII chart in Appendix F and you'll see that the ASCII code for "1" is 49. If you want to return to normal, high-speed ("Data Processing") printing, add ESC 0 in this form: CHR$(27);CHR$(48). Our new example looks like this:

```
10 LPRINT "HELLO"
16 LPRINT CHR$(27);CHR$(49); "HELLO"
20 LPRINT CHR$(31);"HELLO"
30 LPRINT CHR$(27);CHR$ (48);CHR$(30) ;"HELLO"
```

Line 15 was deleted to save paper.

Line 16 puts in the ESCape sequence for Correspondence Quality and prints another HELLO. The printer then prints in Correspondence Quality until it hits the ESC 0 code in line 30, and the last HELLO will come out in normal Data Processing print.

When you RUN this sample, watch how the printer works. For Correspondence Quality printing, the printhead makes two passes for each line; the second pass fills in the dot pattern to give a denser, crisper character.

Here's the result:

HELLO
HELLO
HELLO
HELLO

Remember that a printable character in quotes is sent to the printer as an ASCII code. This means you can simplify typing ESCape sequences. Instead of

```
CHR$(27) ;CHR$(49)
```

you can type

```
CHR$(27) ;"1"
```

Just keep in mind that this works only for printable characters (letters or numbers). For non-printable codes (like ESC), you must use CHR$ and the ASCII code number.

Some ESCape sequences include numerical information. ESC VT, for example, lets you skip up to 99 lines. You have to specify the number of lines as a two-digit number, so after CHR$(27);CHR$(11) — ESC VT — you must add either two ASCII codes (one for each digit), or the two-digit number in quotes. Here's a sample using both methods. Each one makes the printer skip three lines:

```
10 LPRINT "FIRST LINE"
20 LPRINT CHR$(27); CHR$(11);CHR$(48); CHR$(51);
30 LPRINT "SKIP THREE LINES"
40 LPRINT CHR$(27);CHR$(11); "03";
50 LPRINT "SKIP THREE MORE LINES"
```

Check the ASCII chart:

```
27 = ESC
11 = VT
48 = 0
51 = 3
```

Lines 20 and 40 both make the printer skip three more lines. Don't forget the semicolons at the end of these lines; otherwise the printer will skip an extra line.

Here's the result:

```
FIRST LINE


SKIP THREE LINES


SKIP THREE MORE LINES
```

A few ESCape sequences use a different method. For example, ESC % 9 lets you specify line spacing in multiples of 1/144" up to a maximum of 127/144". In this case, after CHR$(27);CHR$(37);CHR$(57); — or CHR$(27);"%9"; — you have to put the desired multiple in CHR$ in its normal form, not as an ASCII code.

Here's a sample to try:

```
10 LPRINT CHR$(27);"%9";CHR$(72)
20 FOR I = 1 TO 3
30 LPRINT "HELLO"
40 NEXT I
50 LPRINT CHR$(24)
60 FOR J = 1 TO 3
70 LPRINT "HELLO"
80 NEXT J
```

Line 10 sets the line spacing for 72/144" = 1/2".

Lines 20-40 are a simple FOR –NEXT loop to print HELLO three times.

Line 50 — the "CANcel" code — cancels line 10 to return to normal line spacing (1/6"), but after an automatic 1/2" line feed at the end of the loop.

Lines 60-80 print HELLO three times at the normal spacing. Before you use a feature requiring numerical input, check the

information in the next section to make sure you're entering it properly.

This is what the printout should look like:

```
HELLO

HELLO

HELLO


HELLO
HELLO
HELLO
```

This isn't quite all there is to programming, but it should be enough to get you started. As you become more experienced with programming, you'll find your own shortcuts and tricks. It's easy once you get the hang of it.

A Word about Notation

In this section, control codes are given in three forms:

EXAMPLE

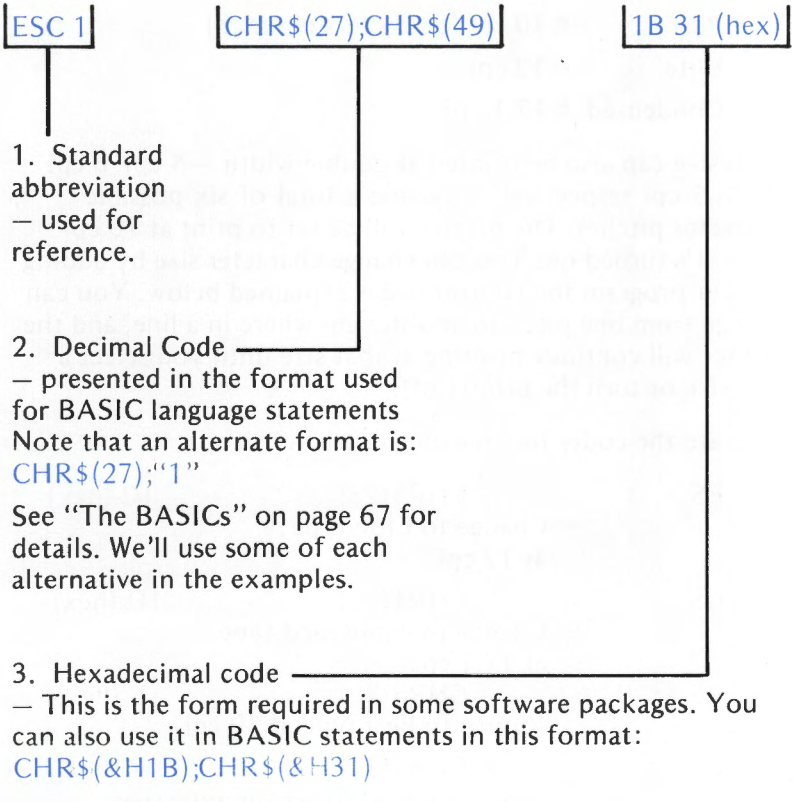

NOTE: Hexadecimal numbers must have two digits; in other words, the hexadecimal equivalent of decimal 1 is 01.

CHARACTER SIZES

The Microline 92 and 93 can print characters in three sizes, known as "pitches".

Pica	= 10 cpi (characters per inch)
Elite	= 12 cpi
Condensed	= 17.1 cpi

Each size can also be printed at double width – 5 cpi, 6 cpi and 8.5 cpi respectively – giving a total of six possible character pitches. The printer will be set to print at 10 cpi when it's turned on. You can change character size by adding to your program the control codes explained below. You can change from one pitch to another anywhere in a line, and the printer will continue printing at that size until you select a new size or turn the printer off.

Here are the codes for changing character size:

FS CHR$(28) 1C (hex)
– Change to Elite type at 12 cpi

GS CHR$(29) 1D (hex)
– Change to condensed type at 17.1 cpi

RS CHR$(30) 1E (hex)
– Return to Pica type at 10 cpi

US CHR$(31) 1F (hex)
– Doubles the width of the type size currently in effect

You can cancel the double-width code by entering any of the above control codes for single-width characters.

NOTE: You cannot use Condensed (17.1 CPI) or doubled Condensed (8.5 CPI) print when Correspondence Quality mode is in effect. If you try to change to these print sizes while Correspondence Quality is active, the printer will ignore the print size codes.

Obviously, the number of characters you can print on one line depends on the character size as well as the width of the paper. The following table shows the maximum number of

characters per line for each character pitch and printer model.

Table 1 — Maximum Number of Characters per Line

	Character Size					
	Pica 10 cpi CHR$(30)	Elite 12 cpi CHR$(28)	Condensed 17.1 cpi CHR$(29)	Doubled Pica 5 cpi CHR$(31)	Doubled Elite 6 cpi CHR$(31)	Doubled Condensed 8.5 cpi CHR$(31)
ML92	80	96	136	40	48	68
ML93	136	163	233	68	81	116

Some versions of BASIC (IBM BASIC, for example) will not normally let you print more than 80 characters on a line. Check your BASIC manual to find out how to override this limitation — a WIDTH statement is the most common method used.

Example:

```
20 LPRINT "PICA pica 10 CPI"
30 LPRINT CHR$(28);" ELITE elite 12 CPI"
40 LPRINT CHR$(29);" CONDENSED condensed 17.1
   CPI"
50 LPRINT CHR$(30);" PICA again"
60 LPRINT CHR$(31); " DOUBLE Pica"
70 LPRINT (CHR$ (28);CHR$(31); "DOUBLE Elite"
80 LPRINT CHR$(29);CHR$(31); "DOUBLE
   Condensed"
90 LPRINT CHR$(30); "Pica ";CHR$(28);"Elite ";
   CHR$(29); "Condensed ";CHR$(30);"Pica again"
```

Here's the printout:

```
PICA pica 10 CPI
ELITE elite 12 CPI
CONDENSED condensed 17.1 CPI
PICA again
DOUBLE pica
DOUBLE Elite
DOUBLE Condensed
Pica Elite Condensed Pica again
```

CORRESPONDENCE QUALITY AND DATA PROCESSING PRINTING

When you turn on your printer, it's automatically set for data processing printing. This is a high-speed (160 characters per second) mode which prints bidirectionally — first line prints left to right, second line prints right to left, etc. This is handy for program listings and high-volume printing.

For important documents and letters, use OKIDATA's special correspondence quality printing. This mode prints at 40 characters per second in two passes; the second pass fills in the dot pattern to form a sharp, crisp letter. It's ideal for word processing packages.

ESC 1	CHR$(27);CHR$(49) —Start Correspondence Quality printing	1B 31 (hex)
ESC 0	CHR$(27);CHR$(48) —Stop Correspondence Quality printing and return to Data Processing printing	1B 30 (hex)

NOTE: You can't use Correspondence Quality printing if you've selected Condensed print (17.1 CPI) or doubled Condensed print (8.5 CPI). If you try to select Correspondence Quality while these character sizes are in effect, the printer will not change to Correspondence Quality printing.

EXAMPLE

```
10 LPRINT CHR$(27);CHR$(49);"Correspondence Quality printing"
15 FOR I = 1 TO 2
20 LPRINT "PICA pica 10 CPI"
30 LPRINT CHR$(28);"ELITE elite 12 CPI"
40 LPRINT CHR$(29);"CONDENSED condensed 17.1 CPI"
50 LPRINT CHR$(30);"PICA again"
60 LPRINT CHR$(31);"DOUBLE Pica"
70 LPRINT CHR$(28);CHR$(31);"DOUBLE Elite"
80 LPRINT CHR$(29);CHR$(31);"DOUBLE condensed"
90 LPRINT CHR$(30);"Pica ";CHR$(28);"Elite ";
   CHR$(29);"Condensed ";CHR$(30);"Pica again"
100 LPRINT CHR$(27);CHR$(48);"Data Processing"
110 NEXT I
```

For this example, we've taken the sample program on page 77 and turned it into a loop.

Line 10 activates Correspondence Quality printing for the first run through the Loop.

Lines 15 and 110 define the boundary of the loop.

Line 100 turns on Data Processing printing for the second run through the loop.

When you try this program, watch how the printhead moves. Notice that on the first run through the loop (Correspondence Quality), it makes two passes over each line, and on the second run (Data Processing), it makes one pass in alternate directions. See also the difference in speed between the two printing modes.

Remember that in Correspondence Quality, codes to change to 17.1 CPI and 8.5 CPI are ignored. That's why on the first run, line 40 and "condensed" in line 90, prints at 12 CPI and line 80 prints at 6 CPI.

The printout looks like this:

```
Correspondence Quality Printing
PICA pica 10 CPI
ELITE elite 12 CPI
CONDENSED condensed 17.1 CPI
PICA again
DOUBLE pica
DOUBLE Elite
DOUBLE Condensed
Pica Elite Condensed Pica again
Data Processing
PICA pica 10 CPI
ELITE elite 12 CPI
CONDENSED condensed 17.1 CPI
PICA again
DOUBLE pica
DOUBLE Elite
DOUBLE Condensed
Pica Elite Condensed Pica again
Data Processing
```

CHARACTER SPACING (CORRESPONDENCE QUALITY ONLY)

This feature – for Correspondence Quality printing only – is designed for use with software that can control the spacing between individual letters to produce proportional spacing. Proportional spacing creates a more polished "typeset" look by varying the spaces between letters in proportion to the width of the letters. Compare a printed page with a typed page and you'll see the difference.

If your software package can do this, you will need to modify, or "patch," the software using the codes explained below. Your software instructions should tell you how to do this.

The normal spacing between characters – set automatically when the printer is turned on – is 3/120" for 10 CPI printing or 3/144" for 12 CPI. The command described below lets you increase that spacing up to a maximum of 14/120" or 14/144."

ESC N 0-11 CHR$(27);CHR$(78);CHR$(0-11) 1B 4E 00-0B (hex)

—increases the spacing between characters in multiples of 1/120" (10 CPI) or 1/144" (12 CPI) up to a maximum distance of 14/120" or 14/144" between characters.

NOTE: The normal distance between characters is 3/120" or 3/144". The number you put into this command determines the multiple of 1/120" or 1/144" that will be added to the normal spacing. The largest number you can put into the command is 11, so the maximum possible space between characters is

3/120" (standard spacing at 10 CPI) + 11/120" = 14/120" or
3/144" (standard spacing at 12 CPI) + 11/144" = 14/144"

ESC N 0 CHR$(27);CHR$(78);CHR$(0) 1B 4E 00 (hex)

—Returns printer to the standard spacing

NOTE: This feature can be used in Correspondence Quality mode only. The spacing set by the ESC N command takes effect immediately, and stays in effect until it is changed by another ESC N command or until the printer is turned off.

Example

```
10 LPRINT CHR$(27);CHR$(49);
20 LPRINT "NORMAL SPACING – 3/120 IN."
30 LPRINT CHR$(27);CHR$(78);CHR$(11);
40 LPRINT "SPACING 14/120 IN."
50 LPRINT CHR$(27);CHR$(78);CHR$(0);
60 LPRINT "NORMAL SPACING AGAIN"
70 LPRINT CHR$(27);CHR$(48)
```

Program Notes:

Line 10 activates Correspondence Quality printing
Line 30 changes the spacing to 3/120" + 11/120" = 14/120" between characters
Line 50 returns to normal spacing (3/120" + 0/120")
Line 70 cancels Correspondence Quality printing and returns to Data Processing printing

The printout looks like this:

```
NORMAL SPACING --3/120 IN.
S P A C I N G   1 4 / 1 2 0   I N .
NORMAL SPACING AGAIN
```

LINE SPACING

When you turn on the printer, it's automatically set to print at a line spacing of 6 lines per inch — that is, the distance between the bottom of one line and the bottom of the next line is 1/6". (This is the normal line spacing of a typewriter.)

To fit more printing on a page, you can change the line spacing to 8 lines per inch, or for special effects you can change line spacing in multiples of 1/144". This doesn't affect the height of the characters — only the space between lines.

Keep in mind that changing line spacing affects the Top of Form position, since it changes the number of lines per page.

Use these control codes to change line spacing:

ESC 8	CHR$(27);CHR$(56) — changes line spacing to 8 lines per inch (1/8" per line)	1B 38 (hex)
ESC 6	CHR$(27);CHR$(54) — changes line spacing back to 6 lines per inch (1/6" per line)	1B 36 (hex)
ESC %9 0-127	CHR$(27);CHR$(37); CHR$(57);CHR$ (0 through 127) — changes line spacing to the designated multiple of 1/144" per line	1B 25 39 00-7F (hex)

NOTE: The maximum line spacing is 127/144" per line. When set to 0/144", this control code produces an overstrike with no line feed.

Line Spacing example:

```
10 LPRINT CHR$(27);"1"
20 FOR I=1 TO 6
30 LPRINT "6 lines per inch"
40 NEXT I
50 LPRINT CHR$(27);"8"
60 FOR J=1 TO 8
```

```
 70 LPRINT "8 lines per inch"
 80 NEXT J
 90 FOR K=0 TO 15
100 LPRINT CHR$(27); "%9";CHR$(K);
110 LPRINT "variable line spacing"
120 NEXT K
130 LPRINT CHR$(27);"6"
140 LPRINT "Return to 6 lines per inch"
150 LPRINT "6 lines per inch"
```

Line 10 activates Correspondence Quality printing.

Lines 20-40 print 6 lines at 6 lines per inch.

Line 50 activates 8 lines per inch spacing.

Lines 60-80 print 8 lines at 8 lines per inch.

Lines 90-120 are a loop that prints one line at a spacing of K/144" for each value of K from 0 to 15.

Line 130 returns to 6 lines per inch

Here's the printout:

```
6 lines per inch
6 lines per inch
6 lines per inch
6 lines per inch
6 lines per inch
6 lines per inch

8 lines per inch
8 lines per inch
8 lines per inch
8 lines per inch
8 lines per inch
8 lines per inch
8 lines per inch
8 lines per inch
variable line spacing
variable line spacing
variable line spacing
variable line spacing
variable line spacing
variable line spacing
variable line spacing
variable line spacing

Return to 6 lines per inch
6 lines per inch
```

EMPHASIZED AND ENHANCED PRINTING

Emphasized printing is produced by a half-dot horizontal offset. In Enhanced printing, a second pass is offset by one-half dot vertically.

You can't use these features with Correspondence Quality printing.

Use these control codes for emphasized and enhanced printing:

ESC T	CHR$(27);CHR$(84) —starts emphasized printing (horizontal offset)	1B 54 (hex)
ESC H	CHR$(27);CHR$(72) —starts enhanced printing (vertical offset)	1B 48 (hex)
ESC I	CHR$(27);CHR$(73) —stops emphasized or enhanced printing	1B 49 (hex)

Sample program for emphasized and enhanced printing:

```
10 LPRINT "The word ";CHR$(27);CHR$(84);
   "Emphasized ";CHR$(27);CHR$(73);"is in empha-
   sized print."
20 LPRINT CHR$(27);CHR$(84);"This whole line is
   emphasized.";CHR$(27);CHR$(73)
30 LPRINT "The word ";CHR$(27);CHR$(72);"En-
   hanced ";CHR$(27);CHR$(73);"is in enhanced
   print."
40 LPRINT CHR$(27);CHR$(84);CHR$(27);
   CHR$(72);"Emphasized and Enhanced together, ";
   CHR$(27);CHR$(73); "normal"
```

The printout looks like this:

```
The word Emphasized is in emphasized print.
This whole line is emphasized.
The word Enhanced is in enhanced print.
Emphasized & Enhanced together, normal.
```

UNDERLINING

You can use this feature to draw an unbroken line under characters. This line will also extend under spaces.

ESC C	CHR$(27);CHR$(67) — starts continuous underlining	1B 43 (hex)
ESC D	CHR$(27);CHR$(68) — stops underlined printing	1B 44 (hex)

Sample program for underlining:

```
LPRINT "Start  ";CHR$(27);CHR$(67);"underlined
    printing";CHR$(27);CHR$(68);" stop"
```

Notice that the underlining overlaps the tip of the tail on "p" and "g":

```
Start underlined printing stop
```

SUPERSCRIPTS AND SUBSCRIPTS

With this feature, you can print characters slightly above the print line (superscripts) for footnotes and exponents, and characters slightly below the print line (subscripts) for formulas.

For added compatibility with word processing systems, these two features cancel each other; that is, a subscript code stops superscript printing, and a superscript code cancels subscript printing. You can also use the separate cancelling codes given below.

ESC J	CHR$(27);CHR$(74) — starts superscript printing or stops subscript printing	1B 4A (hex)
ESC L	CHR$(27);CHR$(76) — starts subscript printing or stops superscript printing	1B 4C (hex)
ESC K	CHR$(27);CHR$(75) — stops superscript printing	1B 4B (hex)
ESC M	CHR$(27);CHR$(77) — stops subscript printing	1B 4D (hex)

NOTE: Superscript and subscript printing continue until you stop them, even beyond the end of a line. Be sure to cancel these features before the end of a line or else line spacing will be thrown off.

Example

```
10 LPRINT "OKIGRAPH";CHR$(27);CHR$(74);"tm";
          CHR$(27);CHR$(76);" H";CHR$(27);
          CHR$(76);"2";CHR$(27);CHR$(74);"0"
```

The printout looks like this:

OKIGRAPH^{tm} H_2O

FORM LENGTH, TOP OF FORM AND FORM FEED

Setting form length lets the printer know how long the paper is; Top of Form records the position of the first line of printing on the page — that is, it sets the top margin. After printing several lines, performing a Form Feed will then automatically move the paper up to the first printing line of the next page.

Form Length and Top of Form can be — and usually are — set with the controls on the front of the printer (see pages 59-61). They can also be set using the control codes below in your program.

Control codes for setting:

Form Length

ESC F 00-99	CHR$(27);CHR$(70);"00-99"	1B 46 30-39 30-39 (hex)
	— sets form length at the two-digit number of lines up to a maximum of 99 lines	

NOTE: This ESCape sequence overrides the setting on the FORM LENGTH dial.

ESC F 00	CHR$(27) ;CHR$(70) ;"00"	1B 46 30 30 (hex)
	— cancels form length set by program	

Top of Form

ESC 5	CHR$(27);CHR$(53)	1B 35 (hex)
	— sets top of form	

Form Feed

FF	CHR$(12)	0C (hex)
	— advances paper to top of next form	

NOTE: TRS-80 computers will not recognize this code.

Suppose you want to print on a three-inch form with one-inch margins at the top and the bottom.

Before running the program, set the print line one inch from the top of the paper.

Here's what the program would look like:

```
10 LPRINT CHR$(27);"F";"18";
20 LPRINT CHR$(27);"5";
30 FOR I=1 TO 2
40 FOR J=1 TO 6
50 LPRINT J
60 NEXT J
70 LPRINT CHR$(12)
80 NEXT I
```

Line 10 sets the form length at 18 lines (3 inches at 6 lines per inch).

Line 20 sets top of form.

Lines 40-60 is a loop that prints the numbers 1 through 6 on successive lines.

Line 70 advances the paper to the top of the next page.

The loop bounded by lines 30 and 80 causes the sequence to be printed twice.

Here's the printout:

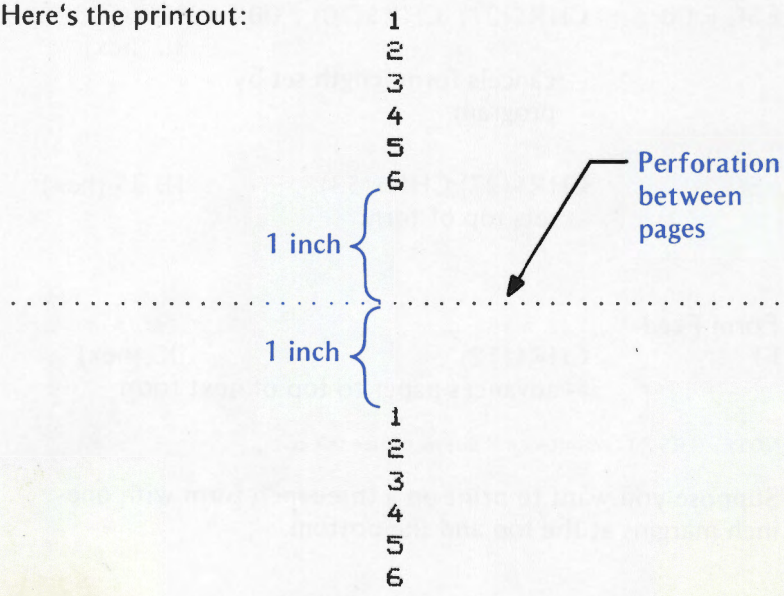

DIRECT LINE SKIP

This feature lets you skip up to 99 lines on the page.

ESC VT 1-99 CHR$(27);CHR$(11);"01-99" 1B 0B (30 31-39 39) (hex)

— directly skips up to a maximum of 99 lines

Sample program for direct line skip:

```
10 LPRINT "FIRST LINE";
20 LPRINT CHR$(27);CHR$(11);"05";"SKIPPED
     FIVE LINES"
```

The printout looks like this:

```
1 FIRST LINE
2
3
4
5
6 SKIPPED FIVE LINES
```

VERTICAL FORMATTING

The electronic Vertical Format Unit (VFU) lets you pre-program up to twelve different sets of vertical tab stops called channels. You can use it in combination with the horizontal tab feature to print information on preprinted forms or to print your own forms. Lines at the beginning of the program indicate the positions of the stop and a channel code. In the program, whenever the printer receives a VT (vertical tab) code – CHR$(11) – followed by the channel code, it skips to the next tab stop in that channel.

NOTE: The maximum number of tab stops you can load for all 12 channels combined is 54.

Use the following codes to load vertical tabs and to tab:

DC4	CHR$(20) – starts loading sequence	14 (hex)
?	CHR$(63) – ends loading sequence	3F (hex)
VT	CHR$(11);CHR$(49-60) – tab to next stop in channel indicated	0B 31-3C (hex)

Use the following codes to designate the channel:

Table 2 – VFU Channel Codes

Channel No.	ASCII (decimal) code	Character
1	CHR$(49)	"1"
2	CHR$(50)	"2"
3	CHR$(51)	"3"
4	CHR$(52)	"4"
5	CHR$(53)	"5"
6	CHR$(54)	"6"
7	CHR$(55)	"7"
8	CHR$(56)	"8"
9	CHR$(57)	"9"
10	CHR$(58)	":"
11	CHR$(59)	";"
12	CHR$(60)	"<"

Start the loading sequence with CHR$(20). Follow it with a number of spaces — or CHR$(32), the decimal ASCII code for a space — equal to the number of the line where you want your first stop. Next add spaces equal to the number of lines to be skipped to the next stop and insert the channel code. Continue this way until you've programmed all the stops you want, then add enough spaces so that the total number of spaces in the sequence equals the number of lines on your page, and end the sequence with CHR$(63) — the decimal ASCII code for a "?"

Think of the loading sequence as a picture of the page, with a space — or a space code — representing each line. A channel code is placed directly after the space representing the line where you want to set a tab stop. Use one statement to load several channels of stops with the same form length.

It's easier to follow an example. Suppose you want to set up a 12 line (2") form with tabs at the 3rd, 5th, and 9th lines. Use channel 1. If your version of BASIC has the STRING$ function, you can use the ASCII code for a space — 32 in decimal form — easily, like this:

```
10  LPRINT CHR$(20);STRING$(3,32);CHR$(49);
    STRING$(2,32);CHR$(49);STRING$(4,32);
    CHR$(49);CHR$(32);CHR$(63)
```

If your BASIC doesn't have STRING$, you'd have to replace STRING$(4,32) with CHR$(32);CHR$(32);CHR$(32);CHR$(32). There is an easier way: add the proper number of spaces in quotes. The same statement would look like this:

```
LPRINT CHR$(20);"  1 1  1 1?"
```

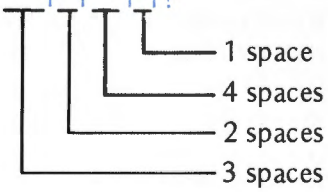

Whichever method you use, be sure the number of spaces — or space codes — equals the number of lines in your form. Also, don't forget any spaces after the last tab stop — otherwise a Form Feed command won't work right.

To tab to the next stop, use:

```
LPRINT CHR$(11);CHR$(49)
```

or

```
LPRINT CHR$(11);"1"
```

Example of Vertical Formatting

Let's try something fancy: two channels, each with a different form length. To do this you need to reset form length using ESC F – review pages 87-88.

Here's the program:

```
 20  LPRINT CHR$(20);STRING$(3,32);CHR$(60);
     STRING$(4,32);CHR$(60);STRING$(6,32);
     CHR$(60);STRING$(5,32);CHR$(63) ;
 30  LPRINT CHR$(27);"F";"18" ;
 40  LPRINT CHR$(27);"5" ;
 50  LPRINT CHR$(29);CHR$(31);"STATEMENT";
     CHR$(30)
 60  LPRINT CHR$(11);"<"; "NAME:"
 70  LPRINT "ADDRESS:"
 80  LPRINT CHR$(11);"<";"ITEM                PRICE"
 90  LPRINT CHR$(11);"<";"                TOTAL DUE:"
100  LPRINT CHR$(12);
110  LPRINT CHR$(27);"F";"12";
120  LPRINT CHR$(27);"5";
125  LPRINT CHR$(20);STRING$(3,32);CHR$(49):
     STRING$(2,32);CHR$(49);STRING$(4,32);
     CHR$(49);STRING$(3,32);CHR$(63);
130  LPRINT CHR$(31);"OVERDUE NOTICE";
     CHR$(30)
140  LPRINT CHR$(11);"1";"NAME:"
150  LPRINT CHR$(11);"1";"ACCT #:"
160  LPRINT "PAYMENTS:"
170  LPRINT "CHR$(11);"1";"TOTAL OUTSTAND-
     ING:"
180  LPRINT CHR$(12);
```

Line 20 loads channel 12.

Lines 30-40 set form length (18 lines) and top of form.

Line 50 prints at doubled condensed width (8.5 CPI), then returns to standard print (10 CPI).

Lines 60, 80 and 90 tab to the next stop in channel 12 and print.

Line 100 advances to the top of the next form.

Lines 110-120 reset form length (12 lines) and top of form.

Line 125 cancels the channel loaded in line 20 and loads channel 1.

Line 130 prints at double width (5 cpi), then returns to standard print.

Lines 140, 150 and 170 tab to the next stop in channel 1 and print.

Line 180 advances to the top of the next form.

Here's the printout:

```
STATEMENT


NAME:
ADDRESS:


ITEM                          PRICE



              TOTAL DUE:
```

. . . . . .

```
OVERDUE NOTICE


NAME:

ACCT #:
PAYMENTS:


TOTAL OUTSTANDING:
```

SETTING THE LEFT MARGIN

The printhead normally begins printing at the "home position" – under the "0" on the tear-off bar of the ML92 or the "1" on the column indicator of the ML93. You can use the control code below to set the left margin in multiples of 1/120" up to 999/120" (8.3").

ESC % C	CHR$(27);CHR$(37)	1B 25 3C (30 30
001-999	CHR$(67);"001"–"999"	31-39 39 39) (hex)

– sets the left margin to the indicated multiple of 1/120" from the normal home position

NOTE: You must enter a three-digit number.

ESC % C	CHR$(27);CHR$(37);	1B 25 3C 30 30
001	CHR$(67);"001"	31 (hex)

– cancels any previously set margin; printing starts at home position

NOTE: The left margin cannot be cancelled by using the CAN code (see page 104).

Sample program for setting the left margin:

```
10 LPRINT "PRINTING STARTS AT HOME POSI-
   TION"
20 LPRINT CHR$(27);CHR$(37);CHR$(67);"120"
30 LPRINT "MARGIN SET"
40 LPRINT CHR$(28);"PRINTING STARTS ONE
   INCH (=120/120 IN.)"
50 LPRINT CHR$(29);"FROM HOME POSITION"
60 LPRINT CHR$(27);CHR$(37);CHR$(67);"001"
70 LPRINT CHR$(30);"MARGIN CANCELLED"
```

Here's what the printout looks like:

```
PRINTING STARTS AT HOME POSITON

        MARGIN SET
        PRINTING STARTS ONE INCH (=120/120 IN.)
        FROM HOME POSITION

MARGIN CANCELLED
```

HINTS:

Many word processing systems set the left margin by print columns. Since the width of a print column depends on the width of a letter (1 Pica column = 1/10", 1 Elite column = 1/12", 1 doubled Pica column = 1/5", etc.), changing the character size of a line will change the left margin.

You can set an even margin by running a short BASIC program to reset the printer's margin; then load your word processing program and cancel its margin.

HORIZONTAL TABS

The ML92 and ML93 feature horizontal tab stops similar to those on a typewriter. You set the stops with a line at the beginning of your program, and use an "HT" code to skip to the next tab stop. There are some important differences, which give you extra flexibility. We'll talk about them as they come up.

NOTE: Your computer or software may control horizontal tabs directly; in that case you won't be able to use the printer's horizontal tab feature. Some computers, however, allow you to tab by using CHR$(137), 89 (hex), instead of the standard HT code, CHR$(9). See your computer manual for details.

Character Column Tabs

Here's the loading sequence for setting standard (character column) tabs:

ESC HT TAB_1 TAB_2. . .CR	CHR$(27);CHR$(9); "TAB_1, TAB_2. . ."; CHR$(13)	1B 09 TAB_1 TAB_2. . . 0D (Hex)

— sets tab stops at character columns TAB_1, TAB_2, etc.

NOTES: The column number must be a three-digit number. If you're programming in hexadecimal, keep in mind that each digit must be represented by a two-digit hexadecimal number.

You can set up to 16 tab stops. Tab stops must be entered in left-to-right sequence; that is, in ascending numerical order.

The location of the right-most possible tab stop depends on the printer model (the ML93 has a wider carriage than the ML92) and the character size you're using (there are more characters on a line at 17.1 characters per inch than at 10 cpi). This chart shows the possible combinations.

Model	Right-most Column Number (Maximum Columns Per Line) at 10 CPI	12 CPI	17.1 CPI
ML92	80	96	136
ML93	136	163	233

If you try to skip to a tab stop set beyond the width of the page — or if you try to skip to a tab where none was set — the printer will advance the paper one line and begin printing at the first column of the next line.

To skip to the next tab stop, use this code in your program:

HT	CHR$(9)	09 (hex)
	— moves printhead to the next tab stop on the line	

Here's an example:

```
10  LPRINT CHR$(27);CHR$(9);"010, 020, 030";
    CHR$(13)
20  LPRINT "1";CHR$(9);"10";CHR$(9);"20";
    CHR$(9); "30"
```

Line 10 sets tab stops at columns 10, 20, and 30.

Line 20 prints "1" in the first column, tabs to the first tab stop at column 10 [CHR$(9)] and prints "10" there, tabs to column 20 and prints "20", then tabs to column 30 and prints "30".

Here's the result:

```
1         10        20        30
```

Try adding:

```
15 LPRINT CHR$(28);
```

to change to 12 cpi, and RUN the program. Then modify the line to:

```
15 LPRINT CHR$(29);
```

to change to 17.1 cpi, and RUN the program.

Notice the difference:

```
1         10        20        30
1       10        20        30
1    10      20      30
```

Each time the "HT" code skips the same number of columns, but the width of the columns changes.

To clear tab stops, use this code sequence:

ESC HT CR	CHR$(27);CHR$(9);CHR$(13) — clears character column tab stops	1B 09 OD (hex)

NOTE: The CAN code will NOT clear tab stops (see page 104).

Dot Column Tabs

This feature lets you set tab stops by dot column, the distance between the center of one dot and the center of a dot in the next column. If you've used the "character spacing" feature (page 80) to create proportional spacing, dot column tabs will help you keep columns of information straight. You can use dot column tabs with either Correspondence Quality or Data Processing printing.

Use this code to set dot-column horizontal tabs:

ESC EXT TAB_1 TAB_2. . .CR	CHR$(27);CHR$(3); "TAB_1, TAB_2. . ."; CHR$(13) — sets tab stops at dot columns TAB_1, TAB_2, etc.	1B 03 TAB_1 TAB_2. . .0D (hex)

NOTES: The dot column numbers must have four digits. If you're programming in hexadecimal, keep in mind that each digit must be represented by a two-digit hexadecimal number. Tab stops must be entered in ascending numerical order. You can set up to 16 tab stops.

Use this code to skip to the next tab stop:

HT	CHR$(9) — skip to next tab stop	09 (hex)

This code is identical to the one used for character column tabs. Sample program for dot column tabs:

```
10 LPRINT CHR$(27);CHR$(3);"0100, 0200, 0300";
   CHR$(13)
20 LPRINT "1";CHR$(9);"100";CHR$(9);"200";
   CHR$(9);"300"
```

Here's the result:

```
1          100        200        300
```

As with character column tabs, the width of a dot column changes when you change character size (the characters are made narrower by reducing the distance between dot columns). For reference, this chart shows the width of a dot column for the three character sizes:

	Character Size		
	10 cpi	12 cpi	17.1 cpi
Dot column width	1/120"	1/144"	1/206"

To clear dot column tabs, use this code sequence:

ESC HT CR	CHR$(27);CHR$(9);CHR$(13)	1B 09 0D (hex)

—clears dot column tabs

NOTE: The CAN code does NOT clear dot column tab stops (see page 104).

Summary

For your future reference, here's a summary of the control codes for horizontal tabs:

Set tabs:

Character column

ESC HT TAB_1 TAB_2. . .CR	CHR$(27);CHR$(9); "TAB_1, TAB_2. . ."; CHR$(13)	1B 09 TAB_1 TAB_2. . . 0D (hex)

Dot column

ESC ETX TAB_1 TAB_2. . .CR	CHR$(27);CHR$(3); "TAB_1, TAB_2. . ."; CHR$(13)	1B 03 TAB_1 TAB_2. . .0D (hex)

Skip to next tab stop:

Character/dot column

HT	CHR$(9)	09 (hex)

Clear tab stops:

Character/dot column

ESC HT CR	CHR$(27);CHR$(9); CHR$(13)	1B 09 0D (hex)

INDENTING

This feature lets you indent one line of print for the beginning of paragraphs, positioning headings, etc. The amount of indentation is figured in *dot columns:* the distance from the center of one dot to the center of the next within a character pattern. This distance is different for different character sizes; the following table shows the measurements for each size:

	Character Width		
	10 CPI	12 CPI	17.1 CPI
Width of Dot Column	1/120"	1/144"	1/206"

Use this code sequence for indenting:

ESC % B Col. #;	CHR$(27);CHR$(37); CHR$(66);"Col.#"; — indents one line by the specified number of dot columns	1B 25 42 Col. # (hex)

NOTE: The number of dot columns must contain *four* digits and cannot be past the right margin. If you're programming in hexadecimal, keep in mind that each digit must be represented by a *two-digit* hexadecimal number. Be sure to include the semicolon at the end of this code sequence; otherwise the command will not work.

Sample program for indenting:

```
10 LPRINT CHR$(27);CHR$(37);CHR$(66);"0030" ;
   "This line is indented 30 dot columns."
20 LPRINT "This line is not indented."
```

This is the result:

```
   This line is indented 30 dot columns
This line is not indented.
```

Try adding lines at the beginning to change character width and compare

at 12 CPI:

```
    This line is indented 30 dot columns
This line is not indented.
```

at 17.1 CPI:

```
This line is indented 30 dot columns
This line is not indented.
```

Notice that the actual amount of indentation changes when you change character size, but the indentation relative to the next line stays the same.

CARRIAGE RETURN AND LINE FEED

These functions are normally added automatically by your computer at the end of a line, but there are times when you may want to put them in your program.

LF	CHR$(10) Line Feed: advances paper one line	0A (hex)
CR	CHR$(13) Carriage Return: tells printer to print the line of data and returns the printhead to the left side of the page.	0D (hex)
ESC DC2	CHR$(27);CHR$(18) Line Feed *without* Carriage Return: tells printer to print the line of data and advances paper one line, but does not return the printhead to the left side of the paper.	31 12 (hex)

NOTE: Normally, the computer — or your printer — is set to add a Line Feed command to each CR code. If your printer prints several lines without advancing the paper, set Switch 6 to ON (located inside the printer as described on pages 27-30).

CANCEL

This code will eliminate a line of data if it hasn't yet been printed. It will also cancel any special printing features in effect except:

horizontal tabs
vertical format unit
left margin
downline loadable characters

You can use it at the end of a program to reset the printer to default printing (see page 63).

CAN CHR$(24) 18 (hex)
— clears buffer and resets printer to default state

Sample program using the CAN command

```
10 LPRINT CHR$(27) ;CHR$(49) ;CHR$(31) ;"CQ,
   DOUBLE WIDTH"
20 LPRINT CHR$(24)
30 LPRINT "Back to Data Processing, 10 CPI"
```

Here's the printout:

```
CQ, DOUBLE WIDTH

Back to Data Processing, 10 CPI
```

PRINT SUPPRESS MODE

This feature lets you temporarily "disconnect" your printer from your computer by sending it a control code through your program. After it receives the "DC3" code, the printer will ignore any data it gets until it receives a "DC1" code which releases it from the Print Suppress state.

DC3	CHR$(19) Enter Print Suppress mode: printer ignores all data except DC1.	13 (hex)
DC1	CHR$(17) Releases printer from Print Suppress mode: printer able to print data.	11 (hex)

NOTES: Some computers use the DC1 and DC3 codes to control functions other than the Print Suppress mode. Check your computer manual to see if this is true for yours; if it is, your printer may get a DC3 code when you don't want it to and you'll lose data. To solve this problem, set jumper plug SP2 to the A side (see page 31 for details) – this will make the printer ignore the DC1 and DC3 codes entirely.

Be sure you're clear on the difference between Print Suppress mode – controlled by DC3 and DC1 codes – and the select and deselect states, which are controlled by the SEL button on the front of the printer. When the printer enters Print Suppress mode (DC3), it continues to receive data, but it doesn't store or print it – so the data is lost. The SEL light will not go out. When you push the SEL button, the SEL light goes out and the printer stops receiving data until you push the button again, but no data is lost.

CUSTOM-DESIGNED CHARACTERS: THE DOWNLINE LOADABLE CHARACTER GENERATOR

In addition to their standard 96-character set, the ML92 and ML93 have a separate printer memory reserved for extra characters you may want to use for special purposes. You can create and store up to 96 symbols, or design a 96-character font, like Italics. However, and VERY IMPORTANTLY, the downline loadable character generator is contained in volatile memory — which means that once the printer is turned off, anything stored there is erased.

Don't panic — that doesn't mean that every time you need a special symbol or character you have to go through this procedure, or that you have to keep your printer turned on forever. What it does mean is that the information in the downline loadable character generator (DLCG for short) must be stored on your disk or other storage device and transmitted to your printer whenever you want to use it.

So you can see you have some work ahead of you. First, you have to design your character or symbol as a dot pattern on a matrix. Then you have to translate the pattern into numerical data the printer (and your computer) can understand. After that you have to assign it to a specific address — so you know where to find it when you need it. Finally you have to put it into a program to "load" the information into the printer's memory — and of course save the program in a permanent storage device, like your computer's disk system, so you'll have it when you want it.

That sounds rather difficult, but it's easy once you get the hang of it.

SPECIAL NOTE FOR APPLE OWNERS: If you have an Apple or Apple-compatible computer, OKIDATA's PERSONAL TOUCH Downline Loading Design Kit makes it even easier to use the DLCG. It's a completely menu-driven software package that makes it a snap to design characters on your display screen. It comes with ready-made fonts and special character sets. See your dealer for more information.

Designing your Character

Each character you design will ultimately be printed in a pattern called a matrix. The matrix consists of 11 columns,

each with 7 rows of dots, so that there are a total of 77 dot positions available for a character.

IMPORTANT: Please note that all 77 positions aren't available for a single character. You can't place two dots in the same row in adjoining columns. So, for example, you can place a dot in row 1 of columns 1 and 3 or columns 2 and 4, but you can't put dots in row 1 of columns 1 and 2. If you accidentally enter dots on the same row of adjacent columns, the second dot won't be printed.

Okay, now map out your character. Once you've done that, you'll be ready to convert your matrix into data the printer understands. Since we have no idea what kind of character you've designed, we'll use ours to illustrate this next procedure.

Character to be printed:

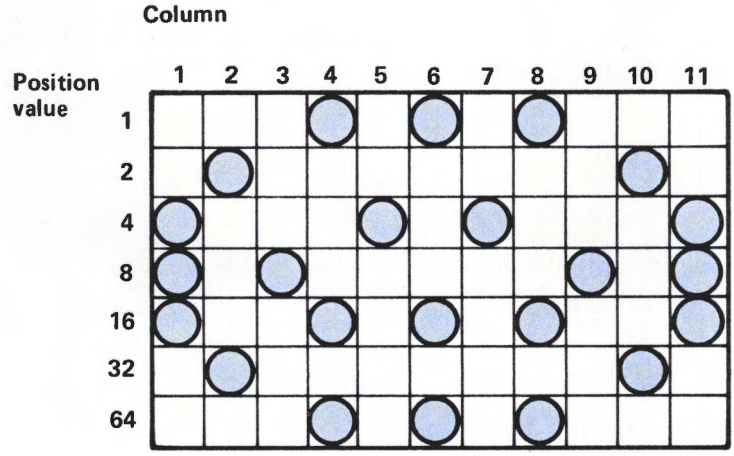

Converting Dot Patterns into Printer Data

The purpose of this step is to translate the dot pattern into a numerical code the printer and computer can understand. To help you do this, we've assigned a numerical value to each row in the matrix. All you need to do is add up the values of the rows where you want a dot to appear in each column. The diagram below shows the proper values.

IF YOU'RE FAMILIAR WITH BINARY NUMBERS: Each column is represented by a 7-bit binary number. (If you're using an 8-bit system, bit 8 is ignored.) A dot is represented by a "1" and a blank space is "0"; the top dot is the LSB (Least Significant Bit), and the bottom dot is the MSB (Most

Significant Bit). The bit positions are shown in the table below for reference. You can use the ASCII code chart as a reference.

Row	Dot Position in Column	Decimal Value	Bit
1		1	2^0 LSB
2		2	2^1
3		4	2^2
4		8	2^3
5		16	2^4
6		32	2^5
7		64	2^6 MSB

For example, in column 1 of our character, there are dots in rows 3, 4, and 5, so add:

$$\begin{array}{r} 4 \\ +\ 8 \\ +\ 16 \\ \hline 28 \end{array}$$

In column 2, there are dots in rows 2 and 6, so add:

$$\begin{array}{r} 2 \\ +\ 32 \\ \hline 34 \end{array}$$

Continue for the whole pattern:

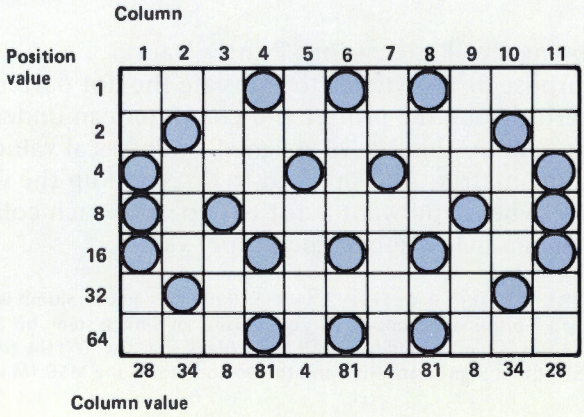

Ascenders and Descenders

We said that the character matrix has 7 rows. This is true — sort of. You can print only 7 rows, but the matrix actually has 9 rows — 2 rows below the print line, which run across the bottom of row 7. An "ascender" character prints in rows 1 through 7 and thus "sits" on the print line. "Descender" characters — like g,j,p,q, and y — extend *below* the print line, so they print in rows 3 through 9. If you want to print the same character as both an ascender and a descender, the numerical data for the columns would be the same — only the code sequence to load the data would be different. We'll load our character both ways to show this.

Loading the Data

This is the sequence to start loading an ascender character:

ESC % A	CHR$(27);CHR$(37); CHR$(65) —Start loading ascender character	1B 25 41 (hex)

Next, choose a character from the standard character set to represent your new character. Any character on the ASCII chart numbered between 32 and 127 will do.

NOTE: You will NOT lose the use of the ASCII character you've chosen. You're simply using it to designate the new character when you're in the downline loadable character set.

Let's pick the letter "M."

Our LPRINT statement starts like this:

```
LPRINT CHR$(27);"%A";"M";
```

Next comes the column data:

```
LPRINT CHR$(27);"%A";"M";CHR$(28);CHR$(34);
   CHR$(8);CHR$(81);CHR$(4);CHR$(81);CHR$(4);
   CHR$(81);CHR$(8);CHR$(34);CHR$(28)
```

The statement automatically ends after the data for the 11th column. You *must* include data for all 11 columns and you must use a separate statement for each character you want to load.

To load a descender character, start with this sequence:

ESC % D	CHR$(27);CHR$(37); CHR$(68) —Start loading descender character	1B 25 44 (hex)

Let's load the same character as a descender, using "m" as the representation:

```
LPRINT CHR$(27);"%D";"m";CHR$(28);CHR$(34);
   CHR$(8);CHR$(81);CHR$(4);CHR$(81);CHR$(4);
   CHR$(81);CHR$(8);CHR$(34);CHR$(28)
```

Printing Downline Loadable Characters

This code sequence switches to the downline loadable character set:

ESC 2	CHR$(27);CHR$(50) —Switch to downline loadable character set	1B 32 (hex)

Any character after this will print as a DLCG character until you switch back to Data Processing printing — CHR$(27);CHR$(48) — or to Correspondence Quality printing — CHR$(27);CHR$(49).

NOTE: After you have switched to the downline loadable character set, the printer will print only the characters you've designated and loaded — it will *not* print any of the standard characters until you switch back to Data Processing or Correspondence Quality printing. If you switch to the downline loadable character set without having loaded any characters or if you forget to switch back to one of the standard character sets, the printhead will move, but nothing will be printed.

Example

This program loads our new character as both an ascender and descender character and prints a sample. Notice the difference in position relative to the normal print line.

```
10 LPRINT CHR$(27);"%A";"M";CHR$(28);CHR$(34);
   CHR$(8);CHR$(81);CHR$(4);CHR$(81);CHR$(4);
   CHR$(81);CHR$(8);CHR$(34);CHR$(28)
20 LPRINT CHR$(27);"%D";"m";CHR$(28);CHR$(34);
   CHR$(8);CHR$(81);CHR$(4);CHR$(81);CHR$(4);
   CHR$(81);CHR$(8);CHR$(34);CHR$(28)
```

```
30 LPRINT "NORMAL SET MMMmmm ";CHR$(27);
   "2";"MMMmmm";CHR$(27);"0";"NORMAL
   AGAINMMM"
```

The printout looks like this:

```
NORMAL SET MMMmmm ◆◆◆◆◆◆NORMAL AGAINMMM
```

APA GRAPHICS

With APA (All-Points Addressable) graphics, you can "draw" almost any kind of illustration with your printer. The easiest way is to use a graphic software package which creates an image on your display screen and "dumps" it onto the page. A growing number of these packages will work well with your MICROLINE; when you run the "setup" part of your package, look for something like "OKIDATA ML92" OR "ML93" on the printer menu.

If you have an Apple or Apple-compatible computer, we recommend OKIGRAPH II™ – a special package that lets you print the Apple screen easily. See your dealer for more information.

This section tells you how to program graphic images "by hand." Once you understand the fundamentals, the results you can get will be limited only by your imagination.

Programming Graphics

This control code turns on the printer's graphic mode:

ETX	CHR$(3)	03 (hex)
	—Enters graphic mode	

In this mode, when you send an ASCII code to the printer, instead of printing a letter or number (or doing something like changing character size), it will print a pattern of dots in a single column. This continues until the printer receives this control code:

ETX STX	CHR$(3);CHR$(2)	03 02 (hex)
	—Exits graphic mode	

Let's try it once to see what's going on. Check the ASCII code chart and you'll see that the ASCII code for "A" is 65. Try this program:

```
10 LPRINT CHR$(65)
20 LPRINT CHR$(3);CHR$(65);CHR$(3);CHR$(2)
```

This is what should happen when you RUN the program:

Line 10 prints CHR$(65) as a letter "A." In line 20, CHR$(3) puts the printer into graphic mode; CHR$(65) then comes out as a single column dot pattern. CHR$(3); CHR$(2) switches back to normal, or "text," printing mode.

The next question is: how do you know what code number to send for the particular dot pattern you want? To start with, each column has 7 dot positions, and each position has a numerical value, as shown in the table below. All you have to do is add the values for the positions where you want a dot to appear and enter the total into your program.

IF YOU'RE FAMILIAR WITH BINARY NUMBERS: Each column is represented by a 7-bit binary number. (If you're using an 8-bit system, bit 8 is ignored.) A dot is represented by a "1" and a blank space is "0"; the top dot is the LSB (Least Significant Bit), and the bottom dot is the MSB (Most Significant Bit). The bit positions are shown in the table below for reference. You can use the ASCII code chart as a reference.

Row	Dot Position in Column	Decimal Value	Bit
1		1	2^0 LSB
2		2	2^1
3		4	2^2
4		8	2^3
5		16	2^4
6		32	2^5
7		64	2^6 MSB

Example:

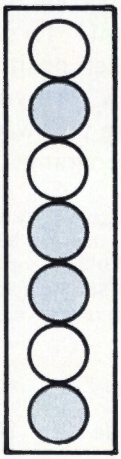

Dot position in column	Decimal value
	2
	+ 8
	+16
	+64

Enter	90 as CHR$(90)

The easiest way to design an image is to lay it out on graph paper. Let's try a simple box pattern like this:

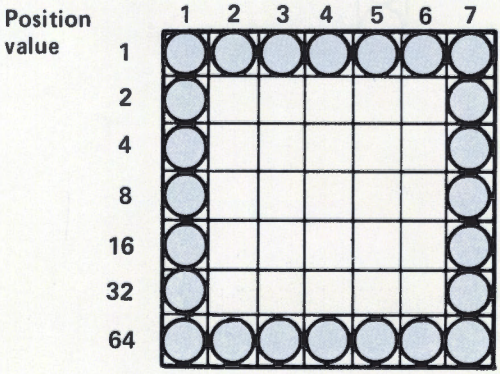

Next, add up the decimal values of the positions where you want dots to appear:

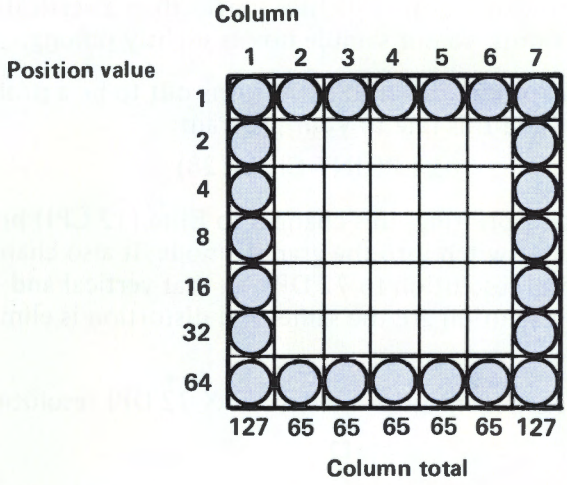

Our LPRINT statement begins with CHR$(3) to enter graphic mode, then includes the decimal values of the 7 columns and ends with CHR$(3);CHR$(2) to exit graphic mode:

```
10 LPRINT CHR$(3);CHR$(127);CHR$(65);CHR$(65);
   CHR$(65);CHR$(65);CHR$(65);CHR$(127);CHR$(3);
   CHR$(2)
```

If your version of BASIC has the STRING$ function, you can make life easier by using STRING$(5,65) instead of repeating CHR$(65) 5 times.

Here's what you should get when you RUN it:

□

A Word about Resolution

Notice that our sample box isn't exactly square, even though it's 7 dots high and 7 dots wide. This is because the spacing of the dots — or "resolution" — is different horizontally and vertically.

A quick explanation should clear things up. Each dot is 1/72" in diameter. Resolution — how closely spaced the dots are — is measured in dots per inch (DPI). The *vertical*

graphic resolution is 72 DPI – in other words, the dots just touch each other. The *horizontal* resolution, however, is 60 DPI, so the dots don't quite touch. This means that a horizontal row of 7 dots is slightly longer than a vertical column of 7 dots, so our sample box is slightly oblong.

There's an easy way to fix this if it turns out to be a problem. Simply add this line to your program:

```
05 LPRINT CHR$(28)
```

In normal text printing, this changes to Elite (12 CPI) printing; when you switch into the graphic mode, it also changes the horizontal resolution to 72 DPI, so that vertical and horizontal resolution are the same, and distortion is eliminated.

Here's our sample image printed at 72 X 72 DPI resolution:

NOTE: If you're using an "intelligent interface" – such as OKIDATA's APPLE PLUG 'N PLAY Kit – to print screen dumps, 72 X 72 DPI resolution will give you a more accurate representation of the screen image.

Let's try another example. This one uses a FOR – NEXT loop to print all the possible dot patterns in sequence:

```
10 LPRINT CHR$(30)
20 LPRINT CHR$(3)
30 FOR I = 1 TO 256
40 LPRINT CHR$(I);
45 IF I = 3 THEN LPRINT CHR$(3);
50 NEXT I
60 LPRINT CHR$(3);CHR$(2)
```

Line 10 makes sure the printer is set for 10 CPI (= 60 X 72 DPI).

Line 20 switches the printer into graphic mode.

Lines 30-50 print the dot patterns for the values 1 through 256.

Line 45 makes sure that the dot pattern for the value 3 is sent as CHR$(3);CHR$(3) (see NOTES on page 117).

Line 50 switches the printer out of graphic mode.

Here's the result:

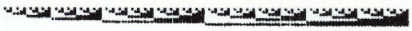

Try changing to 72 X 72 DPI resolution — change line 10 to LPRINT CHR$(28) — and compare the printout:

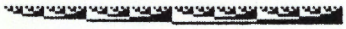

NOTES: When the printer is in graphic mode, any ASCII code sent to the printer will be printed as a column of dots. Many computers automatically send a Carriage Return and a Line Feed code after the 80th or 132nd code number; these would be printed as dot patterns. Check your computer manual to find out how to override this feature. (The most common method is a WIDTH statement.)

If you want to print the pattern represented by CHR$(3), enter it twice in your program, like this:

```
CHR$(3);CHR$(3)
```

Multiline Graphics

Up until now, we've been sticking to single-line images; after exiting graphic mode at the end of the line, the computer inserts a Carriage Return code, which tells the printer to print the line, and a Line Feed code, which advances the paper. But you can print more than one line of graphic data without returning to the normal ("text") mode. All you need are these special Line Feed codes:

ETX SO	CHR$(3);CHR$(14) —Graphic Line Feed with Carriage Return: prints the line, advances paper 7/72" and returns printhead to left margin.	03 0E (hex)
ETX DC4	CHR$(3);CHR$(20) —Graphic Line Feed without Carriage Return: prints the line, advances paper 7/72" but does not return printhead to left margin	03 14 (hex)

Why a 7/72" line feed? Because a line of graphic printing is 7/72" high, so a normal line feed (1/6" or 1/8") would leave a gap between lines.

If you want to use a normal text line feed with graphics, add these codes:

ETX LF	CHR$(3);CHR$(10) —Text Line Feed with Carriage Return: prints graphic line, advances paper one line (1/6" or 1/8") and returns printhead to left margin	03 0A (hex)
ETX DC2	CHR$(3);CHR$(18) —Text Line Feed without Carriage Return: prints graphic line, advances paper one line (1/6" or 1/8") but does not return printhead to left margin.	03 12 (hex)

The following example demonstrates these line feed codes using our original box image as a subroutine:

Sample graphics program:

```
 10 LPRINT CHR$(30)
 20 LPRINT CHR$(3);
 30 FOR J = 1 TO 2
 40 GOSUB 250
 50 LPRINT CHR$(3);CHR$(14);
 60 NEXT J
 70 FOR K = 1 TO 2
 80 GOSUB 250
 90 LPRINT CHR$(3);CHR$(20);
100 NEXT K
110 LPRINT CHR$(3);CHR$(14);
120 FOR L = 1 TO 2
130 GOSUB 250
140 LPRINT CHR$(3);CHR$(10);
150 NEXT L
160 FOR M = 1 TO 2
180 GOSUB 250
190 LPRINT CHR$(3);CHR$(18);
200 NEXT M
210 LPRINT CHR$(3);CHR$(2)
```

```
220 STOP
250 LPRINT CHR$(127);STRING$(5,65);CHR$(127);
260 RETURN
```

Lines 250-260 are the subroutine to print the box. There are four loops; each one prints two boxes separated by a

Graphic line feed with carriage return (30-60)

Graphic line feed without carriage return (70-100)

Text line feed with carriage return (120-150)

Text line feed without carriage return (160-200)

Here's what the printout looks like:

The Microline 92 and 93 printers are virtually maintenance-free so that you don't need a BSEE degree to keep them in excellent condition. Although we have a few suggestions that will help your printer, they are by no means mandatory to perform.

—Each time you change the ribbon, take a premoistened towelette and wipe off the paper feed area below the platen where paper lint may accumulate.

—About every six months (if you have a steady hand) place a small drop of 10/30 weight lubricating oil on the lower carriage shaft. Then slide the printhead (after it has cooled for at least five minutes) along the shaft to spread the drop of oil evenly on the bar. Remember, just the smallest drop will do—too much will cause all sorts of headaches. For example, using too much oil or oiling more than the lower carriage shaft could result in:

Blurry printing from oil on the ribbon or ribbon rollers.

Poor operation from oil on the microswitch or home sensor.

Stained paper from oil on the platen, pressure roller or pin tractor.

Poor printing from oil on the synchro belt, belt pulley teeth or ribbon drive assembly.

So you can see, it's best to use the oil sparingly or have your dealer assist you.

Troubleshooting

Q. The paper does not advance. Why not?

A. If a tractor feed unit is installed, check to see if the pins are properly engaged with the paper.

Q. Why is the paper lamp on?

A. The printer is out of paper. If paper is correctly inserted and the light does not go out, contact your dealer. The ROM memory check may have located a fault.

Q. Why does the paper tear when it advances?

A. The paper you are using may not meet the specifications outlined in Appendix H. You may also have the paper installed improperly or the head gap incorrectly set.

Q. The power light is out. Why?

A. The printer's power cord may be loose or unplugged. Before plugging it back in, make sure the power switch is off.

Q. The print is fading. Why?

A. Sounds like it's time for a new ribbon or you may have it installed wrong.

Q. I have a RS232-C interface and I can't get my printer to run properly. What's wrong?

A. Check the following connections:

Is the printer's pin #1 grounded to the system?

Is there a jumper wire connecting the printer's pin #6 to pin #20?

Did you check your computer documentation to see if there should be additional jumper wires on the computer's side?

If you are still having problems, contact your dealer for the OKIDATA USERS TIPS which are designed to show you how to connect your specific computer to the ML92 and 93.

Q. Why does the printhead move whenever I turn the printer on?

A. That's okay. It's returning to the HOME position to begin printing.

Q. Why isn't the printhead moving when data is being sent from the computer?

A. You may have the printer OFF LINE (SEL lamp out.) If not, a fuse may have blown on the driver board. Contact service.

APPENDIX A Making a Parallel Interface Cable

There are several methods of making a cable to connect your printer and computer. However, all of them require a level of knowledge in electronics—signals, wiring, soldering, crimping—to design properly.

The information we are providing here is given to assist the experienced in identifying the printer's configuration and wiring requirements. Even if you are not making your own cable, you may need to pass this information on to the dealer or technician who is making one for you.

Parallel Interfacing

The Microline 92 and 93 require a Centronics-equivalent parallel interface cable with the following:

Amphenol 57-30360 or AMP 552274-1 (or equivalent) plug with 36 pins

AMP 552073-1 (or equivalent) cover

Beldon (or equivalent) shielded cable, maximum 5 1/2 yards, with twisted pair conductors. UL and CSA approved.

These are the signals for each pin assignment on the parallel cable. Remember, Appendix D gives all the details on parallel cabling and switch settings for several popular computer systems.

Pin #	Signal	Return Pin #	Direction	Description
1	$\overline{\text{Data Strobe}}$	19	To printer	STROBE pulse of read data in. Pulse width must be more than 0.5 μs at receiving terminal. The signal level is normally high; read-in of data is performed at the LOW level of this signal.
2 3 4 5 6 7 8 9	Data 1 Data 2 Data 3 Data 4 Data 5 Data 6 Data 7 Data 8	20 21 22 23 24 25 26 27	To printer To printer To printer To printer To printer To printer To printer To printer	These signals represent information of the 1st to 8th bits of parallel data respectively. Each signal is at HIGH level when data is logical "1" and LOW when logical "0". Data bit 8 can be grounded for 7 bit systems by setting jumper plug SP1 to side A. (See page 31.)
10	$\overline{\text{Acknowledge}}$	28	From printer	Approximately 5 μs LOW pulse. LOW indicates that data has been received and that the printer is now ready to accept other data.
11	Busy	29	From printer	A HIGH signal indicates that the printer cannot receive data. The signal becomes HIGH in the following cases: 1. during data entry 2. during printing 3. in OFF LINE state 4. during printer error status

Pin #	Signal	Return Pin #	Direction	Description
12	Paper End	30	From printer	A HIGH signal indicates that the printer is out of paper.
13	Select	No return	From printer	This signal indicates that the printer is ready to receive data.
14	0V	No return	Ground	Logic ground
15	Not used			
16	0V	No return	Ground	Logic ground
17	Chassis Ground	No return	Ground	Printer's chassis ground. In the printer, the chassis ground and the logic ground are isolated from each other.
18	+5V		From printer	+5V supply (50mA max.)
19-30	0V		Ground	Twisted pair return signal ground level.
31	$\overline{\text{I-Prime}}$		To printer	Clear/reset/initialize. Low pulse.
32	$\overline{\text{Fault}}$		To printer	The level of this signal is LOW when the printer: 1. is in the paper end state 2. is in the OFF LINE state 3. is in the error state
33	0V	No return		Logic Ground
34-36	Not used			

APPENDIX B Setting The High Speed RS232-C Interface Switches

Setting up a high speed RS232-C interface cable requires a great deal of technical know-how. There are seven protocols to choose from and three wires available to monitor the printer's busy signals. If you are unsure of the proper switch settings after reading this section, contact your dealer for assistance.

You will find two switch banks on the high speed RS232-C board which have to be set to match your computer's requirements. We have provided the switch settings for several popular computers systems in Appendix D of this manual and as Users Tips available from your dealer. If you would prefer to learn how to set them yourself, we have explained each switch below.

There are 16 switches on the serial interface board located on adjacent switch banks. They are labeled SW1, 1 through 8 and SW2, 1 through 8. To make it easier for you we have labeled them 1-8 then 9-16. See Figure B-1.

Switch 1: Regulates parity from the computer. Your computer sends data in odd or even parity, with or without parity. If it doesn't use parity, then the setting of this switch doesn't matter—the printer will run either way. However, for odd parity applications, set Switch 1 to ON and for even parity, set Switch 1 to OFF.

Switch 2: Selects whether the computer is sending data with or without parity. If the switch is ON, the printer will not expect parity data. If Switch 2 is OFF, the printer expects parity and Switch 1 will regulate whether it's odd or even.

Switch 3: Along with the jumper plugs on the control circuit board (see page 31), this switch selects 7 or 8 bit data. The ON side calls for 7 bit data. The OFF side calls for 8 bit data. Make sure jumper plug SP1 agrees with this selection.

APPENDIX B

MLPD interface circuit board

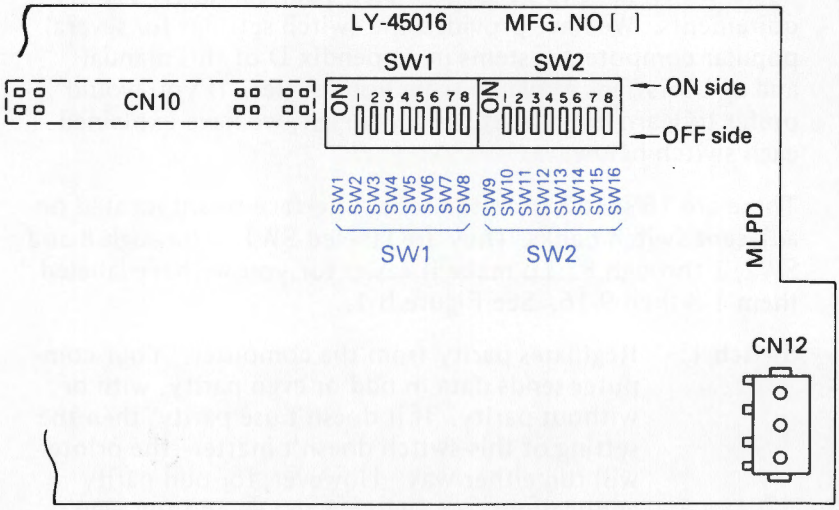

Figure B-1

Switches 4-7: Determine the transmission speed between computer and printer, ranging from 110 to 9600 baud. Check your computer documentation for the proper baud rate setting, then find it on the chart below and set the switches accordingly.

BAUD	4	5	6	7
9600	ON	OFF	OFF	OFF
4800	OFF	ON	ON	ON
2400	OFF	ON	ON	OFF
1200	OFF	ON	OFF	ON
600	OFF	ON	OFF	OFF
300	OFF	OFF	ON	ON
200	OFF	OFF	ON	OFF
150	OFF	OFF	OFF	ON
110	OFF	OFF	OFF	OFF

Switch 8: Is designed for computers which use a "block" protocol where a carriage return (CR) or a line-feed (LF) command will define a block of data. If Switch 8 is ON, (and either protocol ⓐ or ⓑ has been selected) when the printer receives a CR it will send a busy signal to the computer and print the buffer. If Switch 8 is OFF (and either protocol, ⓐ or ⓑ has been selected), when the printer receives an LF it will send a busy signal to the computer and will print the print buffer.

Switches 9 to 11: Work together to determine the protocol selection. The seven choices are outlined on the next page followed by the correct settings for each protocol.

Protocols Every computer system uses a "protocol" to send and receive data. A protocol is a method of transmitting data to the printer—block-by-block or by a set number of bytes. Generally speaking, older computer systems use what we refer to as "block" protocols. (Protocols ⓐ , ⓑ , ⓒ , ⓔ .) Each block of data sent to the printer is identified by a command at the

beginning (SOH or ETX) and/or a command at the end (CR, LF, ETX). Each block of data is also limited to either a maximum of 2048 or 256 characters (depending on the setting of Switch 16. See page B-8.)

The computers on today's market commonly use protocols that are "Unblocked." Unblocked protocols do not use a command to specify a block of data and there is no block length limitation. (Protocols ⓓ and ⓕ .) The printer continues to accept data from the computer until the print buffer has room left for no more than 256 characters. At that time the printer sends a busy signal to the computer, stopping transmission of any more data until the print buffer is emptied or 200ms have elapsed (whichever is longer).

ⓐ Printer Ready/Busy (OKI SIMPLEX BUSY):

A block protocol that permits the computer to transmit data until the print buffer can hold only 256 more characters. It then searches for a carriage return (CR) or linefeed (LF) command (depending on the setting of Switch 8) and, upon receipt, sends out a busy signal to advise the computer to stop transmitting until the buffer is empty. When a parity or framing error occurs, it is substituted by the @ or ^ sign respectively.

For baud rate settings of 4800 or higher, the printer's busy signal comes on when the block end code is received and remains on until the buffer becomes empty.

Set Switches 9 through 11 as follows:

SW9 ON
SW10 ON
SW11 ON

ⓑ Printer Ready/Busy-ACK (OKI SIMPLEX ACK):

A block protocol that permits the computer to transmit data until the printer's buffer can only hold 256 more characters. Each block of data transmitted cannot exceed the printer's buffer size.

A block of data is identified by either a CR or an LF as the block end code (depending on the setting of Switch 8.) When a block is transmitted to the printer, the printer responds with a busy signal for 200ms to acknowledge that the transmission was received. When there are fewer than 256 characters left in the buffer, the printer's busy signal will remain ON until the buffer is emptied. The entire block of data is ignored if a framing or parity error is received.

Set Switch 9 through 11 as follows:

SW9 OFF
SW10 ON
SW11 ON

ⓒ SOH/ETX (CENTRONICS RS232):

A block protocol that uses a Start of Header (SOH) command at the beginning and an End of Text (ETX) character at the end of the block. When the printer reads the ETX character, it sends a busy signal to the computer for 200 ms. Each block of data must be less than the printer's memory size. If there are fewer than 256 character spaces available in the buffer, the printer's busy signal remains on after the receipt of the ETX character. It is also on when the printer is deselected. Parity and framing errors are substituted character-for-character with the @ or ^ symbols. If an error occurs, the busy signal will not be turned on; the incorrect data with errors is printed and the computer will retransmit the data.

Set Switches 9 through 11 as follows:

SW9 ON
SW10 OFF
SW11 ON

ⓓ Printer Ready/Busy (CENTRONICS UNBLOCKED):

An unblocked protocol which permits the data to be transmitted until there is room left in the buffer for only 256 more characters. After the threshold has been reached, a busy signal is sent by the printer to the computer until the buffer is emptied. Parity and framing errors are substituted by the @ or ^ signs.

Set Switches 9 through 11 as follows:

SW9 OFF
SW10 OFF
SW11 ON

ⓔ STX/ETX (CENTRONICS BLOCKED SIMPLEX):

A block protocol which uses a Start of Text (STX) command at the beginning of a block and an End of Text (ETX) command at the end. All data outside of this block is ignored. When the printer reads the ETX character, it sends a busy signal to the computer for 200 ms. If an error occurs, the busy signal turns on within 5 ms and remains on for 200 ms. All data in an error block is ignored by the printer and the computer must retransmit the block.

For baud rate settings of 4800 or higher, the busy signal is turned on 200 ms after the ETX is received and remains on until the buffer is emptied and printing ends. If the printer is deselected, data is received until the buffer becomes full and any additional data is ignored.

Set Switches 9 through 11 as follows:

SW9 ON
SW10 ON
SW11 OFF

ⓕ STX/ETX-ACK (CENTRONICS BLOCKED DUPLEX):

A block protocol that transmits blocks of data limited to the memory size of your printer. Each block is identified by a Start of Text character in the beginning and an End of Text (ETX) character at the end. When the ETX is received, a Request to Send (RTS) signal is sent by the printer to the computer. The computer sends a Clear to Send (CTS) signal and the printer, in response, transmits an acknowledge (ACK). When the printer has printed the entire buffer, it drops the RTS signal and transmission begins.

When a parity or framing error occurs, the printer will send a NAK code to notify the computer to retransmit the block of data.

Set Switches 9 through 11 as follows.

SW9 OFF
SW10 ON
SW11 OFF

ⓖ X-ON/X-OFF (DEC DUPLEX):

An unblocked protocol where the printer sends a DC3 (busy) code when the print buffer becomes full (only 256 character spaces remaining.) There is no block length limitation.

When the buffer is cleared, the printer sends a DC1 or X-ON code. Framing and parity errors are substituted character-for-character with the @ or ^ symbols.

Set Switches 9 through 11 as follows:

SW9 ON
SW10 OFF
SW11 OFF

PROTOCOL SWITCH SETTINGS:

Protocol	9	10	11
ⓐ	ON	ON	ON
ⓑ	OFF	ON	ON
ⓒ	ON	OFF	ON
ⓓ	OFF	OFF	ON
ⓔ	ON	ON	OFF
ⓕ	OFF	ON	OFF
ⓖ	ON	OFF	OFF
TEST	OFF	OFF	OFF

See page C-5 for RS232-C interface test

Switch 12: Changes the function of the printer's Data Terminal Ready pin #20 signal. When Switch 12 is ON, pin #20 sends a signal to the computer to advise that the printer is powered on. When Switch 12 is OFF, pin #20 notifies the computer when the printer is in SEL (ON LINE), in DeSELect (OFF LINE) or if it has paper.

Switches 13-14: Work in conjunction to change the polarity of the printer's busy line, pin #11. If Switches 13 and 14 are both ON, the printer's busy signal is a positive (+) HIGH. If Switches 13 and 14 are both OFF, the printer's busy signal is a negative (-) LOW.

Switch 15: Is not used.

Switch 16: Selects the block length for block protocols ⓐ, ⓑ, ⓒ and ⓔ. The ON setting provides for a maximum of 2048 characters in a block of data while the OFF setting allows a maximum of 256 characters.

Also located on the high speed RS232-C board are three jumper plugs. (See Figure B-2.) Two of them are labeled SP1 and SP2, so be careful not to confuse them with the two jumper plugs on the control circuit board—they perform entirely different functions. The third jumper plug, SP3, is

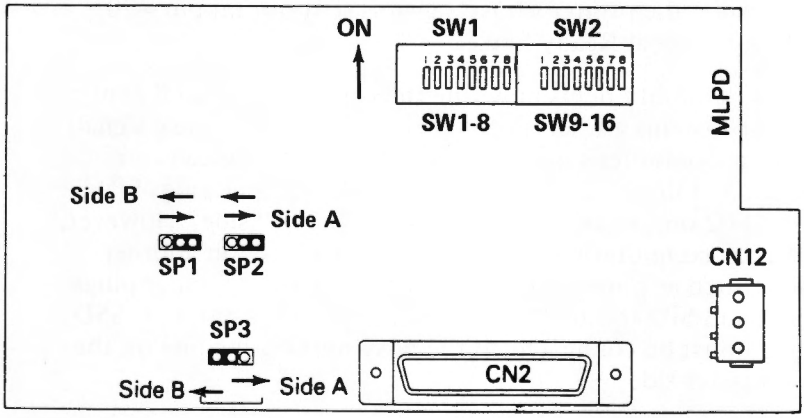
ON
SW1
SW2
1 2 3 4 5 6 7 8
SW1-8
SW9-16
MLPD
Side B
Side A
SP1
SP2
CN12
SP3
Side B
Side A
CN2

Figure B-2

located to the left of the CN2 connector on the component side. SP1 and SP2 are found directly above SP3, to the left of the middle of the board.

SP1 and SP2 are used together to determine on which line the printer sends out a busy signal. If SP1 and SP2 are set to the "A" side, the printer's busy signal is on pin #11, Supervisory Send Data line. If SP1 and SP2 are set to the "B" side, the printer's busy signal is sent out on pin #20, Data Terminal Ready line.

This flexibility helps in wiring the cable since several computer systems are set up to receive the printer's busy signal on the computer's pin #20. When cabling, you can run a straight line across pin #20 by setting jumper plugs SP1 and SP2 on the high speed board to the "B" side. However, if your computer monitors the printer's busy on another line, such as pin #6, Data Set Ready, then set jumper plugs SP1 and SP2 to side "A." Then the printer's pin #11, SSD line, must be connected to the busy monitoring line on the computer side.

SP3 is used for current loop applications to select whether or not to send +5V power supply to pin #18. If SP3 is on side "A" power is not supplied to pin #18. If SP3 is on side "B", +5V is supplied through pin #18.

H.S. Serial Board

Jumper Plugs

	Side A	Side B
SP1/SP2	Printer busy line #11	Printer busy line #20
SP3	+5V not supplied to pin #18	+5V supplied to pin #18

If you purchased a ready-made RS232-C interface cable, go back to pages 33 and 35 for instructions on closing the printer and connecting the cable. If you are making your own interface cable, read on to Appendix C. We've got a lot to tell you.

RS232-C HIGH SPEED FUNCTION SWITCHES

Function Switch	Description	Switch Settings			
		ON		OFF	
1	Parity setting	Odd		Even	
2	With/Without Parity	Without		With	
3	Data Bit	7 Bits		8 Bits	
4-7	TRANSMISSION SPEEDS	SW4	SW5	SW6	SW7
	9600	ON	OFF	OFF	OFF
	4800	OFF	ON	ON	ON
	2400	OFF	ON	ON	OFF
	1200	OFF	ON	OFF	ON
	600	OFF	ON	OFF	OFF
	300	OFF	OFF	ON	ON
	200	OFF	OFF	ON	OFF
	150	OFF	OFF	OFF	ON
	110	OFF	OFF	OFF	OFF
8	Block End Code	CR		LF	
9-11	Protocol	SW9	SW10	SW11	Mode
		ON	ON	ON	a
		OFF	ON	ON	b
		ON	OFF	ON	c
		OFF	OFF	ON	d
		ON	ON	OFF	e
		OFF	ON	OFF	f
		ON	OFF	OFF	g
		OFF	OFF	OFF	Test
12	Changes function of DTR	To use DTR to indicate when printer power is ON		To use DTR to indicate when printer is in SEL or DESELECT or if printer has paper	

RS232-C HIGH SPEED FUNCTION SWITCHES (Continued)

Function Switch	Description	Switch Settings	
		ON	OFF
13-14	Changes Polarity of SSD	BUSY is Positive (High)	BUSY is Negative (Low)
15	CD function	CD is High to receive	CD is ignored
*16	Block length	2048 bytes	256 bytes
*Only for block protocols ⓐ , ⓑ , ⓒ , and ⓔ			

Blue printing denotes factory switch setting

APPENDIX C Making an RS232-C Interface Cable

If you are making your own serial interface cable, there are certain requirements to be satisfied for proper communication between the computer and the printer. You've already set the switches and jumper plugs that regulate protocols, baud rates and character bits. Now, in order to make a cable, you must first know how your computer is configured—as Data Communications Equipment or Data Terminal Equipment.

REMINDER: Cabling may already be shown for your computer system in Appendix D.

Most computer systems are designed as Data Communications Equipment (DCE) so they act as the host—in control of the printer, so to speak. The Microline 92 and 93 are Data Terminal Equipment (DTE). They expect to receive instructions and commands from a host (DCE). So when the computer is a DCE and it's connected to our printer, everything works out fine.

However, like with everything else, there are always exceptions to the rule. A few computers on the market today are set up as DTE's. You can't have a DTE communicating with a DTE, so you have to do some rewiring to "fool" the computer into thinking that the printer is a DCE.

There is one obvious problem. How will you know what your computer is—a DCE or a DTE? It's doubtful that your computer documentation will specify it, so once again, we recommend that you refer to Appendix D where we show you how to configure several of the popular computers to operate with the ML92 and 93. If your system isn't there, try wiring it as a DCE. It won't hurt to run it that way, in fact, chances are you'll be right. Then if it doesn't work, add the additional wire to configure it as a DTE.

Before we show you sample high speed RS232-C cabling configurations, here is an overview of the signals to be satisfied on the printer's side. Since requirements vary from one computer system to another, we can't identify the connections your computer requires or even which pins they represent. However, our sample configurations may assist you in sorting it all out.

Signal	EIA	Description
PG	AA	This signal is pin #1 and is connected to eliminate noise in transmission as well as to prevent electrical shock in case of a short circuit. Your computer's documentation may also describe this as FG (Frame Ground), CG (Chassis Ground), or EG (Earth Ground).
TD	BA	This signal is serial data being transmitted from one device to another. The TD (Transmit Data) line on your computer will probably be pin #2 or #3, and may also be labeled XMIT data or TXD. This line must always be connected to the printer's pin #3, receive data line.
RD	BB	This signal is serial data received by a device and may also be labeled REC data or RXD. Your computer's receive data line does not have to be connected to the printer's TD line, pin #2, unless you are running in the X-ON/X-OFF or STX/ETX-ACK protocols.
CTS	CB	This pin is also commonly used to monitor your printer's busy line, pin #11, when your system does not have a DTR line.
DSR	CC	This pin (#6 on the printer) is used by the computer to notify the printer that it is ready for transmission. This wire is connected to the printer's pin #11 when your system does not have a DTR or a CTS signal.
SSD*	---	This signal is the printer's pin #11 and, as indicated earlier, is also referred to as printer busy. This line becomes active when the printer's buffer is full and can no longer receive data from your computer. This pin will usually be connected

to your computer's pin #20. Refer to the jumper plug settings on page B-8 for more information regarding this line.

DTR	CD	This is pin #20 on your printer. The Data Terminal Ready line is used by most computers to monitor the printer's busy line. If your computer does use pin #20 this way, selecting side "B" on high speed board jumper plugs SP1 and SP2 will allow you to connect the computer's line #20 to the printer's pin #20 as the busy line. This will eliminate jumpering pins #6 to #20 on the printer's side. If your system does not monitor the printer's busy line on the DTR line, consult your computer manual to see what pin it actually uses.

*OKIDATA printers provide this SSD signal on pin #11 (or pin #20 if high speed board jumper plugs SP1 and SP2 are on the "B" side) to prevent buffer over-run situations where several characters or lines of data can be lost. The signal can be negative (-) LOW or positive (+) HIGH when BUSY by setting serial board function switches 13 and 14. (See page B-8.) If your system does not use this signal, all data sent to the printer when it is busy will be lost.

Here are some common configurations for RS232-C cabling. Locate the proper pins on the computer side and you should have your printer and computer talking in no time.

DCE to DTE Cabling

(with H.S. Board jumper plugs SP1 and SP2 on side A)

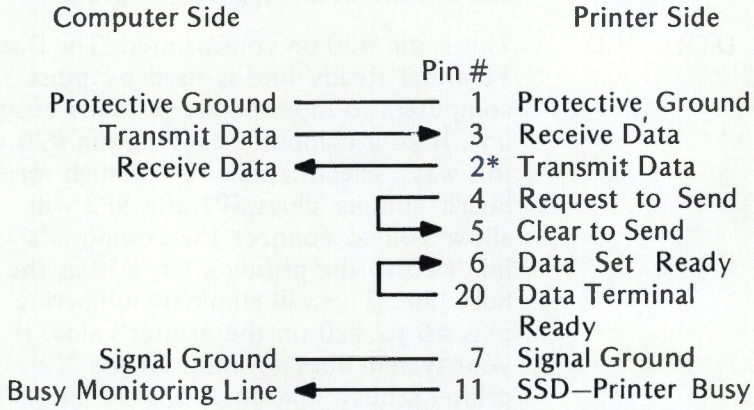

*connect only when using STX/ETX-ACK or X-ON/X-OFF protocol (ⓕ or ⓖ) and eliminate the connection to the Busy Monitoring Line.

DCE to DTE Cabling

(when H.S. Board jumper plugs SP1 and SP2 are on side B)

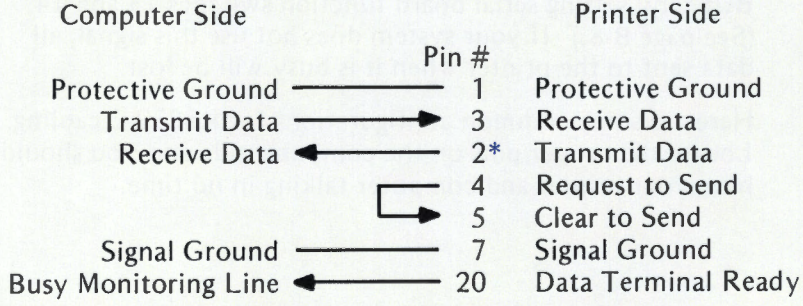

*connect only when using STX/ETX-ACK or X-ON/X-OFF protocol (ⓕ or ⓖ) and eliminate the connection to the Busy Monitoring Line.

DTE to DTE Cabling

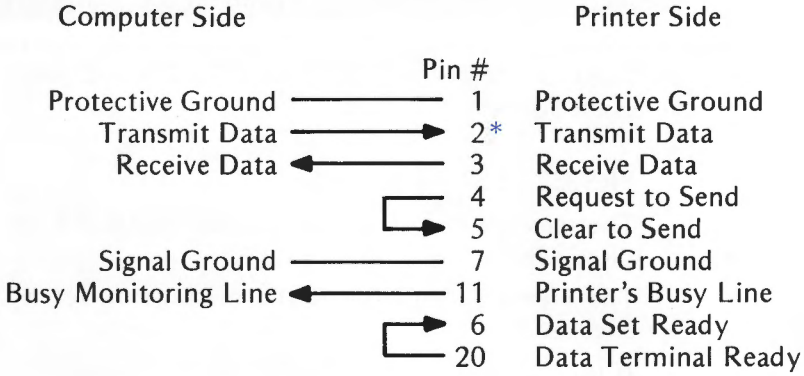

*connect only when using STX/ETX-ACK or X-ON/X-OFF protocol (1 or 2) and eliminate the connection to the Busy Monitoring Line.

RS232-C Local Test

After you've configured an interface cable for your computer and printer, you may want to spend a few extra minutes designing a test cable, shown below, to monitor the operation of the RS232-C interface. Once you've designed the cable, set the switches on the high speed board as shown and follow the instructions below:

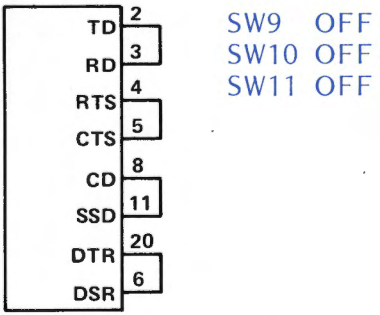

Figure C-1

1. Connect the test cable to the interface connector.
2. When the setting is completed, turn the power ON and the serial interface will check the memory function of

the printer's message buffer, the RS232-C interface and the receiver circuit, then it will print all the characters.

3. This test can be stopped by pushing the SEL button on the front of the printer OFF then ON. The test produces the following:

   "RS232 TEST" is printed

   The message buffer size is printed, "RAM256" or "RAM2K"

   The memory function of the message buffer is checked

   If the memory check is good, "OK" is printed

   If the memory check is faulty, "BAD" is printed

Three signals, DTR, RTS, and SSD and their corresponding pin connections are checked, if they are faulty, "I/F BAD" is printed.

Three more signals, CTS, DSR, and CD and their corresponding pin connections are checked, if they are faulty, "I/F BAD" is printed.

Hexadecimal characters, (20)H to (7F)H and (A0)H to (FF)H, are transmitted through the TD line and received through the RD line, then written to the message buffer. The characters above are then printed.

4. This pattern repeats until the switches are reset.

APPENDIX D — Interface Connections and Switch Settings for Popular Computers

The MICROLINE 92 and 93 printers have a built-in Centronics-compatible parallel interface, an optional high speed RS232-C interface and an optional super speed RS232-C interface. This appendix provides the switch settings and the cabling configurations required to connect the ML92 and 93 to some of the more popular computer systems on the market today.

In each application we will specify the type of cable to use (parallel or serial) and will show the required pin connections and switch settings. In some cases you can use switch selections other than the ones we've given, just check with your computer documentation for other alternatives to baud rates, protocols, etc.

For easy reference, we've listed the computer systems in alphabetical order.

NOTE: There are OKIDATA USERS TIPS available for several of the popular computers on the market today. These TIPS can assist you with using special software packages. See your dealer for details.

APPLE

Model II+ or IIe

Type of Interface Cable: Parallel

You need:
OKIDATA Apple Plug 'N Play Kit
or
Apple Parallel Printer Interface Card
Apple P/N A2B0002 with P1 PROM*

Special information: CHR$(9) will not perform a horizontal tab as described in the "Bells and Whistles" section of this manual. Instead, you must use this command:

```
POKE 49296,09
```

*The P1 PROM must be at position 4B. If you have the P9 PROM, see your dealer for an exchange since this PROM causes compressed printing when the printer's width is set wider than 40 columns.

APPENDIX D

Model III

Type of Interface Cable: Serial

You need:
OKIDATA High Speed RS232-C Serial Interface Board
or
OKIDATA Super Speed RS232-C Serial Interface Board

Switch Settings:

Operator's Panel	High Speed RS232-C		Super Speed RS232-C	
8 ON	1 ON	9 OFF	1 ON	9 ON
7 OFF	2 OFF	10 OFF	2 OFF	10 ON
6 OFF	3 ON	11 ON	3 OFF	11 OFF
5 OFF	4 OFF	12 ON	4 ON	12 ON
4 OFF	5 ON	13 OFF	5 OFF	13 OFF
3 OFF	6 OFF	14 OFF	6 ON	14 ON
2 OFF	7 ON	15 OFF	7 OFF	15 OFF
1 OFF	8 OFF	16 OFF	8 ON	16 OFF

Jumper Plugs on High Speed Board: SP1, SP2 and SP3 on A side

Serial Cable Configuration:

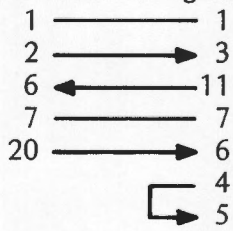

If you are using the Apple Parallel Card (PIC) P/N A2C0045 with the 25 pin "D" shell these are the pin connections:

Parallel Cable Configurations:

Pin	Signal	Printer Pin
2	Ground	19
5	Data Out 0	20
6	Data Out 1	3

Pin	Signal	Printer Pin
8	Data Out 2	4
11	Data Out 5	7
12	Data Out 6	8
13	Data Out 7	9
15	Strobe	1
16	Acknowledge	10
18	Data In 7	35
19	Data In 5	12
21	Data In 6	13
22	Data Out 3	5
23	Data Out 4	6
24	Ground	16
25	Data In 3	32

DIGITAL

Rainbow 100

Type of Interface: Serial

You need:
OKIDATA High Speed RS232-C Interface Board
or
OKIDATA Super Speed RS232-C Interface Board

Switch Settings:

Operator's Panel	High Speed RS232-C	
8 ON	1 OFF	9 ON
7 OFF	2 OFF	10 OFF
6 OFF	3 OFF	11 OFF
5 ON	4 OFF	12 OFF
4 OFF	5 ON	13 OFF
3 OFF	6 ON	14 OFF
2 OFF	7 ON	15 OFF
1 OFF	8 ON	16 ON

Super Speed RS232-C

1 OFF	9 ON
2 OFF	10 OFF
3 ON	11 ON
4 OFF	12 ON
5 OFF	13 OFF
6 ON	14 ON
7 OFF	15 OFF
8 ON	16 OFF

IBM Personal Computer

Type of Interface: Parallel

You need:
OKIDATA IBM Plug 'N Play Accessory Cable
or
IBM Parallel Printer Cable IBM P/N 1525612
or
IBM Parallel Printer Adapter and IBM Monochrome Display

Note: OKIDATA has an IBM Plug 'N Play Kit for the ML92 and ML93 to print graphics just like IBM's printer.

Switch Settings:

Operator's Panel

8 OFF
7 OFF
6 OFF
5 ON
4 OFF
3 OFF
2 OFF
1 OFF

Jumper plugs on the circuit board: SP1 side B
SP2 side A

Parallel Cable Configuration:

IBM Pin	Signal	Printer Pin
1	Strobe	1
2	Data 0	2
3	Data 1	3
4	Data 2	4
5	Data 3	5
6	Data 4	6
7	Data 5	7
8	Data 6	8
9	Data 7	9
10	Acknowledge	10
11	Busy	11
12	Paper End	12
13	Select	13
15	Fault	32
16	Initiate	31
18	Ground	34
19	Ground	19
20	Ground	21
21	Ground	23
22	Ground	25
23	Ground	27
24	Ground	29
25	Ground	30

APPENDIX D

OSBORNE

Model 1

Type of Interface: Parallel

You need:
Osborne IEEE Edge Connector

Parallel Cable Configuration:

Pin	Signal	Printer Pin	
1	Data 1	2	
2	Data 5	6	
3	Data 2	3	
4	Data 6	7	
5	Data 3	4	
6	Data 7	8	
7	Data 4	5	
8	Data 8	9	
10	Ground	30	
11	Strobe	1	
12	Ground	16	
15	Busy	11	
16	Ground	28	
18	Ground	21	
19	Select	13	
20	Ground	20	Also connect to shields

Type of Interface: Serial

Okidata High Speed Serial RS232-C Interface Board
or
Okidata Super Speed Serial RS232-C Interface Board

Switch Settings:

Operator's Panel	High Speed RS232-C		Super Speed RS232-C	
8 ON	1 OFF	9 OFF	1 OFF	9 ON
7 OFF	2 ON	10 OFF	2 ON	10 OFF
6 OFF	3 OFF	11 ON	3 ON	11 OFF
5 OFF	4 OFF	12 OFF	4 ON	12 ON
4 OFF	5 ON	13 OFF	5 OFF	13 OFF
3 OFF	6 OFF	14 OFF	6 ON	14 ON
2 OFF	7 ON	15 OFF	7 OFF	15 OFF
1 OFF	8 ON	16 ON	8 ON	16 OFF

Jumper plugs on the high speed board must be set as follows:

SP1 Side A
SP2 Side A
SP3 Side B

Serial Cable Configuration:

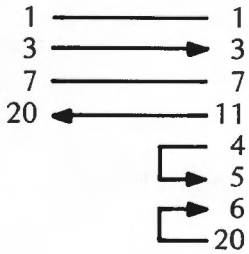

RADIO SHACK

Radio Shack connectors are normally not keyed and can accidentally be inserted upside down. Make sure all connectors are properly oriented before power on and that cable exits from the bottom of the connector on both ends.

TRS-80 Model 1

Type of Interface: Parallel

You need:
Radio Shack Cable P/N 26-1401 with expansion interface

Switch Settings:

Operator's Panel

8 OFF
7 OFF
6 ON
5 ON
4 ON
3 OFF
2 ON
1 OFF

Jumper plugs on the control circuit board must be set as follows:

SP1 Side A
SP2 Side A

Programmer's Note: CHR$(10) will not perform an additional line feed. Use either CHR$(32) or LPRINT "[SPACE]".

Model II

Type of Interface: Parallel

You need:
Radio Shack Cable P/N 26-4401

Switch Settings: Same as for Model I

Model III

Type of Interface: Parallel

You need:
Radio Shack Cable P/N 26-1401

Switch Settings: Same as for Model I

Jumper plug settings on circuit board are as follows:

SP1 Side A
SP2 Side A

APPENDIX E Dot Patterns

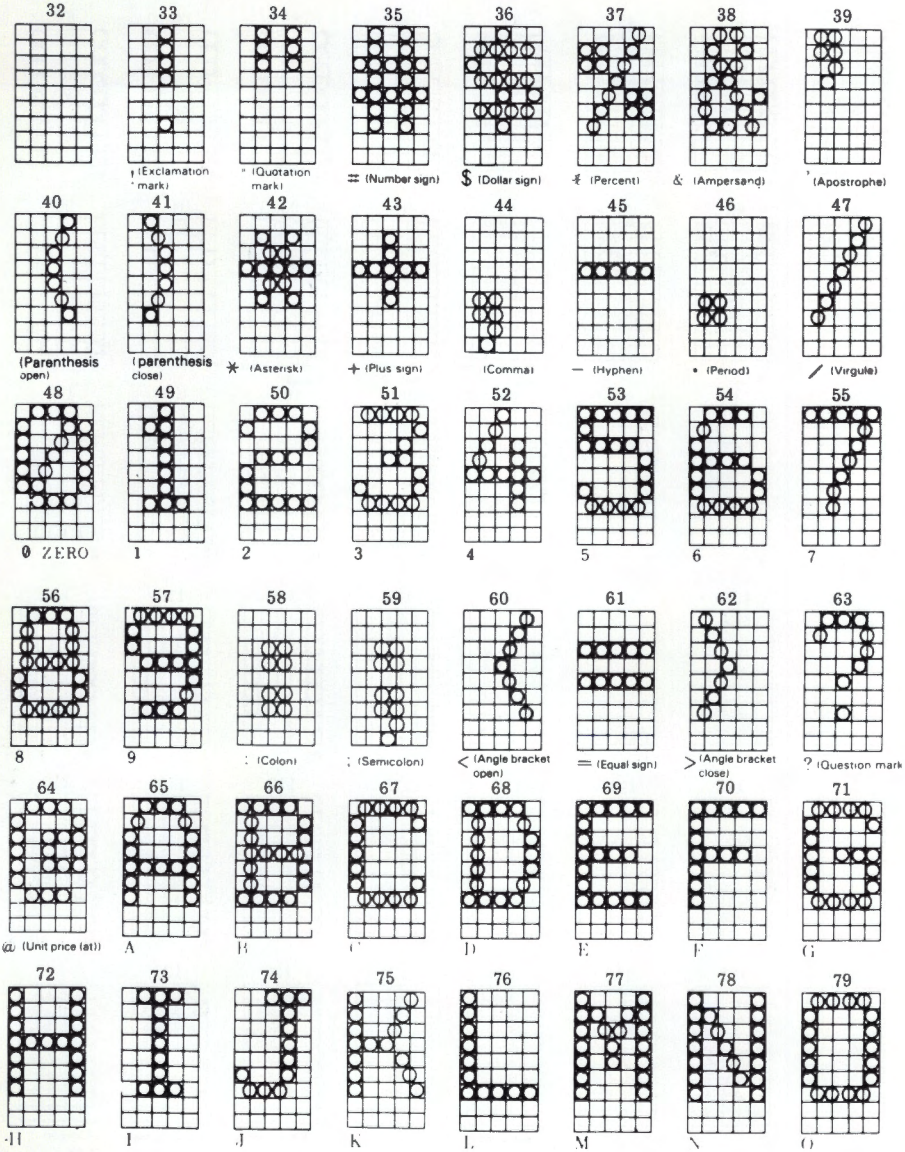

NOTE: Numbers given above are expressed in decimal.

APPENDIX E

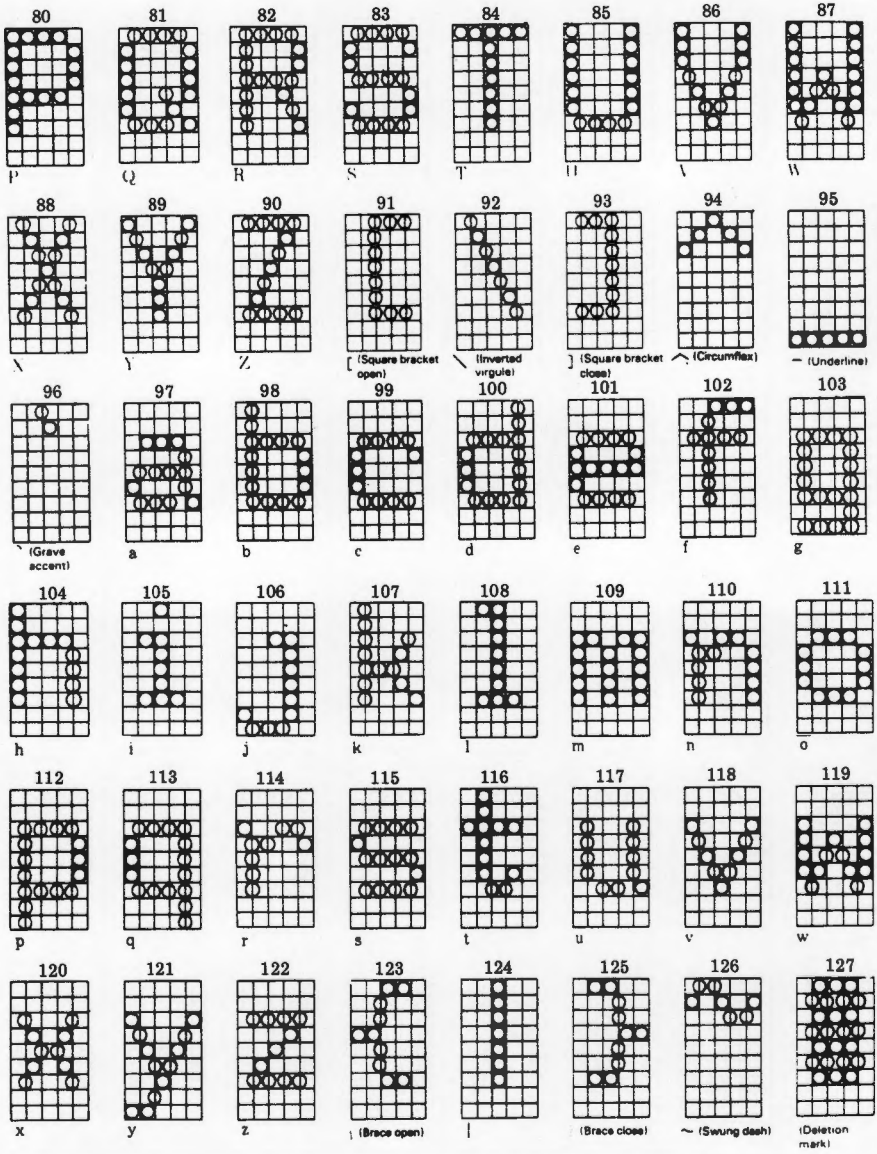

NOTE: The character code given at the top of each pattern is in decimal.

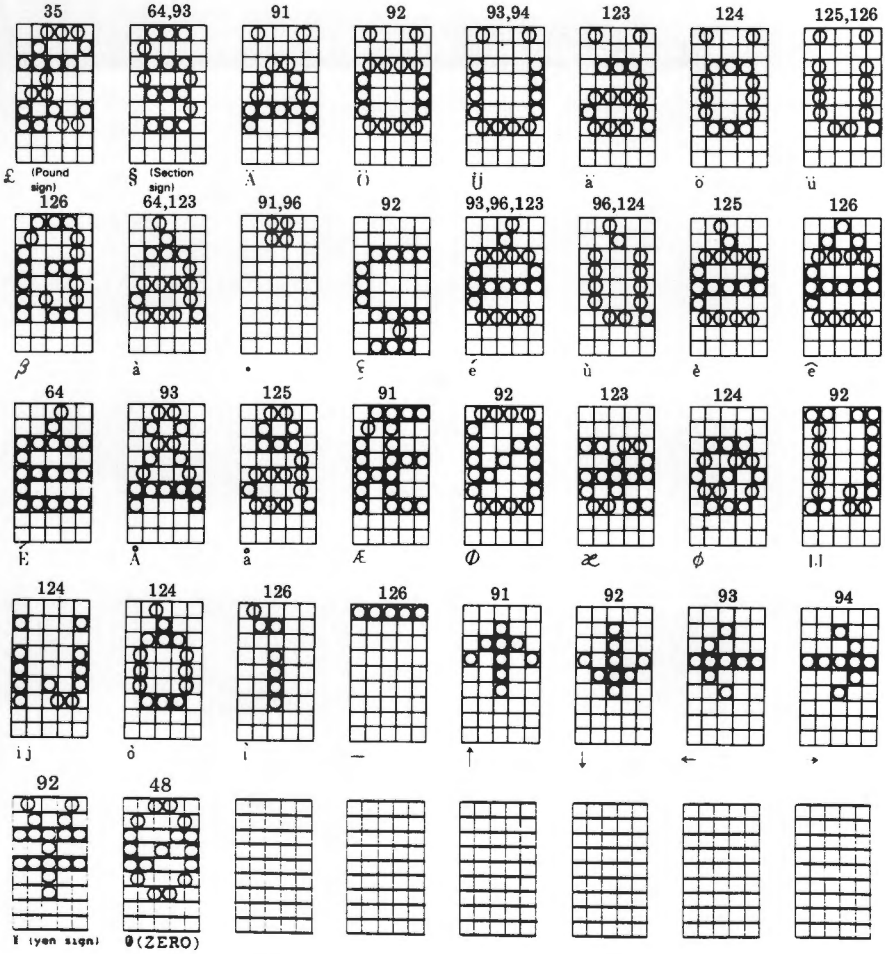

NOTE: The character code given at the top of each pattern is in decimal.

APPENDIX F ASCII Character Code Chart

This chart shows the ASCII character set and corresponding code numbers in decimal, hexadecimal and binary form.

Decimal	Binary	Hexa-decimal	ASCII Character
0	00000000	00	(NUL)
1	00000001	01	(SOH)
2	00000010	02	(STX)
3	00000011	03	(ETX)
4	00000100	04	(EOT)
5	00000101	05	(ENQ)
6	00000110	06	(ACK)
7	00000111	07	(BEL)
8	00001000	08	(BS)
9	00001001	09	(HT)
10	00001010	0A	(LF)
11	00001011	0B	(VT)
12	00001100	0C	(FF)
13	00001101	0D	(CR)
14	00001110	0E	(SO)
15	00001111	0F	(SI)
16	00010000	10	(DLE)
17	00010001	11	(DC1)
18	00010010	12	(DC2)
19	00010011	13	(DC3)
20	00010100	14	(DC4)
21	00010101	15	(NAK)
22	00010110	16	(SYN)
23	00010111	17	(ETB)
24	00011000	18	(CAN)
25	00011001	19	(EM)
26	00011010	1A	(SUB)
27	00011011	1B	(ESC)
28	00011100	1C	(FS)
29	00011101	1D	(GS)
30	00011110	1E	(RS)
31	00011111	1F	(US)
32	00100000	20	(SP)
33	00100001	21	!
34	00100010	22	"
35	00100011	23	#
36	00100100	24	$
37	00100101	25	%

Decimal	Binary	Hexa-decimal	ASCII Character
38	00100110	26	&
39	00100111	27	'
40	00101000	28	(
41	00101001	29	)
42	00101010	2A	*
43	00101011	2B	+
44	00101100	2C	,
45	00101101	2D	-
46	00101110	2E	.
47	00101111	2F	/
48	00110000	30	0
49	00110001	31	1
50	00110010	32	2
51	00110011	33	3
52	00110100	34	4
53	00110101	35	5
54	00110110	36	6
55	00110111	37	7
56	00111000	38	8
57	00111001	39	9
58	00111010	3A	:
59	00111011	3B	;
60	00111100	3C	<
61	00111101	3D	=
62	00111110	3E	>
63	00111111	3F	?
64	01000000	40	@
65	01000001	41	A
66	01000010	42	B
67	01000011	43	C
68	01000100	44	D
69	01000101	45	E
70	01000110	46	F
71	01000111	47	G
72	01001000	48	H
73	01001001	49	I
74	01001010	4A	J
75	01001011	4B	K

APPENDIX F

Decimal	Binary	Hexa-decimal	ASCII Character
76	01001100	4C	L
77	01001101	4D	M
78	01001110	4E	N
79	01001111	4F	O
80	01010000	50	P
81	01010001	51	Q
82	01010010	52	R
83	01010011	53	S
84	01010100	54	T
85	01010101	55	U
86	01010110	56	V
87	01010111	57	W
88	01011000	58	X
89	01011001	59	Y
90	01011010	5A	Z
91	01011011	5B	[
92	01011100	5C	\
93	01011101	5D	]
94	01011110	5E	^
95	01011111	5F	-
96	01100000	60	`
97	01100001	61	a
98	01100010	62	b
99	01100011	63	c
100	01100100	64	d
101	01100101	65	e
102	01100110	66	f
103	01100111	67	g
104	01101000	68	h
105	01101001	69	i
106	01101010	6A	j
107	01101011	6B	k
108	01101100	6C	l
109	01101101	6D	m
110	01101110	6E	n
111	01101111	6F	o
112	01110000	70	p
113	01110001	71	q
114	01110010	72	r
115	01110011	73	s
116	01110100	74	t

Decimal	Binary	Hexa-decimal	ASCII Character
117	01110101	75	u
118	01110110	76	v
119	01110111	77	w
120	01111000	78	x
121	01111001	79	y
122	01111010	7A	z
123	01111011	7B	{
124	01111100	7C	|
125	01111101	7D	}
126	01111110	7E	~
127	01111111	7F	(DEL)
128	10000000	80	
129	10000001	81	
130	10000010	82	
131	10000011	83	
132	10000100	84	
133	10000101	85	
134	10000110	86	
135	10000111	87	
136	10001000	88	
137	10001001	89	
138	10001010	8A	
139	10001011	8B	
140	10001100	8C	
141	10001101	8D	N/A
142	10001110	8E	
143	10001111	8F	
144	10010000	90	
145	10010001	91	
146	10010010	92	
147	10010011	93	
148	10010100	94	
149	10010101	95	
150	10010110	96	
151	10010111	97	
152	10011000	98	
153	10011001	99	
154	10011010	9A	
155	10011011	9B	
156	10011100	9C	
157	10011101	9D	

Decimal	Binary	Hexa-decimal	ASCII Character
158	10011110	9E	
159	10011111	9F	
160	10100000	A0	
161	10100001	A1	
162	10100010	A2	
163	10100011	A3	
164	10100100	A4	
165	10100101	A5	
166	10100110	A6	
167	10100111	A7	
168	10101000	A8	
169	10101001	A9	
170	10101010	AA	
171	10101011	AB	
172	10101100	AC	
173	10101101	AD	
174	10101110	AE	
175	10101111	AF	
176	10110000	B0	
177	10110001	B1	
178	10110010	B2	
179	10110011	B3	N/A
180	10110100	B4	
181	10110101	B5	
182	10110110	B6	
183	10110111	B7	
184	10111000	B8	
185	10111001	B9	
186	10111010	BA	
187	10111011	BB	
188	10111100	BC	
189	10111101	BD	
190	10111110	BE	
191	10111111	BF	
192	11000000	C0	
193	11000001	C1	
194	11000010	C2	
195	11000011	C3	
196	11000100	C4	
197	11000101	C5	
198	11000110	C6	

Decimal	Binary	Hexa-decimal	ASCII Character
199	11000111	C7	
200	11001000	C8	
201	11001001	C9	
202	11001010	CA	
203	11001011	CB	
204	11001100	CC	
205	11001101	CD	
206	11001110	CE	
207	11001111	CF	
208	11010000	D0	
209	11010001	D1	
210	11010010	D2	
211	11000011	D3	
212	11010100	D4	
213	11010101	D5	
214	11010110	D6	
215	11010111	D7	
216	11011000	D8	
217	11011001	D9	
218	11011010	DA	
219	11011011	DB	
220	11011100	DC	N/A
221	11011101	DD	
222	11011110	DE	
223	11011111	DF	
224	11100000	E0	
225	11100001	E1	
226	11100010	E2	
227	11100011	E3	
228	11100100	E4	
229	11100101	E5	
230	11100110	E6	
231	11100111	E7	
232	11101000	E8	
233	11101001	E9	
234	11101010	EA	
235	11101011	EB	
236	11101100	EC	
237	11101101	ED	
238	11101110	EE	
239	11101111	EF	

APPENDIX F

Decimal	Binary	Hexa-decimal	ASCII Character
240	11110000	F0	N/A
241	11110001	F1	
242	11110010	F2	
243	11110011	F3	
244	11110100	F4	
245	11110101	F5	
246	11110110	F6	
247	11110111	F7	

Decimal	Binary	Hexa-decimal	ASCII Character
248	11111000	F8	N/A
249	11111001	F9	
250	11111010	FA	
251	11111011	FB	
252	11111100	FC	
253	11111101	FD	
254	11111110	FE	
255	11111111	FF	

APPENDIX G — Control Code Quick Reference Chart

Control Code			Description
ASCII	Decimal	Hexa-decimal	
CARRIAGE RETURN CR	13	0D	See page 103 for explanation. Returns printhead to left side.
CHARACTER WIDTH RS FS GS US	 30 28 29 31	 1E 1C 1D 1F	See page 76 for explanation. Designates 10 CPI. Designates 12 CPI. Designates 17.1 CPI. Designates double-width characters.
CLEAR BUFFER CAN	24	18	Clears buffer; resets print modes (except for HT, VT, FF, and left margin set) to default state. See page 104 for explanation.
CORRESPONDENCE QUALITY MODE ESC-1	(27) (49)	(1B) (31)	Designates Correspondence Quality characters. See page 78.
Character Spacing ESC-N-00 to 11	(27) (78) (00) to (11)	(1B) (4E) (00) to (0B)	Designates space between characters in multiples of 1/120". Maximum space = 14/120". Default spacing is 3/120" at 10 cpi. ESN-N-0 returns to normal spacing. **NOTE:** Use only in Correspondence Quality mode. See page 80.
DATA PROCESSING ESC-0	(27) (48)	(1B) (30)	Designates Data Processing characters. (Automatically designated when printer is turned on.) See page 78.

APPENDIX G

Control Code			Description
ASCII	Decimal	Hexa-decimal	
DOWNLINE LOADABLE CHARACTER GENERATOR (DLCG)			See page 106 for explanation.
ESC-%-A C	(27) (37) (65) (32) to (127)	(1B) (25) (41) (20) to (7F)	Starts loading of one standard character into DLCG in ASCII code location C (32 to 127 decimal, 20 to 7F hexadecimal).
ESC-%-D C	(27) (37) (68) (32) to (127)	(1B) (25) (44) (20) to (7F)	Starts loading of one descender character into DLCG in ASCII code location C.
ESC-2	(27) (50)	(1B) (32)	Designates Downline Loadable Character Generator.
EMPHASIZED/ ENHANCED PRINTING			See page 84 for explanation.
ESC-H	(27) (72)	(1B) (48)	Designates half-dot enhanced printing.
ESC-T	(27) (84)	(1B) (54)	Designates half-dot emphasized printing.
ESC-I	(27) (73)	(1B) (49)	Stops emphasized or enhanced printing.
FORM			
Top of Form ESC-5	(27) (53)	(1B) (35)	Sets TOF (first line of printing). See page 87.
Form Feed FF	12	0C	See page 87. Feeds paper to first line of next form. (TOF = top of form)
Form Length ESC-F 00 to 99	(27) (70) (48) (48) to (57) (57)	(1B) (46) (30) (30) to (39) (39)	See page 87. Designates number of lines for page length. Example: 18 = (49) (56) decimal

Control Code			Description
ASCII	Decimal	Hexa-decimal	
GRAPHICS			See page 112.
ETX	(03)	(03)	Enter graphics mode. **NOTE:** Print density in graphics mode depends on character pitch. Before entering graphics mode, specify 10 cpi for 60 x 72 print density, or 12 cpi for 72 x 72 print density.
ETX-STX	(03) (02)	(03) (02)	Exit graphics mode.
ETX-SO	(03) (14)	(03) (0E)	Prints data in graphics mode, feeds paper 14/144", and returns carriage.
ETX-DC4	(03) (20)	(03) (14)	Prints data in graphics mode, and feeds paper 14/144" without carriage return.
ETX-LF	(03) (10)	(03) (0A)	Prints data in graphics mode, feeds paper one line, and returns carriage.
ETX-DC2	(03) (18)	(03) (12)	Prints data in graphics mode, and feeds paper one line without carriage return.
INDENTING			See page 101.
ESC-%-B n1-n2-n3-n4	(27) (37) (66) (n1) (n2) (n3) (n4)	(1B) (25) (3B) (H1) (H2) (H3) (H4)	Designates next print start position by dot column. n1 n2 n3 n4 indicates a 4-digit decimal number, the location of the dot column.
LEFT MARGIN			
ESC-%-C n1-n2-n3	(27) (37) (67) (n1) (n2) (n3)	(1B) (25) (3C) (H1) (H2) (H3)	Designates left margin by dot column. See page 94.
LINE FEED			See page 103.
LF	10	0A	Moves paper up one line.
ESC-DC2	(27) (18)	(1B) (12)	Prints data and feeds paper one line without carriage return.

Control Code			Description
ASCII	Decimal	Hexa-decimal	
LINE SKIP ESC-VT 00 - 99	(27) (11) (48) (48) to (57) (57)	(1B) (0B) (30) (30) to (39) (39)	See page 89. Directly skips the designated number of lines, (1st) (2nd) digits of number. Example: 30 = (51) (48) decimal
LINE SPACING ESC-6 ESC-8 ESC-%-9 n	 (27) (54) (27) (56) (27) (37) (57) (n)	 (1B) (36) (1B) (38) (1B) (25) (39) (H)	See page 82. Designates 6 LPI. Designates 8 LPI. Designates line spacing in multiples of 1/144", up to 127/144". Effective only in text mode, not in graphics mode.
PRINT SUPPRESS MODE DC3 DC1	 19 17	 13 11	See page 105. Print Suppress: printer ignores all data except DC1. The SEL lamp remains ON. Cancel Print Suppress.
SUPERSCRIPTS/ SUBSCRIPTS ESC-J ESC-K ESC-L ESC-M	 (27 (74) (27) (75) (27) (76) (27) (77)	 (1B) (4A) (1B) (4B) (1B) (4C) (1B) (4D)	See page 86. Prints characters that follow as superscripts or stops subscripts. Stops superscript printing. Prints characters that follow as subscripts or stops superscripts. Stops subscript printing.

Control Code			Description
ASCII	Decimal	Hexa-decimal	
TAB, HORIZONTAL			
Setting tab at character column			See page 96 for explanation.
ESC-HT-n1-n2-n3-CR	(27) (09) (n1) (n2) (n3) (13)	(1B) (09) (H1) (H2) (H3) (0D)	Sets horizontal tab stop at character column. **NOTE:** must be a 3-digit number.
Setting tab at dot column			See page 98 for explanation.
ESC-ETX-n1-n2-n3-n4-CR	(27) (03) (n1) (n2) (n3) (n4) (13)	(1B) (03) (H1) (H2) (H3) (H4) (0D)	Sets horizontal tab by dot column. **NOTE:** must be a 4-digit number.
Tab			
HT	09	09	Moves printhead to next pre-programmed horizontal tab position.
Clear Tab			
ESC-HT-CR	(27) (09) (13)	(1B) (09) (0D)	Clears horizontal tab.
UNDERLINING			See page 85 for explanation.
ESC-C	(27) (67)	(1B) (43)	Adds underline to characters that follow.
ESC-D	(27) (68)	(1B) (44)	Stops underlining.
VERTICAL FORMAT UNIT (VFU)			See page 90 for explanation.
DC4	20	14	Begin loading tab positions in VFU.
?	63	3F	End of VFU load sequence.
VT Channel No.	11 49 to 60	0B 31 to 3C	Feeds paper to tab position of selected channel number as pre-programmed in Vertical Format Unit (VFU).

APPENDIX H Specifications

These specifications apply to both ML92 and ML93 printers except where otherwise indicated.

Performance

Print Method	impact dot matrix
Printhead	9 pins
Print Speed	(in characters per second)
Data Processing mode	160 cps
Correspondence Quality mode	40 cps
Enhanced and Emphasized	80 cps
Print Technique	bi-directional, short-line seeking

Throughput @ 10 cpi	Microline 92	Microline 93
20 characters per line	180 lines/ minute	180 lpm
40 characters per line	139 lpm	139 lpm
80 characters per line	88 lpm	88 lpm
136 characters per line	—	57 lpm

Line Feed Speed (in milliseconds)	
6 lines/inch (lpi)	124 ms
8 lpi	103 ms

Printing Characteristics

Character Matrix (@ 10 cpi)	
Data Processing mode	9 x 9
Correspondence Quality mode	9 x 17

Characters per line	ML92	ML93
	80 @ 10 cpi	136 @ 10 cpi
	96 @ 12 cpi	163 @ 12 cpi
	136 @ 17.1 cpi	233 @ 17.1 cpi

Character sets			
	US ASCII	TRS-80	Swedish
	British	Danish	
	German	Italian	
	Norwegian	French	

Graphics

APA Graphics	60 x 72 dots per inch (dpi) 72 x 72 dpi

Media

Paper

Individual sheets: Standard paper up to 8.5" x 11" or 14"
Weight: 14-17 lbs.
Multipart paper cannot be used.

Roll paper: (Microline 92 only)
Max. roll diameter = 5.04"
Max. core diameter = 1"
Paper width = 8.2 to 8.5"
Weight: 14-17 lbs.
Multipart paper cannot be used.

Sprocket paper:

ML92	ML93
Sprocket paper 9.5" wide may be used with fixed-pin platen. If optional tractor unit is installed, 3 to 9.5" wide paper may be used.	Sprocket paper from 3" to 16" wide can be used.

Multipart paper

Type	Weight	No./Copies	Remarks
Carbon-lined paper	9 to 11 lbs.	up to 4 incl. original	up to 3 when fixed-pin (92) feed is used
Pressure-sensitive paper			
Interleaf paper	14 lbs.	up to 3 incl. original	
	9 lbs.	up to 4 incl. original	with tractor unit installed

Paper Thickness No more than 0.01 inch (0.28 mm) in thickness.

Paper path Rear or bottom

Ribbon

Special four mil, 1/2" wide on 2" spools

Interfaces

Parallel	Centronics compatible
Serial (factory option)	RS232-C to 9600 baud

Reliability

Mean Time Between Failures (MTBF)	4000 hours
Mean Time To Repair (MTTR)	15 minutes
Printhead Life	200 million characters

Power

Voltage	115 VAC ± 10%
Optional	220/240 VAC ± 10%
Frequency	50/60 Hz

Physical Dimensions

	ML92	ML93
Size	14.2" W x 12.9" D x 5.2" H	20.2" W x 12.9" D x 5.2" H
Weight	19.9 lbs.	30.8 lbs.

GLOSSARY

ASCII	American Standard Code for Information Interchange: A standard code which uses numbers to represent characters and control instructions. (See Appendix F.)
BASIC	Beginner's All-purpose Symbolic Instruction Code: One of the most popular general-purpose programming languages used with personal computers. Programming examples in this User's Manual are written in BASIC.
Baud	A measure of the speed at which data is transmitted. In personal computers, the baud rate is equivalent to bits per second. With serial interfaces, the printer must be set to receive data at the same baud rate at which the computer transmits it.
Bit	Binary digIT. Each bit is either 1 or 0.
Byte	A basic unit of information consisting of 8 bits. One byte can represent any ASCII character or any number between 0 and 256. (Note: Some computers handle data in 7-bit units.)
CPI	Characters Per Inch: A measure of the width of characters. Note that 10 CPI characters are wider than 17 CPI characters.
Firmware	Programming or information recorded in a permanent storage device, such as a ROM or PROM. Firmware is different from software because the user can't change it.
Hardware	The actual machinery and circuits in a computer system: keyboard, printed circuit board, printhead, etc.

Interface	The connection between two pieces of equipment – that is, between a computer and a printer. The two basic types of interfaces are parallel and serial. The word is loosely used to mean either the method of connection or the actual hardware used to connect equipment, including the circuits that control communication. As a verb, it usually means the act of making the connection.
Liveware	You, the user: generally acknowledged to be the most important component of any computer system.
LPI	Lines Per Inch: A measure of line spacing. When the line spacing is 6 LPI, the distance between the bottom of one line of print and the bottom of the next is 1/6".
Parallel Interface	An interface in which the 8 bits that make up each byte of data are transmitted simultaneously over 8 separate wires.
Parity	A method of checking for errors in data transmission used in some serial interfaces. The computer adds a bit – called the "parity bit" – to each byte of data so that the total number of 1's is either always even ("even parity") or always odd ("odd parity"). The printer checks each incoming byte plus parity bit to make sure the parity is correct; if it isn't, that indicates that the data hasn't been sent (or received) properly, and the printer signals that a "parity error" has been detected.

PROM — Programmable Read-Only Memory: ROM that can be programmed, but only with special equipment, so for most people PROM and ROM are the same. Some MICROLINE options, such as the IBM PLUG 'N PLAY Kit, consist of a set of PROMs to replace those in the standard printer; the new PROMs tell the printer to interpret control codes differently.

Protocol — A set of rules controlling serial communication between the computer and the printer. Using signals defined by a protocol, the printer can acknowledge that it has received data or tell the computer to stop sending data until more storage space in the printer is available. Protocols also set the format for data transmission.

RAM — Random Access Memory: A temporary memory device (integrated circuit chip). In MICROLINE printers, RAM is used for temporary storage of data before printing (this type of RAM is called a "buffer") and for storage of commands to change printing features, VFU formats, and Downline Loaded character sets. NOTE: This type of memory is "volatile" – that is, it is erased when the printer is turned off.

ROM — Read-Only Memory: A permanent storage device (integrated circuit chip). Information stored in ROM – called "firmware" – can be "read" but cannot be added to or changed. In MICROLINE printers, ROM is used to store the dot patterns that make up the character sets, instructions for interpreting control codes, etc.

RS232-C — A uniform standard for serial interfaces set by the Electronic Industries Association (EIA). It establishes standards for signals and cabling. Most personal computers follow this standard for serial interfaces with some variations.

Serial Interface — An interface in which the 8 bits that make up each byte of data are transmitted one after the other over one wire.

Software — A program, or set of instructions, that tells your computer or printer what to do. It's called "soft" because, like words, it doesn't really have a physical form the way something like a rock does. A "software package" is a commercially prepared program or set of programs, usually sold recorded on a disk or tape cassette.

INDEX

Apple Computer, 67, 106; interface, D-1 - D-3
ASCII Chart, F-1 - F-4

Basic Programming, 67-74

Cabling (See Interface)
Cancel (CAN), 104
Carriage Return (CR), 30, 103
Character set table, 29,
Character Sizes, 76-77;
    Condensed, 76-77;
    Double Width 76-77;
    Elite, 76-77, 95;
    Pica, 76-77, 95
Character Spacing, 80-81
Characters, maximum number per line, 77
Commodore, 68
Control Codes, G-1 — G-5
Correspondence Quality, 71, 78-79

Data Processing, 78-79
Delete Code (DEL), 26, 30, 69
Digital Computer, D-3; interface, D-3 - D-4
Direct Line Skip, 89
Dot column width, 101
Dot columns, maximum per line, 96
Dot patterns, E-1 — E-3
Downline Loadable Character Generator (DLCG), 106-111;
    ascenders and descenders, 109-110;
    converting dot patterns, 107-108;
    designing, 106-107;
    loading, 109-111

Emphasized printing, 84
Enhanced printing, 84

Form Feed (FF), 87-88; FORM FEED button, 58, 59
Form length:
    Form Length dial, 58, 60-61;
    programmable setting, 87-88
Front operating panel, 58

Graphics (APA), 112-119;
multiline, 117-119;
programming, 112-115;
resolution, 115-117

Head Gap Adjusting Lever, 56
Horizontal Tabs, 96-100

IBM Personal Computer, 66, D-4 – D-5
Interface, 30;
Parallel, 33;
making a cable, A-1;
signals, A-2 – A-3;
Serial, 35;
baud rate table, B-3;
function switch table, B-11 – B-12;
jumper plugs, B-8 – B-9;
local test, C-5 – C-6;
making a cable, C-1, C-4 – C-5;
protocols, B-3 – B-8;
signals, C-2 – C-3
Indenting, 101-102
I-Prime, 66

Jumper Plugs, 31-33

Line feed (LF), 30, 103
LINE FEED button, 58-60
Line Spacing, 82-83

Margin, left, setting of, 94-95

Non-Printable Codes, 69
Notation, 75

Osborne, Computer D-6 – D-7

Page length (See Form Length)
Paper, loading:
individual sheets, 17-21, 41;
roll paper, 43-45;
sprocket paper, 46-55
Paper Release Lever, 56
Platen Knob, 6, 9, 56
Print suppress, 31, 105

Printer:
closing of, 33;
opening of, 27
Printhead gap, 56

Ribbon:
installing of, 14;
replacing of, 14
Roll paper stand, 6, 43-44
RS232-C (See Interface, serial)

SEL button, 58, 105
Self test, 21-22
Shorting Plugs (See Jumper Plugs)
Specifications, H-1 – H-3
Subscripts, 86
Superscripts, 86
Switches, function:
accessing of, 27;
on control circuit board, 26, 37/38;
table of, 37/38;
on serial board, B-1;
table of, B-11 – B-12

Tabs, horizontal, 96-100;
clearing of, 100;
setting of:
character column tabs, 96-97;
dot column tabs, 98-99
TOF SET button, 58, 59
Top of Form, 58, 59, 87-88
Tractor feed unit, 6, 46-48, 50-55
TRS-80 (Radio Shack), 71, 87;
interface, D-8 – D-9
Troubleshooting, 121

Underlining, 85

Vertical Format Unit (VFU), 90
Vertical Formatting, 90-93
Voltage selection switch, 9, 11

Federal Communications Commission
Radio Frequency Interference Statement

WARNING: This equipment complies with the limits for a Class B computing device in accordance with the specifications in Subpart J of Part 15 of FCC Rules. These specifications are designed to minimize radio frequency interference in a residential installation; however, there is no guarantee that radio or television interference will not occur in any particular installation. If this equipment does cause interference to radio or television reception, which can be determined by turning the equipment off and on when the radio or television is on, the user is encouraged to try to correct the interference by one or more of the following measures:

- Reorient the radio or television receiving antenna.
- Relocate the printer with respect to the receiver.
- Move the printer away from the receiver.
- Plug the printer into a different outlet so that printer and receiver are on different branch circuits.

If necessary, the user should consult the dealer or an experienced radio/television technician for additional suggestions. The user may find the following booklet prepared by the Federal Communications Commission helpful:

"How to Identify and Resolve Radio-TV Interference Problems"

This booklet is available from the U.S. Government Printing Office, Washington, DC 20402 by ordering Stock No. 004-000-00345-4.

Reordering numbers:

59207900-A — manual only
59208200-A — manual with binder

PRINTER SERVICE CONTRACTS AVAILABLE FROM OKIDATA

Extended Warranty

This extends the warranty period to one full year from date of purchase. You must purchase this extension from your dealer within ten days of the date you buy your printer.

Depot Service Contract

This renewable contract covers parts and labor costs for repairs at one of our Service Centers for one full year. Check the box on the Warranty Card to receive details on cost and terms.

On-Site Service Contract

This renewable contract covers all costs of repair at your location for one full year. Terms can be tailored to your specific needs. Check the box on the Warranty Card to receive full details.

LIMITED WARRANTY

Okidata Corporation ("Okidata") warrants this Microline *printer* and *printhead* to be free from defect in material and workmanship and will remedy any such defect according to the terms of this *Limited Warranty*. This *Limited Warranty* does not extend to consumable items, including but not limited to ribbons, fuses, and etc.

Okidata will repair (or at its option, replace) at no charge any defective component(s) of the Microline *printer* for ninety (90) days from date of purchase and will replace any defective printhead for one year from the date of printer purchase.

To make request or claim for service under this *Limited Warranty*, the original purchaser must return the Okidata product, shipping prepaid, in the original shipping container or equivalent, to Okidata or an authorized Okidata repair center and assume the risk of loss or damage in transit. A written receipt for the product, showing the date of purchase, dealer's name, and both the model and serial numbers of the Okidata printer, must accompany *any* request or claim for work to be performed under this *Limited Warranty*.

This *Limited Warranty* shall not apply if the product has been damaged due to abuse, misuse, misapplication, accident, or as a result of service or modification by any other than an authorized Okidata repair center.

THERE ARE NO EXPRESS WARRANTIES OTHER THAN THOSE ON THE FACE HEREOF AND DESCRIBED ABOVE. NO WARRANTIES WHETHER EXPRESS OR IMPLIED, INCLUDING BUT NOT LIMITED TO, ANY IMPLIED WARRANTIES OF MERCHANTABILITY OR FITNESS FOR A PARTICULAR PURPOSED SHALL EXTEND BEYOND THE RESPECTIVE WARRANTY PERIODS DESCRIBED ABOVE OF NINETY DAYS (FOR THE MICROLINE *PRINTER* OR ONE (1) YEAR (FOR THE *PRINTHEAD* ONLY). Some states do not allow limitations on how long an implied warranty lasts, so the above limitation may not apply to you.

OKIDATA SHALL NOT BE RESPONSIBLE OR LIABLE FOR ANY SPECIAL, INCIDENTAL OR CONSEQUENTIAL DAMAGES OR LOSS ARISING FROM THE USE OF THIS PRODUCT. Some states do not allow the exclusion or limitation of incidental or consequential damages, so the above exclusion may not apply to you.

This *Limited Warranty* applies to Okidata printers sold in the continental United States. Additional information on obtaining service under this *Limited Warranty* is available by contacting the Okidata dealer from whom the product was purchased, or by contacting Okidata directly at the address provided below.

Okidata Corporation
111 Gaither Drive
Mt. Laurel, NJ 08054
ATTN: Field Service Department
609-235-2600

The warranty for Microline printers purchased outside of the continental United States may vary. Contact your Okidata distributor for warranty service information.

This warranty gives you specific legal rights, and you may also have other rights which vary from state to state.

Detach Here

OKIDATA AUTHORIZED SERVICE CENTERS

Xerox Service Centers, authorized repair centers for OKIDATA printers, are located in these areas:

Phoenix, AZ	602-967-1922	Boston, MA	617-848-5750
Los Angeles, CA	213-289-0175	Detroit, MI	313-583-2935
Anaheim, CA	714-776-8143	Minneapolis, MN	612-920-4472
Denver, CO	303-696-8966	Whippany, NJ	201-428-0275
Washington, DC	301-459-3973	Charlotte, NC	704-399-1523
Miami, FL	305-887-2711	Long Island, NY	516-437-1134
Orlando, FL	305-830-8109	Manhattan, NY	212-697-2190
Atlanta, GA	404-458-1016	Pittsburgh, PA	412-921-8202
Chicago, IL	312-437-3180	Dallas, TX	214-630-6647
	312-559-9440	Houston, TX	713-862-1784
Kansas City, KS	913-381-9819		713-789-3070
		Seattle, WA	206-251-9155

OKIDATA
Regional Headquarters:

Mt. Laurel, NJ
609-235-2600

Santa Clara, CA
408-496-0811

We are constantly expanding our support network to provide better service to our customers. For the latest information on our service locations call our regional headquarters. Our toll-free number is:

1-800-OKIDATA

Many independent dealers and distributors are factory trained to service your OKIDATA printer – they can give you fast, personal service. Contact our regional headquarters for the name of the Certified dealer nearest you.

Model Microline _____

Date _____

Serial # _____

Optional Equipment _____

_____

Dealer _____

_____

City _____ State _____

Phone Number ( ) _____

Date Purchased _____

OKIDATA
SERVICE CENTERS

Regional Offices

West	East
3300 Keller St. Santa Clara, CA 95050	Mt. Laurel, NJ 08054
(408) 496-0811	(609) 235-2600

1. Fill in the information card on your left and have it available when you need to call Okidata Service Centers for repair or assistance. The Service Centers can handle your questions and problems more promptly with this information about your printer.
2. The date and serial number are located on a plate on the bottom left (looking from rear) of the printer.
3. If you purchased any separate options, such as a Cut Sheet Feeder, note them under the "Optional Equipment" category.
4. Fill in your dealer's name, address, and phone number. Contact him first if you have a problem — he can help you promptly.