SONY®

DIGITAL VIDEOCASSETTE RECORDER

DVW-A500P
DVW-500P
DVW-A500P/1
DVW-500P/1

ANALOG COMPOSITE DECODER BOARD
BKDW-506

AUDIO PROGRAM PLAY BOARD
BKDW-507

PARALLEL (50P) INTERFACE KIT
BKDW-509

CONTROL PANEL EXTENSION KIT
BKDW-510

CONTROL PANEL CASE
BKDW-511

CONTROL PANEL
BKDW-514

CONTROL PANEL
BKDW-515

Digital BETACAM™

MAINTENANCE MANUAL Part1
1st Edition (Revised 11)

⚠警 告

このマニュアルは，サービス専用です。
お客様が，このマニュアルに記載された設置や保守，点検，修理などを行うと感電や火災，人身事故につながることがあります。
危険をさけるため，サービストレーニングを受けた技術者のみご使用ください。

⚠ WARNING

This manual is intended for qualified service personnel only.
To reduce the risk of electric shock, fire or injury, do not perform any servicing other than that contained in the operating instructions unless you are qualified to do so. Refer all servicing to qualified service personnel.

⚠ WARNUNG

Die Anleitung ist nur für qualifiziertes Fachpersonal bestimmt.
Alle Wartungsarbeiten dürfen nur von qualifiziertem Fachpersonal ausgeführt werden. Um die Gefahr eines elektrischen Schlages, Feuergefahr und Verletzungen zu vermeiden, sind bei Wartungsarbeiten strikt die Angaben in der Anleitung zu befolgen. Andere als die angegeben Wartungsarbeiten dürfen nur von Personen ausgeführt werden, die eine spezielle Befähigung dazu besitzen.

⚠ AVERTISSEMENT

Ce manual est destiné uniquement aux personnes compétentes en charge de l'entretien. Afin de réduire les risques de décharge électrique, d'incendie ou de blessure n'effectuer que les réparations indiquées dans le mode d'emploi à moins d'être qualifié pour en effectuer d'autres. Pour toute réparation faire appel à une personne compétente uniquement.

DVW-A500P	Serial No. 10001 and Higher
DVW-500P	Serial No. 10001 and Higher
DVW-A500P/1	Serial No. 50001 and Higher
DVW-500P/1	Serial No. 50001 and Higher
BKDW-506	Serial No. 10001 and Higher
BKDW-507	Serial No. 10001 and Higher
BKDW-509	Serial No. 10001 and Higher
BKDW-510	
BKDW-511	
BKDW-514	Serial No. 10001 and Higher
BKDW-515	Serial No. 10001 and Higher

TABLE OF CONTENTS

1. SERVICE OVERVIEW

1-1. NOTES ON POWER SUPPLY BLOCK 1-1
1-1-1. Warning on Primary Circuit and Electric Shock 1-1
1-1-2. Notes on Resetting the Circuit Breaker 1-1
1-2. REMOVAL/INSTALLATION OF CABINET 1-1
1-2-1. Cabinet Removal/Installation 1-1
1-2-2. Cassette Compartment Removal/Installation .. 1-2
1-2-3. Connector Panel Removal/Installation 1-2
1-2-4. Power Supply Panel Removal/Installation 1-3
1-3. REMOVAL/INSTALLATION OF PLATE MD 1-4
1-4. FUNCTIONS OF PRINTED CIRCUIT BOARD 1-5
1-5. LOCATIONS OF MAIN PART 1-6
1-5-1. Printed Circuit Board Locations 1-6
1-5-2. Main Mechanical Part Locations 1-8
1-5-3. Function and Location of Sensors 1-9
1-6. LED INDICATOR INFORMATION ON BOARDS 1-10
1-7. MECHANISM OF CASSETTE 1-12
1-8. HOW TO PULL OUT/PUSH IN LOWER CONTROL PANEL 1-13
1-9. REMOVAL/INSTALLATION OF LOWER CONTROL PANEL ASSEMBLY 1-13
1-10. HOW TO TAKE OUT THE CASSETTE WHEN THE TAPE IS SLACKING 1-15
1-11. CLEANING WHEN THE HEADS ARE CLOGGED 1-16
1-11-1. Cleaning by Cleaning Tape 1-16
1-11-2. Cleaning by Cleaning Cloth 1-16
1-12. HOW TO START THE FUNCTIONS EXPANDED BY THE SETUP MENU SETTING 1-17
1-12-1. How to Start the Internal Video SG 1-17
1-12-2. How to Start the Internal Audio SG 1-17
1-12-3. How to Start the System E-E Mode 1-17
1-13. FIXTURE AND MEASURING EQUIPMENT FOR ADJUSTMENT 1-18
1-13-1. Fixture 1-18
1-13-2. Measuring Equipment 1-20
1-14. ERROR LOGGER FUNCTION 1-20
1-15. SAFETY CHECK-OUT 1-21

2. RECORDING FORMAT, HEAD CONFIGURATION, AND SIGNAL PROCESSING

2-1. OUTLINE 2-1
2-2. RECORDING FORMAT 2-2
2-2-1. Tape Pattern 2-2
2-2-2. Data Arrangement on Program Tracks 2-3
2-2-3. Longitudinal Tracks 2-4
2-3. HEAD CONFIGURATION 2-5
2-4. SIGNAL PROCESSING 2-6
2-4-1. Outline of the Digital Interface Format 2-6
2-4-2. Outline of the Digital Signal Processing 2-8
2-4-3. Error Correction Coding 2-9

3. BLOCK DIAGRAMS AND CIRCUIT DESCRIPTIONS

3-1. OVERALL 3-2
OVERALL (1/2) 3-2
OVERALL (2/2) 3-4
3-2. CIRCUIT BLOCK 3-6
VPR-1 3-6
APR-1 3-11
DIF-16 3-15
DPR-36 3-19
EQ-45 3-23
CUE-1 3-26
DM-89 3-30
TBC-24 3-37
TBC-23 3-41
AP-28 3-47
SS-52 (1/3) 3-51
SS-52 (2/3) 3-55
SS-52 (3/3) 3-59
DR-307/200 3-63
FUNCTION CONTROL 3-66
POWER SUPPLY 3-68
DEC-65 3-71
3-3. FRAME 3-76
FRAME WIRING (1/3) 3-76
FRAME WIRING (2/3) 3-78
FRAME WIRING (3/3) 3-80

4. ERROR MESSAGES AND TROUBLESHOOTING

4-1. ERROR MESSAGE 4-1

5. MAINTENANCE MODE

5-1. OUTLINE 5-1
5-2. SERVO/DT SYSTEM CHECK MODE 5-5
5-2-1. Servo System Check 1 5-6
5-2-2. Servo System Check 2 5-10
5-2-3. Servo System Check 3 5-16
5-2-4. Servo System Check 4 5-20
5-2-5. Servo System Check 5 5-22
5-2-6. Digital DT System Check 5-25
5-2-7. Analog DT System Check (For DVW-A500P/A500) 5-28
5-3. RF SYSTEM CHECK MODE 5-30
5-4. AUDIO/VIDEO SYSTEM CHECK MODE 5-32
5-5. BETACAM PB SYSTEM CHECK MODE (For DVW-A500P/A500) 5-34
5-6. OTHERS CHECK MODE 5-36
5-7. SERVO/DT SYSTEM ADJUSTMENT MODE 5-41
5-7-1. Servo System Adjustment Mode 5-42
5-7-2. Digital DT System Adjustment Mode 5-53
5-7-3. Analog DT System Adjustment Mode (For DVW-A500P/A500) 5-61
5-8. RF SYSTEM ADJUSTMENT MODE 5-66
5-9. AUDIO/VIDEO SYSTEM ADJUSTMENT MODE 5-76
5-10. BETACAM PB SYSTEM ADJUSTMENT MODE (For DVW-A500P/A500) 5-80

6. REPLACEMENT OF POWER BLOCK AND CIRCUIT BOARDS

6-1. GENERAL INFORMATION FOR POWER/ BOARDS REPLACEMENT 6-1
6-1-1. Index for Board Replacement 6-1
6-1-2. Plug-in Board Pulling Out/Inserting 6-2
6-1-3. Flexible Card Wire Replacement 6-4
6-2. POWER BLOCK/BOARD REPLACEMENT 6-5
6-3. HOW TO REPLACE BOARDS 6-8
6-3-1. SWC-17 Board 6-8
6-3-2. FP-58 Board 6-11
6-3-3. VR-152 Board 6-13
6-3-4. VR-153 Board 6-18
6-3-5. KY-231 Board 6-20
6-3-6. DP-176 Board 6-21
6-3-7. SWC-18 Board 6-22
6-3-8. SWC-19 Board 6-24
6-3-9. CP-218 Board 6-26
6-3-10. CP-220 Board 6-28
6-3-11. DR-307/200 Board 6-29
6-3-12. DT-34 Board 6-31
6-3-13. HN-181 Board 6-32
6-3-14. HN-184 Board 6-38
6-3-15. HN-185 Board 6-41
6-4. ADJUSTMENT AND CHECK AFTER DIGITAL BOARD REPLACEMENT 6-45
6-4-1. VPR-1 Board 6-45
6-4-2. APR-1 Board 6-56
6-5. ADJUSTMENT AFTER TBC-23 BOARD REPLACEMENT 6-61

7. PERIODIC MAINTENANCE AND INSPECTION

7-1. CLEANING 7-1
7-1-1. General Information for Cleaning 7-1
7-1-2. Rotary Heads Cleaning 7-3
7-1-3. Upper Drum's Tape Running Surface Cleaning 7-4
7-1-4. Lower Drum's Tape Running Surface and Lead Surface Cleaning 7-5
7-1-5. Stationary Heads Cleaning 7-6
7-1-6. Tape Running System and Tape Cleaner Cleaning 7-7
7-1-7. Fan Motor Cleaning 7-8
7-1-8. Cassette Compartment Cleaning 7-9
7-2. PERIODIC CHECK 7-10
7-2-1. Hours Meter 7-10
7-2-2. Periodic Check List 7-11

8. REPLACEMENT OF PERIODIC MAINTENANCE PARTS

8-1. GENERAL INFORMATION FOR PARTS REPLACEMENT AND ADJUSTMENT 8-1
8-1-1. Basic Knowledge 8-1
8-1-2. Threading End Mode and Unthreading End Mode 8-2
8-1-3. L Cassette Position and S Cassette Position 8-4
8-2. PARTS REPLACEMENT 8-7
8-2-1. Inner Drum Assembly Replacement 8-10
8-2-2. Brush/Slip Ring Assembly Replacement 8-24
8-2-3. Drum Assembly Replacement 8-26
8-2-4. Cleaning Roller and Rotary Head Cleaner Assembly Replacement 8-32
8-2-5. AT Head Cleaner Replacement 8-34
8-2-7. Pinch Roller Replacement 8-38
8-2-8. Audio/TC Head Replacement 8-40
8-2-9. CTL Head Replacement 8-44
8-2-10. Capstan Motor Replacement 8-48
8-2-11. Pinch Solenoid Replacement 8-52
8-2-12. Brake Lining Replacement 8-58
8-2-13. Reel Motor Assembly Replacement 8-60
8-2-14. Fan Motor Replacement 8-69
8-2-15. Filter Replacement 8-70
8-3. MECHANICAL ADJUSTMENT 8-71
8-3-1. Pinch Press Clearance Adjustment 8-73
8-3-2. Reel Motor Shaft Slantness Adjustment 8-75
8-3-3. Cassette Pillar Height Adjustment (L Cassette) ..... 8-77(b)
8-3-3. Cassette Pillar Height Adjustment (S Cassette) ..... 8-77(a)
8-3-4. Reel Table Height Adjustment 8-79
8-3-5. Reel Brake Clearance Check 8-83
8-3-6. Reel Brake Release Amount Adjustment 8-85
8-4. TAPE PATH ADJUSTMENT 8-87
8-4-1. Audio/TC Head Zenith Adjustment 8-91
8-4-2. Tape Running Adjustment 8-93
8-4-3. Video Tracking Adjustment 8-97
8-4-4. CTL Head Height Adjustment 8-107
8-4-5. CTL Head Position Adjustment 8-109
8-4-6. Audio/TC Head Height Adjustment 8-113
8-4-7. Audio/TC Head Azimuth Adjustment 8-119
8-4-8. Audio/TC Head Head-to-tape Contact Adjustment 8-123
8-4-9. Audio/TC Head Position Adjustment 8-129
8-4-10. Audio Level Adjustment in REV Mode 8-131
8-5. SERVO/DT AND RF ADJUSTMENT 8-137
8-5-1. Drum Phase Adjustment 8-141
8-5-2. Digital DT Adjustment 8-142
8-5-3. Analog DT Adjustment (For DVW-A500P/A510P/CA510P) 8-143
8-5-4. SAT Check (For DVW-A500P/500P) 8-144
8-5-5. Head Height Check 8-145
8-5-6. ADV Envelope Level Adjustment 8-146
8-5-7. CNF Envelope Level Adjustment 8-147
8-5-8. Playback Equalizer Adjustment 8-148
8-5-9. Recording Current Adjustment 8-149
8-6. ADJUSTMENT AFTER DRUM REPLACEMENT (For DVW-A500P/A510P/CA510P) 8-151
8-6-1. EQ RF Output Level Adjustment 8-157
8-6-2 (1). DM OMC Limiter Balance Adjustment 8-161
8-6-2 (2). DM OMC Limiter Balance Adjustment (without Spectrum Analyzer) 8-164
8-6-3. Demodulator Limiter Balance Adjustment 8-165
8-6-4. PB Frequency Response Adjustment 8-167
8-6-5. DM RF Output Level Adjustment (For BOARD'S No. suffix 11, 12) 8-169
8-6-6. DM RF Envelope Check 8-172
8-6-7. TBC Y/C Delay Check 8-173
8-6-8. Y and C Error Offset Check 8-175
8-6-9. AFM RF Level Adjustment 8-176

8-7. ADJUSTMENT AFTER AUDIO/
TC HEAD REPLACEMENT 8-177
8-7-1. Audio PB Frequency Response Adjustment
(Oxide) (For DVW-A500P) 8-184
8-7-2. Audio PB Frequency Response Adjustment
(Metal) (For DVW-A500P) 8-185
8-7-3. AP Board Dolby Level Adjustment
(For DVW-A500P) 8-186
8-7-4. LAU PB Level Adjustment
(For DVW-A500P) 8-186
8-7-5. LAU PB Phase Adjustment
(For DVW-A500P) 8-187
8-7-6. Cue PB Frequency Response Adjustment ... 8-188
8-7-7. Cue PB Level Adjustment 8-189
8-7-8. Channel Erase Current Check 8-190
8-7-9. Bias Tune and Bias Trap Adjustment 8-191
8-7-10. Bias Current Adjustment 8-191
8-7-11. Cue OA Level Rough Check 8-192
8-7-12. Cue OA Frequency Response Check 8-193
8-7-13. Cue OA Level Check 8-194
8-7-14. Cue OA Level Distortion Check 8-194
8-7-15. LTC PB Level Check 8-195
8-7-16. LTC OA Check 8-196
8-7-17. TC Insert Crosstalk Adjustment 8-197
8-7-18. Cue Erasure Ratio Check 8-198

9. SPARE PARTS

9-1. NOTES ON SPARE PARTS 9-1
9-2. SPARE PARTS LIST – VTR – 9-2
9-2-1. Index 9-2
9-2-2. Exploded Views and Mechanical Parts List ... 9-4
Reel Chassis (S Side) Block 9-4
Reel Chassis (T Side) Block 9-6
Drum and Rotary Head Cleaner Block 9-8
S Tension Regulator Block 9-10
CTL and FE Head Block 9-12
Threading Ring and Pinch Roller Block 9-14
AT Head and Capstan Motor Block 9-16
Pinch Press and Gear Box Block 9-18
T Tension Regulator Block 9-20
Cassette Compartment Block 9-22
Printed Circuit Board (Bottom Side) Block 9-24
Ornamental Panel Block 9-26
Upper Control Panel Block 9-28
Lower Control Panel Block 9-30
Sub Control Panel Block 9-32
Connector Panel Block 9-34
Chassis Block 9-36
9-2-3. Mounted Circuit Board List 9-38
9-2-4. Packing Materials and Supplied
Accessories List 9-41
9-3. SPARE PARTS LIST
– OPTIONAL ACCESSORIES – 9-42
9-3-1. Index 9-42
9-3-2. BKDW-509 9-43
9-3-3. BKDW-510 9-44
9-3-4. BKDW-511 9-45
9-4. SPARE PARTS LIST 9-46

Manual Structure

Purpose of this manual

This manual is the maintenance manual of digital videocassette recorder DVW-A500P, 500P, A500P/1 and 500P/1.
This manual describes the maintenance information of this unit, and the information on primary services such as the replacement of main blocks and circuit boards.

Contents

The following is a summary of all the sections for understanding the contents of this manual.
Refer to the Installation and Maintenance Manual for information exclusive to the DVW-A500P/1 and 500P/1.

Section 1 SERVICE OVERVIEW
Explains the locations of main part, the functions of printed circuit board, the removal and installation of cabinet, and the measures against trouble.

Section 2 RECORDING FORMAT, HEAD CONFIGURATION, AND SIGNAL PROCESSING
Explains the recording format, head configuration, and signal processing.

Section 3 BLOCK DIAGRAMS AND CIRCUIT DESCRIPTIONS
Describes the overall block diagrams, the block diagrams for every circuit block, the frame wiring, and the circuit descriptions.

Section 4 ERROR MESSAGES AND TROUBLESHOOTING
Explains the error messages.

Section 5 MAINTENANCE MODE
Explains the maintenance mode of this unit.

Section 6 REPLACEMENT OF POWER BLOCK AND CIRCUIT BOARDS
Explains how to replace the power block and circuit boards, and how to adjust them after replacement.

Section 7 PERIODIC MAINTENANCE AND INSPECTION
Explains the cleaning procedure and periodic check.

Section 8 REPLACEMENT OF PERIODIC MAINTENANCE PARTS
Explains how to replace the parts that should be replaced periodically and how to adjust them after replacement.

Section 9 SPARE PARTS
Describes the exploded views for the main unit and optional accessories, mounted circuit boards list, packing materials list, and standard accessories list.

Relative manual

Besides this "Maintenance Manual Part 1", the following manuals are available for the DVW-A500P, 500P, A500P/1 and 500P/1.

- **Operation Manual (Supplied with the VTR.)**
  This manual is necessary for application and operation of the VTR.

- **Installation Manual (Supplied with the VTR.)**
  This manual describes the items that are required to install the VTR.

- **Installation and Maintenance Manual**
  (Supplied with the DVW-A500P/1, 500P/1 or the BKDW-515)
  This manual is necessary for installation or maintenance of the control panel BKDW-515.

- **Maintenance Manual Part 2 (available on request)**
  This manual describes the information items (adjustments, board layouts, schematic diagrams, detailed parts list, etc.) that premise the service based on parts.
  If this manual is required, please contact to Sony's service organization.

- **Protocol Manual (available on request)**
  PROTOCOL OF REMOTE-1 (9-Pin) CONNECTOR
  This manual explains the protocol for controlling the VTR via the RS-422A (9-pin serial remote).
  If this manual is required, please contact to Sony's service organization.

SECTION 1
SERVICE OVERVIEW

1-1. NOTES ON POWER SUPPLY BLOCK

1-1-1. Warning on Primary Circuit and Electric Shock

The power supply block consists of the AC-139 board and primary peripheral components. The whole AC-139 board is on the primary side circuit, so pay careful attention to the electric shock. Since the inside of a switching regulator is also on the primary side circuit, treat it with care.

1-1-2. Notes on Resetting the Circuit Breaker

When the breaker on the power supply panel is activated and the button is ejected, remove the cause of the trouble, then push the button.

1-2. REMOVAL/INSTALLATION OF CABINET

1-2-1. Cabinet Removal/Installation

Always switch off the POWER before removing and installing cabinet.

Upper Control Panel

1. Remove the upper lid.
2. Remove the eleven control knobs on an upper control panel.
3. Remove the each one screw on the left and right side.
4. Fingers should be inserted in the space between the upper control panel and chassis, and remove the upper control panel as shown in the figure A.

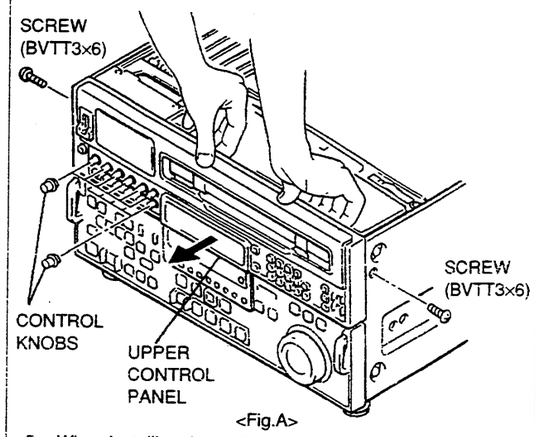

<Fig.A>

5. When installing, insert the projections of the upper control panel into the holes of the chassis, then fix the panel with the screws as shown in the figure B.

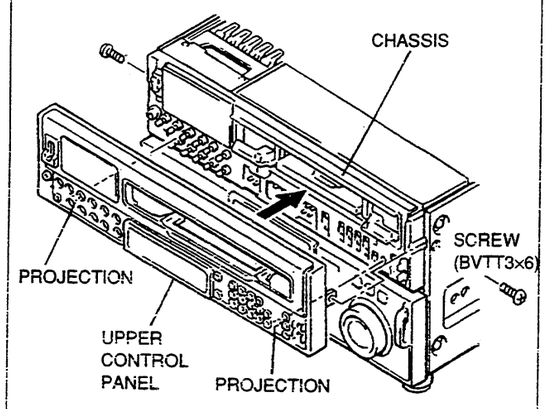

<Fig.B>

Left Side Panel

1. Remove four screws, and remove the handle.
2. Remove four screws and remove the left side panel.

Upper Lid

Loosen three fixing screws, and remove the upper lid by moving in the direction indicated by the arrow.

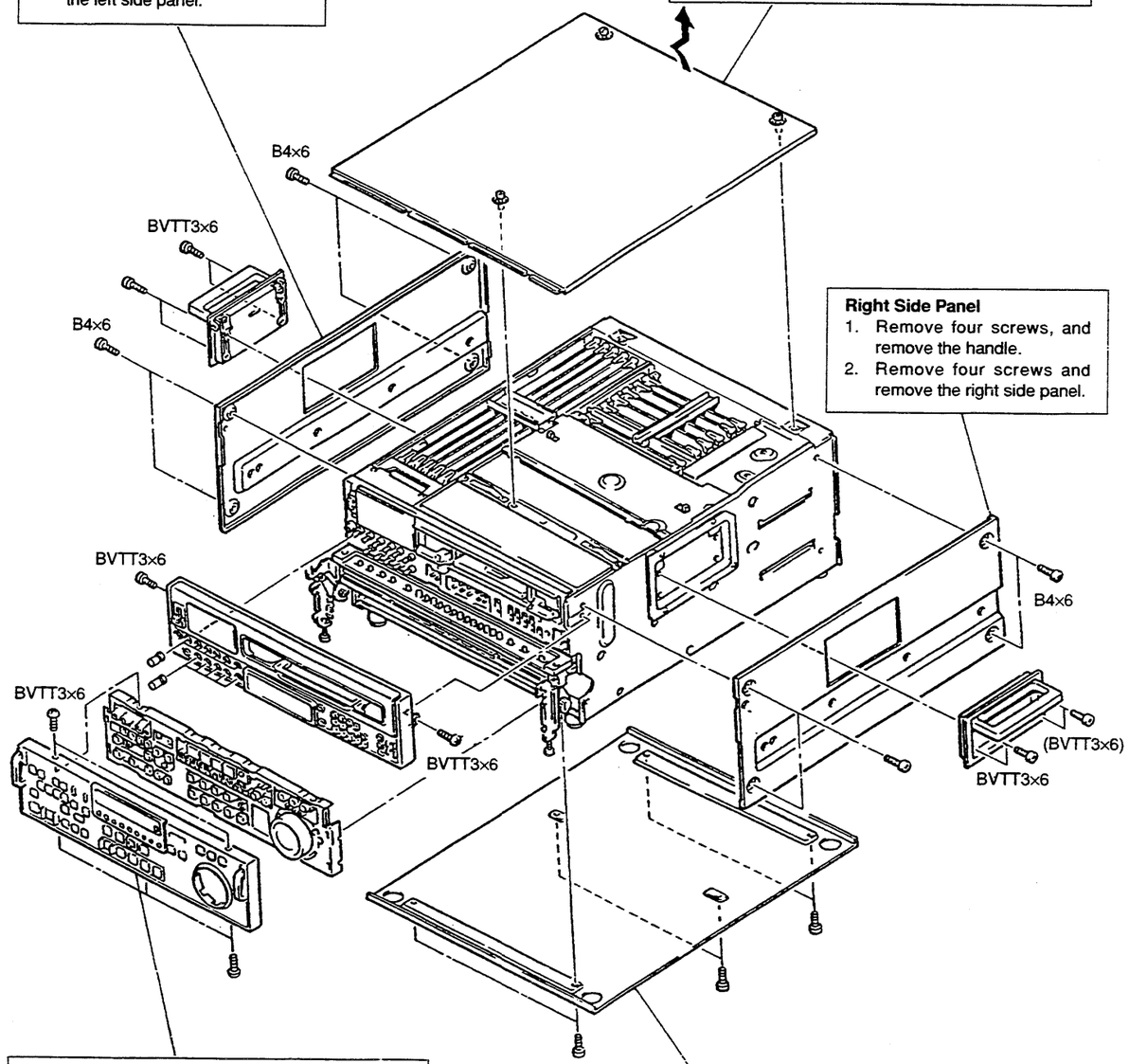

Right Side Panel

1. Remove four screws, and remove the handle.
2. Remove four screws and remove the right side panel.

Lower Control Panel

1. Remove the lower control panel assembly from the unit. (Refer to section 1-9. Removal/Installation of lower control panel assembly)
2. Remove five screws on the top and bottom of the lower control panel assembly, then remove the panel.

Bottom Plate

Put the unit on its right side down, remove six screws and remove the bottom plate.

1-2-2. Cassette Compartment Removal/Installation

Removal

1. Press the EJECT button with the power on.
2. Turn off the POWER.
3. Remove the upper lid.
   (Refer to section 1-2-1. Cabinet Removal/Installation)
4. Remove the plate MD assembly. (Refer to Section 1-3. Removal/Installation of Plate MD)
5. Loosen two screws, and remove the cassette compartment bracket assembly.
6. Disconnect the connector (CN930) on the CL-29 board.

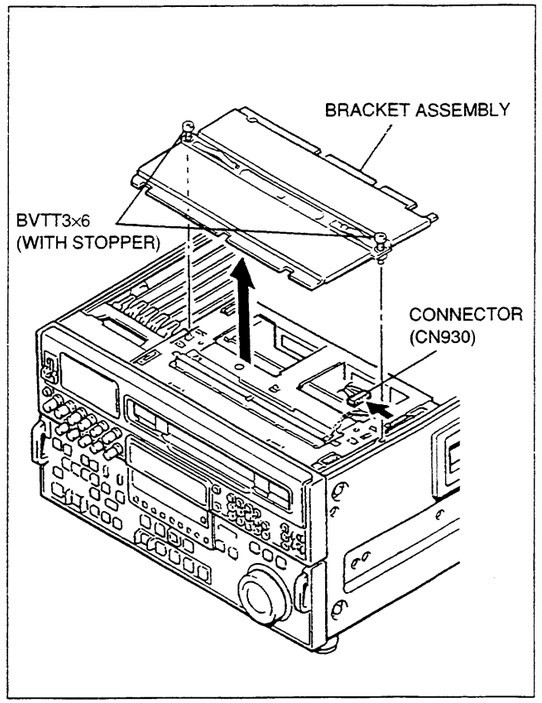

Removal of the Bracket Assembly

7. Remove the four legs of the Cassette Compartment for fixing the Position by lifting the Cassete Compartment slightly and straight with Ⓐ portions (two portions) held.
8. Remove the Cassette Compartment by sliding up it raising up the rear part with the Ⓑ portion held as shown in the figure.

NOTE
In this time, do not move the Cassette Compartment to right and left and do not widen the right and left side panels. If the right and left side panels are widened, a gear position might be changed or some parts might be removed.

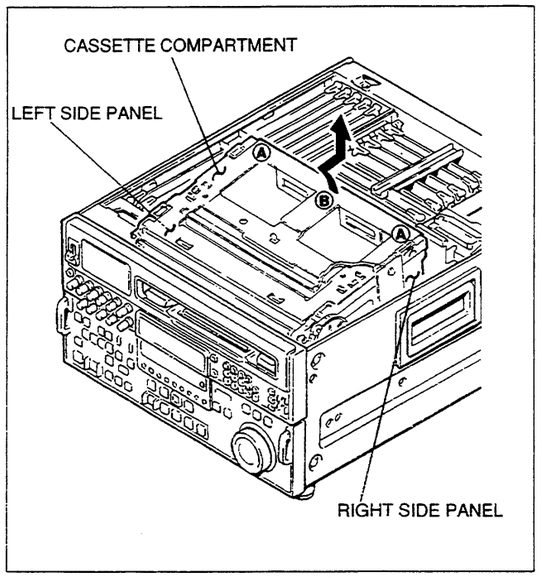

Removal of the Cassette Compartment

9. When the Cassette Compartment is put away from the unit after removing, put it in the direction as shown in the figure (If it is put with the cassette lid at the bottom, the flexible card wire might be damaged).

Installation

10. Set the harness of the connector (CN930) disconnected in step 5 so it is not put between chassis.
11. Install the cassette compartment inserting slantingly in the direction as shown in the figure.
12. Insert the four legs of the Cassette Compartment for fixing the position into the four holes of the mechanical chassis for fixing the position by pressing the Ⓒ portions (two portions) as shown in the figure.
13. After confirming that the cassette compartment is fixed to the chassis, install the cassette compartment bracket assembly.
14. Connect the connector (CN930) on the CL-29 board.

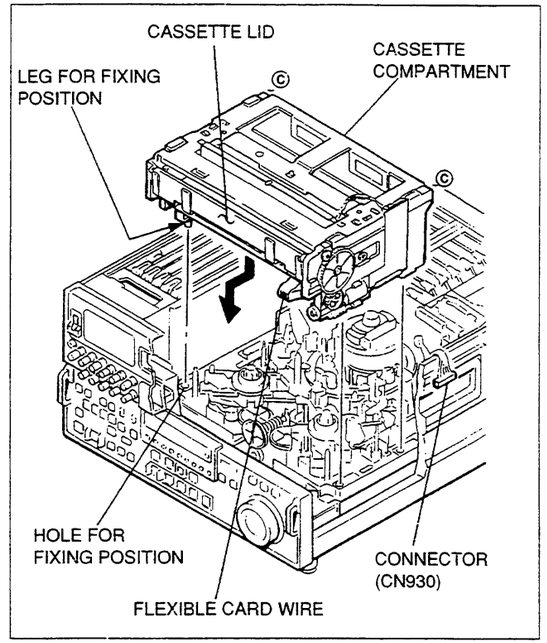

Installation of the Cassette Compartment

1-2-3. Connector Panel Removal/Installation

1. Turn off the POWER.
2. Remove six screws indicated → at the top and bottom on the connector panel.

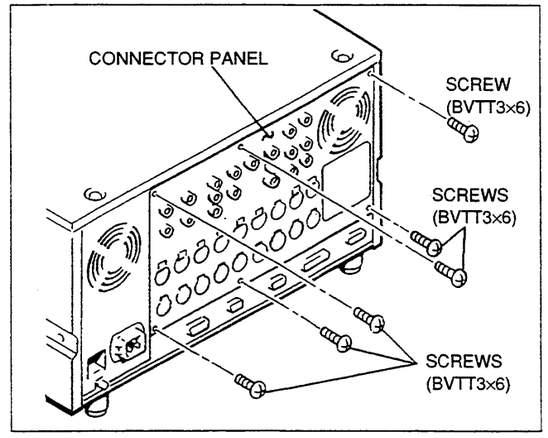

Removal of Screws

3. Remove the connector panel so as not to stretch the harness as shown in the figure.
4. Install the connector panel in the reverse order of steps 1 through 3.

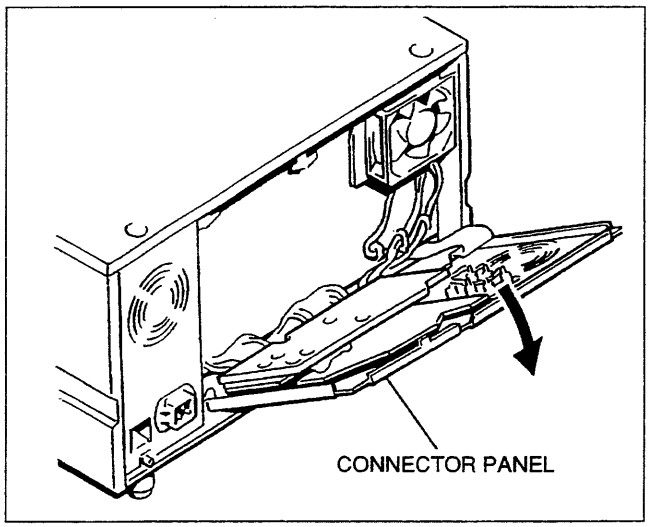

Removal of the Connector Panel

1-2-4. Power Supply Panel Removal/Installation

1. Turn off the POWER.
2. Remove two screws, and open the power supply panel.

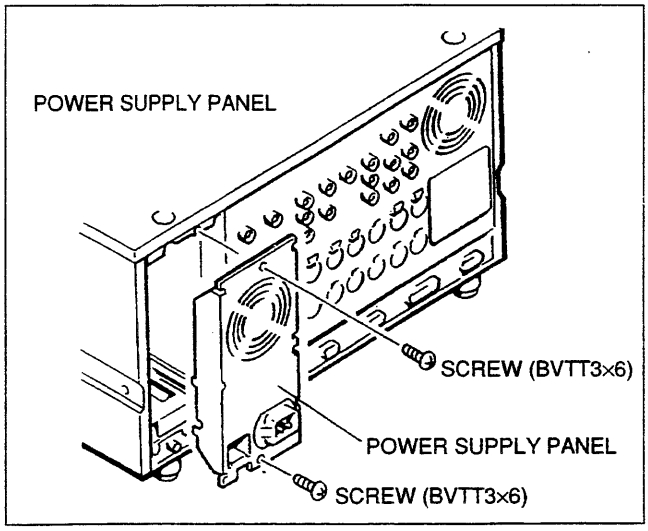

Removal of the Power Supply Panel

3. Remove a screw and a spring washer which secure the ground terminal, then disconnect connector (CN002) on the AC-139 board, then remove the power supply panel.
4. Install the power supply panel in the reverse order of steps 1 through 3.

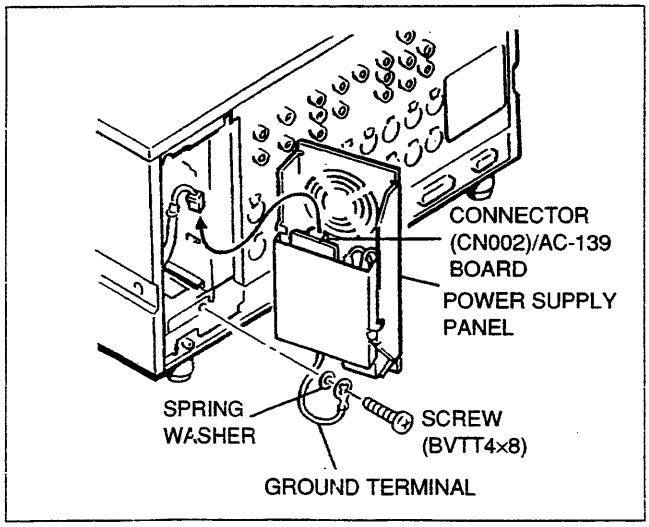

Disconnecting the Connector

1-3. REMOVAL/INSTALLATION OF PLATE MD

Removal

1. Remove the upper lid. (Refer to 1-2. Removal/Installation of Cabinet.)
2. Slide the knobs of the plate MD each in the direction indicated by the arrows (inside).

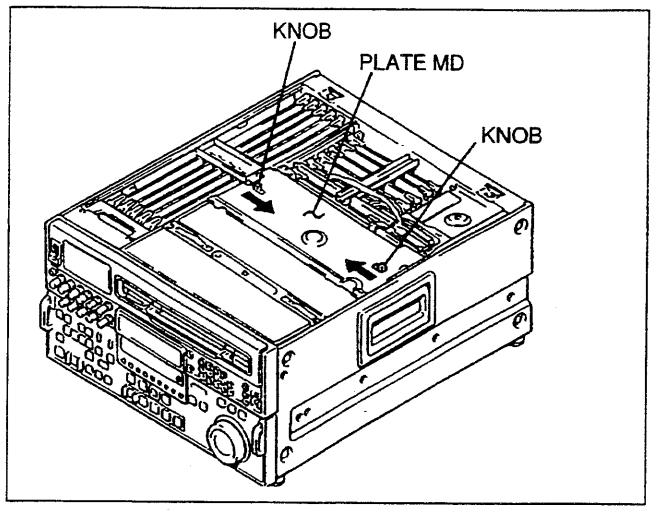

Sliding of the Knob Positions

3. Remove the plate MD.

Installation

4. Insert the plate MD into the clearance shown in the figure.

   NOTE
   Be careful not to put the harness under the plate MD in this case.

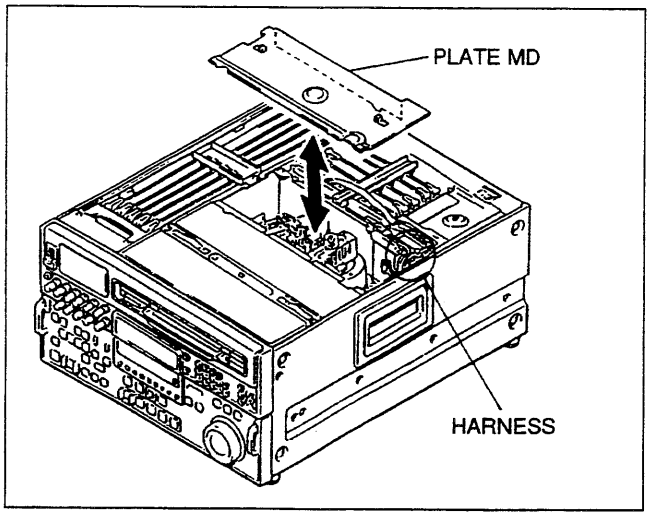

Removal/Installation of Plate MD

5. Slide the knobs of the plate MD each in the direction indicated by the arrows (outside), then fix.
6. Install the upper lid.

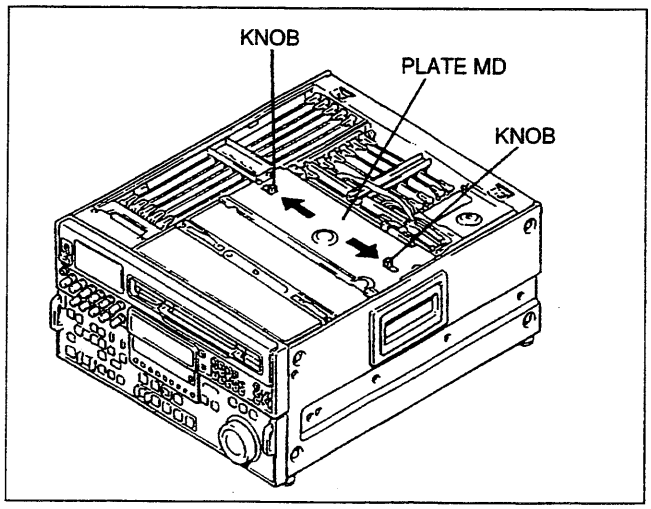

Fixing of the Plate MD

1-4. FUNCTIONS OF PRINTED CIRCUIT BOARD

1-4. FUNCTIONS OF PRINTED CIRCUIT BOARD

The numbers in left colums of the board name are in common with the numbers of Section 1-5-1. Printed Circuit Board Locations.

No.	Board Name	Circuit Function	System Configuration
1	DIF-16	4:2:2 Component Serial Digital Interface with Embedded Audio	Digital Process
2	VPR-1	Video Signal Processor, A/D, D/A, Ref CK Generator, Composite Encoder	
3	DPR-36	Digital Data Processor (Encode/Decode, Error Correction)	
4	APR-1	Audio Signal Processor (A/D, D/A, AES/EBU I/F)	RF/Analog Process
5	EQ-45A (DVW-A500P)	RF Equalizer (REC Current Cont., PB EQ, Analog Betacam PB Buff)	
	EQ-45 (DVW-500P)	RF Equalizer (REC Current Cont., PB EQ)	
6	CUE-1AP (DVW-A500P)	CUE, TC REC/PB & LAU PB Circuit	
	CUE-1 (DVW-500P)	CUE, TC REC/PB Circuit	
7	AP-28 (DVW-A500P)	AFM Demodulator & LAU Noise Reduction for Analog Betacam (PB)	Analog Betacam Playback
8	DM-89 (DVW-A500P)	RF Demodulator for Analog Betacam (PB)	
9	TBC-24 (DVW-A500P)	TBC (A/D Conversion & Write Clock Gen. Blocks)	
10	TBC-23 (DVW-A500P)	TBC (Sequence & Reference Block)	
11	DEC-65	Analog Composite Decoder (optional accessory BKDW-506)	Option
12	AC-139	AC Connector Board with Breaker	Power
13	SW REG	Switching Regulator	
14	HN-181	Connection Board (Drum, etc) with REC Inhibit Sensor	Connection
15	HN-185	Connection Board with Dew Sensor	
16	HN-184	Connection Board (Threading Motor and END Sensor, etc)	
17	SS-52A (DVW-A500P)	System, Servo, DT Control (with Analog Betacam PB Function)	System/Servo Control
	SS-52 (DVW-500P)	System, Servo, DT Control (without Analog Betacam PB Function)	
18	DR-307/200	Motors (Drum, Reel, Capstan, etc) Driver, Solenoids Driver	
19	DT-34	DT Driver	
20	FP-58	Panel Function (SWs, LEDs) Control, CAV Control Level Conversion	Front Panel Function
21	VR-152	Audio REC Level VRs	
22	VR-153	Audio PB Level VRs	
23	SWC-17	Upper Panel Function (Switches, LEDs)	
24	SWC-18	Sub Control Panel Function	
25	SWC-19	System Set-up Panel Function Control	
26	KY-231	Lower Panel Function Control	
27	DP-176	Time Counter Display	
28	PTC-69	Search Dial Sensor	
29	CP-218	Rear Panel Connector Board (Analog Video Signal Buffer)	Rear Panel Function
30	CP-220	Rear Panel Connector Board (Analog/Digital Audio,TC)	
31	RM-130	Parallel (50P) Interface (optional accessory BKDW-509)	Option
32	MB-441	Mother Board	Other
33	PTC-54	Threading FG	
34	CCM-15	Threading Motor/Reel Shift Motor	
35	TR-79	T Tension Sensor,Thread/Unthread End Sensor	
36	PTC-59	Cassette's Holes Sensor	
37	RM-141	T Reel Motor	
38	RM-82	S Reel Motor	
39	SE-228	Reel FG	
40	PTC-71	Reel Position Sensor	
41	TR-78	S Tension Sensor	
42	PD-35	Pinch Solenoid Connection	Cassette Compartment Driver/Sensor
43	CL-29	Cassette Up/Down Motor, Cassette Down Sensor	
44	LP-81	Lamp of Cassette Compartment	
45	PC-70	Cassette In Sensor, Cassette Size Sensor	

1-5. LOCATIONS OF MAIN PART

1-5-1. Printed Circuit Board Locations

The numbers in the figures are in common with the numbers in SECTION 1-4. Functions of Printed Circuit Board.

INDEX

AC-139 ..... ⑫
AP-28 ..... ⑦
APR-1 ..... ④

CCM-15 ..... ㉞
CL-29 ..... ㊸
CP-218 ..... ㉙
CP-220 ..... ㉚
CUE-1/AP ..... ⑥

DEC-65 ..... ⑪
DIF-16 ..... ①
DM-89 ..... ⑧
DP-176 ..... ㉗
DPR-36 ..... ③
DR-307/200 ..... ⑱
DT-34 ..... ⑲

EQ-45/A ..... ⑤

FP-58 ..... ⑳

HN-181 ..... ⑭
HN-184 ..... ⑯
HN-185 ..... ⑮

KY-231 ..... ㉖

LP-81 ..... ㊹

MB-441 ..... ㉜

PC-70 ..... ㊺
PD-35 ..... ㊷
PTC-54 ..... ㉝
PTC-59 ..... ㊱
PTC-69 ..... ㉘
PTC-71 ..... ㊵

RM-130 ..... ㉛
RM-141 ..... ㊲
RM-82 ..... ㊳

SE-228 ..... ㊴
SS-52/A ..... ⑰
SW REG ..... ⑬
SWC-17 ..... ㉓
SWC-18 ..... ㉔
SWC-19 ..... ㉕

TBC-23 ..... ⑩
TBC-24 ..... ⑨
TR-78 ..... ㊶
TR-79 ..... ㉟

VPR-1 ..... ②
VR-152 ..... ㉑
VR-153 ..... ㉒

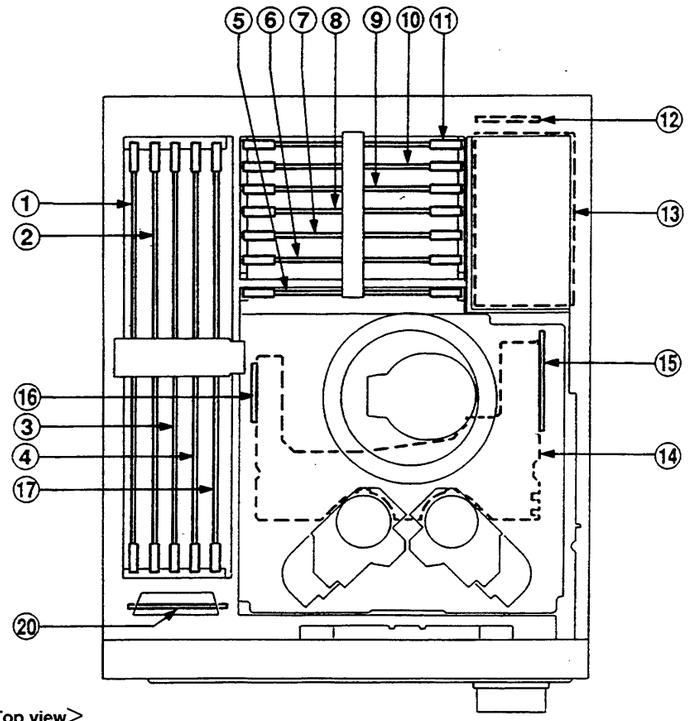

<Top view>

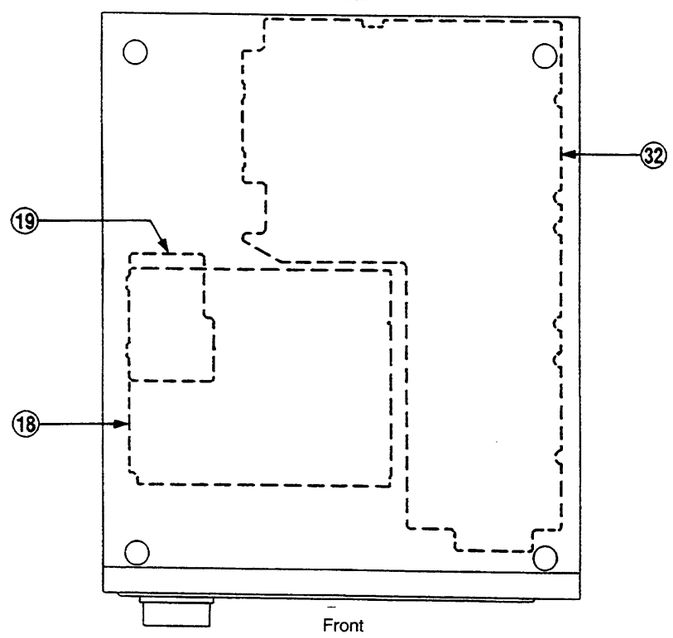

<Bottom view>

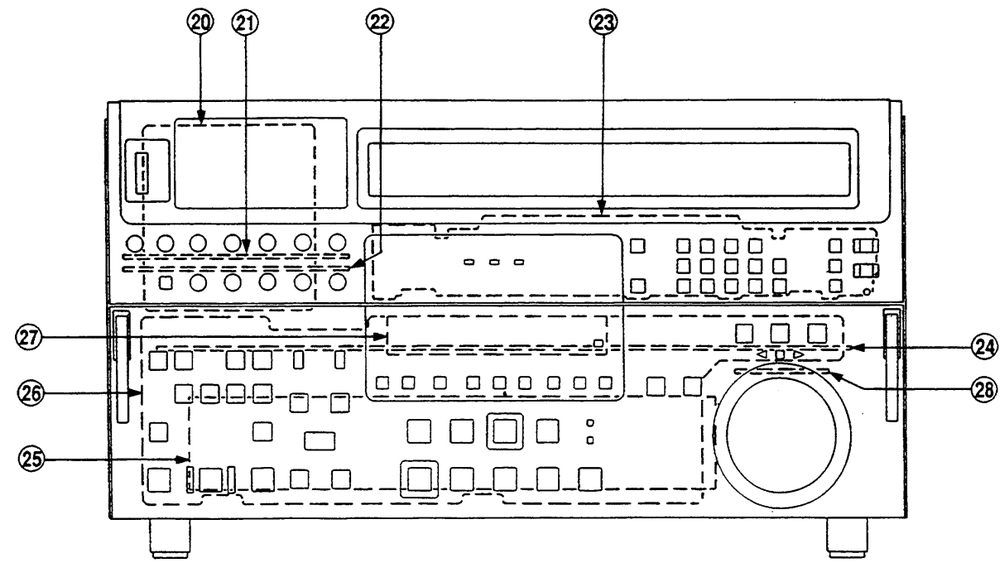

<Front view>

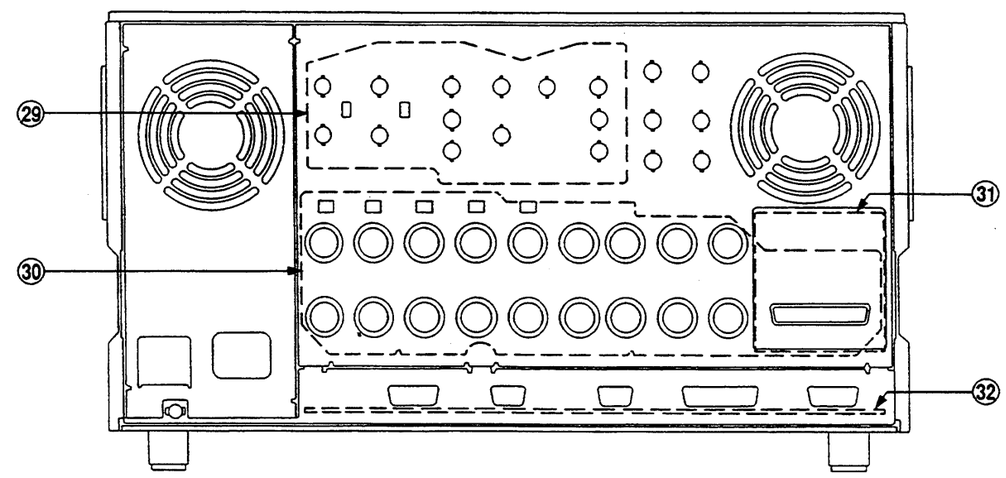

<Rear view>

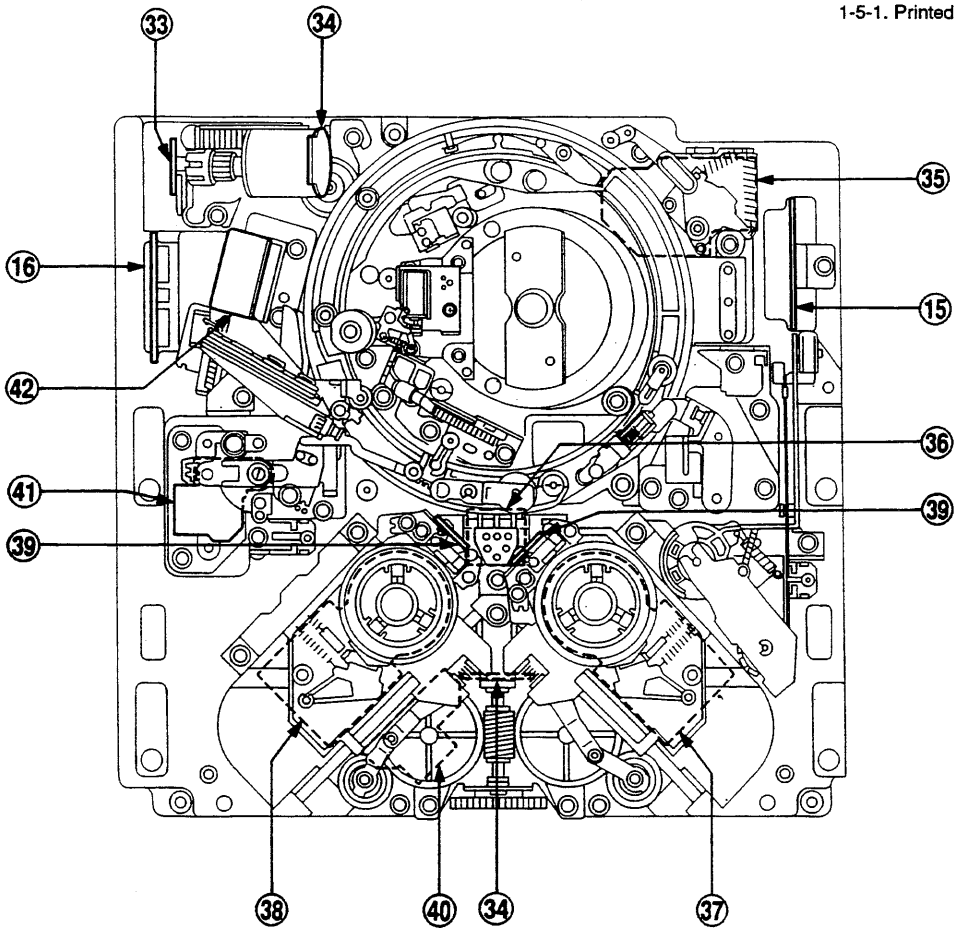

<Top view>

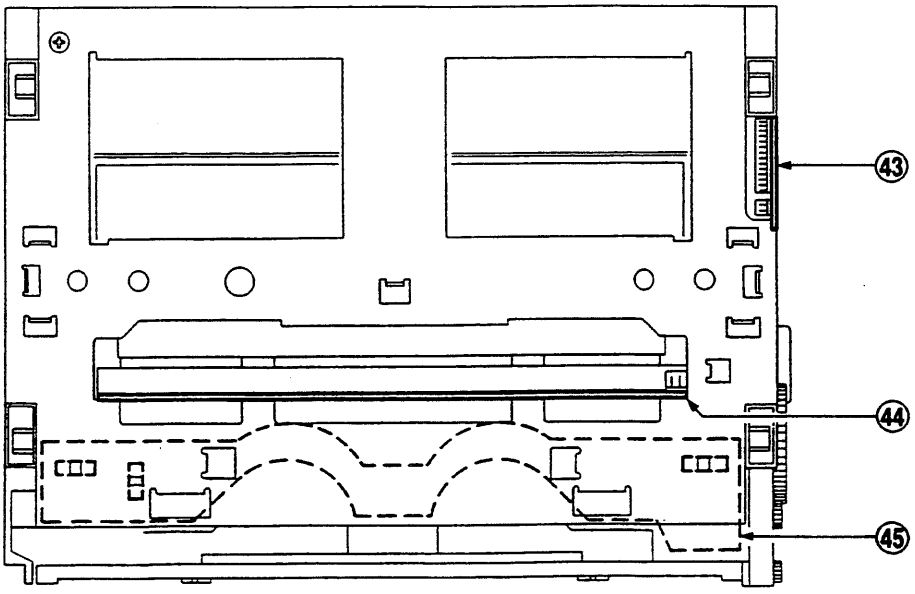

<Top view of casssette compartment>

1-5-2. Main Mechanical Part Locations

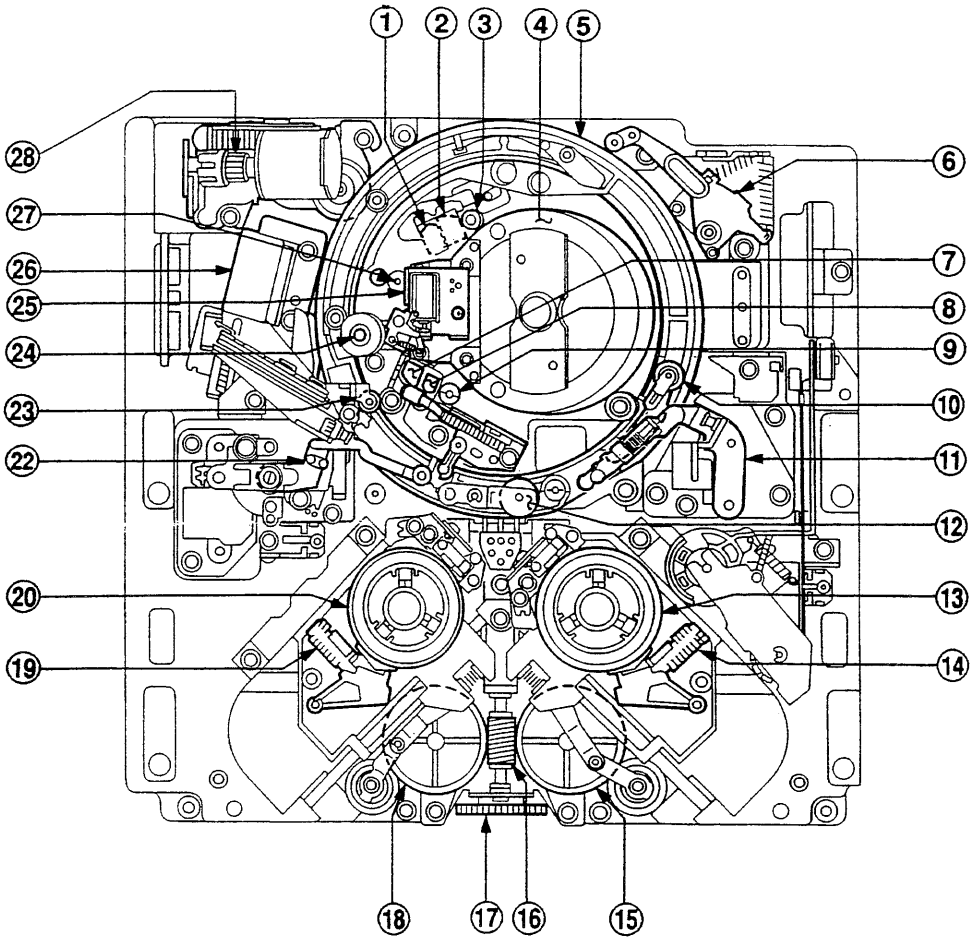

<Top view>

INDEX

① Audio/TC head
② Audio/TC erase head
③ TG-3 tape guide
④ Head drum
⑤ Threading ring
⑥ T tension regulator arm
⑦ Full erase head
⑧ CTL head
⑨ TG-2 tape guide
⑩ Audio/TC head cleaner
⑪ T drawer arm
⑫ Pinch roller
⑬ T reel table
⑭ T brake assembly
⑮ T worm wheel
⑯ Worm gear
⑰ Drive gear
⑱ S worm wheel
⑲ S brake assembly
⑳ S reel table
㉒ S tension regulator arm
㉓ TG-0 tape guide
㉔ Capstan shaft
㉕ Cleaning roller block
㉖ Pinch press block
㉗ TG-4 tape guide
㉘ Threading gear block

1-5-3. Function and Location of Sensors

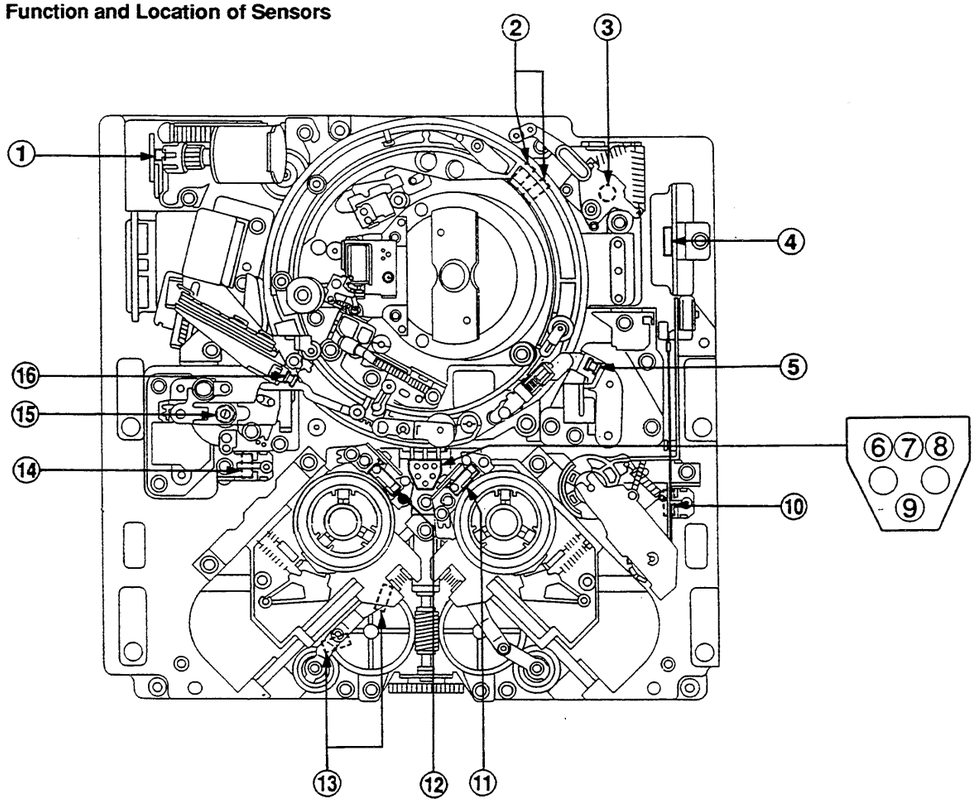

<Top view>

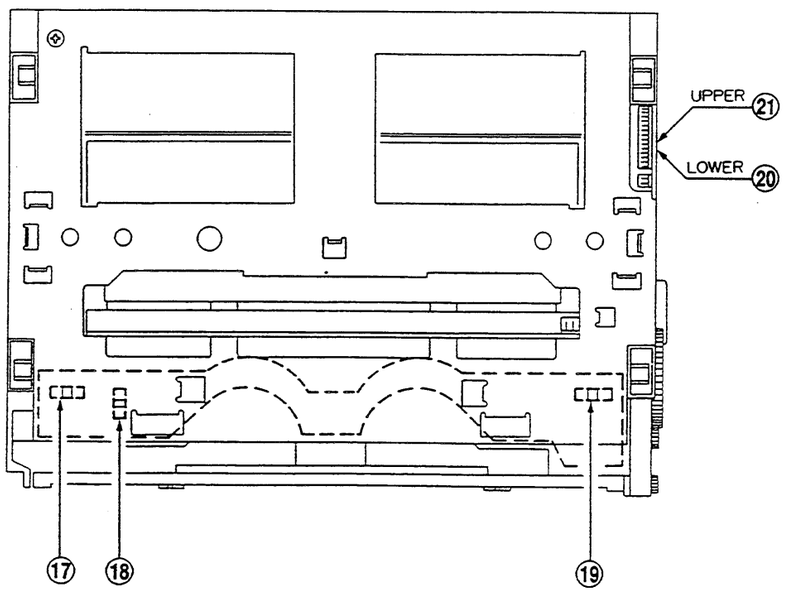

<Top view of cassette compartment>

① **Threading motor rotation sensor**
The threading motor rotation sensor detects the rotation speed of the threading motor.
The FG output signal of this detection sensor is input to the servo circuit to control the threading speed so that the tape is not damaged during threading and unthreading.

② **Threading-end/unthreading-end sensor**
This sensor detects whether the threading ring reaches the threading-end or unthreading-end position.

③ **T tension regulator arm sensor**
During recording and playback, this sensor detects the tension arm position and controls the reel torque to keep a constant T tape tension.

④ **Condensation sensor**
This sensor detects whether the dew condensation occurs in the unit.

⑤ **Tape top sensor**
This sensor detects the top of the tape, and in addition detects the tape end of the tape that runs in the reverse direction.

⑥ **Reel hub diameter sensor**
The reel hub diameter of a cassette tape varies depending on the length of the tape wound on the cassette tape. The reel hub diameter sensor detects the reel hub diameter using a tub on the back side of the cassette tape. The output signal of this sensor is input to the servo circuit to control the rotation speed and torque of the reel motor.

⑦ **Metal tape sensor**
Using a tub on the back side of the cassette tape, this sensor detects whether an oxide tape or metal tape is being inserted into the unit. (Only during analog tape playback)

⑧ **Tape thickness sensor**
Using a tub on the back side of the cassette tape, this sensor detects the thickness of the tape wound on a cassette tape that is being inserted into the unit.

⑨ **Analog/digital tape sensor**
Using a tub on the back side of the cassette tape, this sensor detects whether an analog tape or digital tape is being inserted into the unit.

⑩ **L cassette REC INHIBIT sensor**
This is a REC inhibit plug detector switch for the digital large cassette.

⑪ **T reel table rotation sensor**
This sensor detects the rotation of the take-up reel table. The FG output signal of this sensor is input to the servo circuit to control the rotation speed of the reel motor.

⑫ **S reel table rotation sensor**
This sensor detects the rotation of the supply reel table. The FG output signal of this sensor is input to the servo circuit to control the rotation speed of the reel motor.

⑬ **Reel L/S position sensor**
This sensor detects whether the reel table moves to the correct position according to the size of the inserted cassette tape.

⑭ **S cassette REC INHIBIT sensor**
This is a REC inhibit plug detection switch for the digital small cassette.

⑮ **S tension regulator arm sensor**
During recording and playback, this sensor detects the tension arm position and controls the reel torque to keep a constant S tape tension.

⑯ **Tape end sensor**
This sensor detects the end of the tape that runs in the forward direction.

⑰ **Cassette-in sensor (L)**
This sensor detects whether a cassette is being inserted.

⑱ **Cassette L/S size sensor**
This sensor detects whether the inserted cassette tape is an L size or S size.

⑲ **Cassette-in sensor (R)**
This sensor detects whether a cassette is being inserted.

⑳ **Cassette-down (2) sensor**
㉑ **Cassette-down (1) sensor**
The cassette-down (1) sensor detects the movement of the cassette compartment through combined ON/OFF operation of the cassette-down (2) sensor, the cassette-down (1) sensor, and a cassette-in sensor.

1-5-3. Function and Location of Sensors

1-6. LED INDICATOR INFORMATION ON BOARDS

Lot No. 907 and higher

DVW-A500P (EK): S/N 20718 and higher
DVW-A500P (UC): S/N 10304 and higher
DVW-500P (EK): S/N 16156 and higher
DVW-500P (UC): S/N 10211 and higher

<Top view>

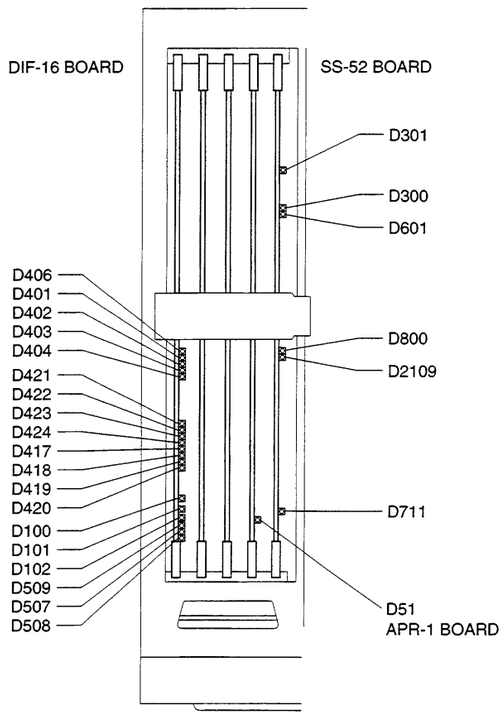

DVW-A500P (EK): S/N 10001 through 20717
DVW-A500P (UC): S/N 10001 through 10303
DVW-500P (EK): S/N 10001 through 16155
DVW-500P (UC): S/N 10001 through 10210

<Top view>

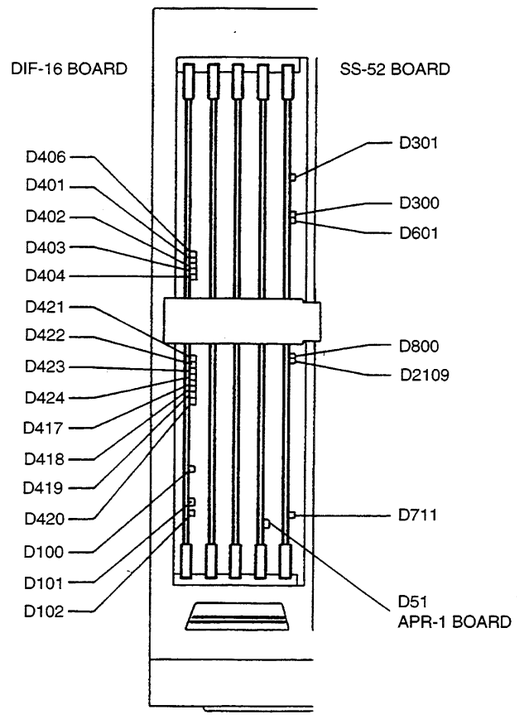

DIF-16 Board

LED No.	Name	Color	Description	Normal State
D100	DIF TEST YP	Red	Lights when the Y PARITY test mode is executed in the maintenance mode.	Goes off
D101	PARA IN P ERROR	Red	Lights when an error occurs in the video signal that is sent from VPR board to DIF board.	Goes off
D102	TX625/$\overline{525}$	Green	Indicates the state of 4: 2: 2 component serial digital interface output. This state is set 625/50 by C.P.U BUS CONTROL.	Goes off
D401	D1 INX ERROR	Red	Lights when no color frame information is contained in a D1 serial signal that is input from the SERIAL V/A INPUT connector.	———
D402	TRS ERROR	Red	Lights when a valid 4: 2: 2 component serial digital signal is not input to the SERIAL V/A INPUT connector.	———
D403	SERIAL IN	Green	Lights when a 4: 2: 2 component serial digital signal is input to the SERIAL V/A INPUT connector.	Goes on
D404	RX625/$\overline{525}$	Green	Detects 625/50 and 525/60 automatically for a 4: 2: 2 component serial digital signal that is input from the SERIAL V/A INPUT connector. Lights when 625/50 is detected. However, always lights when no SIF signal is input.	Goes off

DIF-16 Board

LED No.	Name	Color	Description	Normal State
D406	RX TEST ERROR	Red	Lights when an error occurs in the maintenance mode.	Goes off
D417	RX AUDIO EXIST A4	Green	Lights when an AUDIO CH4 signal is detected from the serial digital video/audio input signal.	Goes on
D418	RX AUDIO EXIST A3	Green	Lights when an AUDIO CH3 signal is detected from the serial digital video/audio input signal.	Goes on
D419	RX AUDIO EXIST A2	Green	Lights when an AUDIO CH2 signal is detected from the serial digital video/audio input signal.	Goes on
D420	RX AUDIO EXIST A1	Green	Lights when an AUDIO CH1 signal is detected from the serial digital video/audio input signal.	Goes on
D421	RX AUDIO ERROR A4	Red	Lights when an error occurs in the AUDIO CH4 signal detected from a serial digital video/audio input signal or when the AUDIO CH4 signal cannot be received normally.	Goes off
D422	RX AUDIO ERROR A3	Red	Lights when an error occurs in the AUDIO CH3 signal detected from a serial digital video/audio input signal or when the AUDIO CH3 signal cannot be received normally.	Goes off
D423	RX AUDIO ERROR A2	Red	Lights when an error occurs in the AUDIO CH2 signal detected from a serial digital video/audio input signal or when the AUDIO CH2 signal cannot be received normally.	Goes off
D424	RX AUDIO ERROR A1	Red	Lights when an error occurs in the AUDIO CH1 signal detected from a serial digital video/audio input signal or when the AUDIO CH1 signal cannot be received normally.	Goes off
*D507	ENC1 ADJUST	Green	Lights when the VCO frequency is almost 27 MHz adjusting the D1 ENC1 VCO in the maintenance mode A23 : DIF VR.	Unsettled
*D508	ENC2 ADJUST	Green	Lights when the VCO frequency is almost 27 MHz adjusting the D1 ENC2 VCO in the maintenance mode A23 : DIF VR.	Unsettled
*D509	DEC ADJUST	Green	Lights when the VCO frequency is almost 27 MHz adjusting the D1 DEC VCO in the maintenance mode A23 : DIF VR.	Unsettled

SS-52 Board

LED No.	Name	Color	Description	Normal State
D300	———	———	Unused	———
D301	SYS 1	Amber	Blinks during SYS 1 V25 CPU normal operation.	Blinks
D601	SYS 2	Amber	Blinks during SYS 2 Z80 CPU normal operation.	Blinks
D711	SV	Amber	Checks the ROM and RAM for communication when the power switch is set to ON. Lights for scores ms at intervals 1 to 2 seconds. (For the blinking pattern when abnormality occurred, refer to the figure shown right.)	Blinks
D800	DRUM	Amber	Blinks during drum microcomputer normal operation. Usually lights for 30 msecond at intervals of about one second. The blinking interval is inverted when the drum is locked.	Blinks
D2109	DT	Amber	Blinks during DT microcomputer FMC-16 CPU normal operation.	Blinks

* : Lot No. 907 and higher

APR-1 Board

LED No.	Name	Color	Description	Normal State
D51	APR 1	Amber **Red	Blinks during APR 1 microcomputer normal operation (when a 1/2VD signal is received from the SS-52 board).	Blinks

** : Lot No. 910 and higher

<Blinking Pattern of D711 on SS-51 Board>

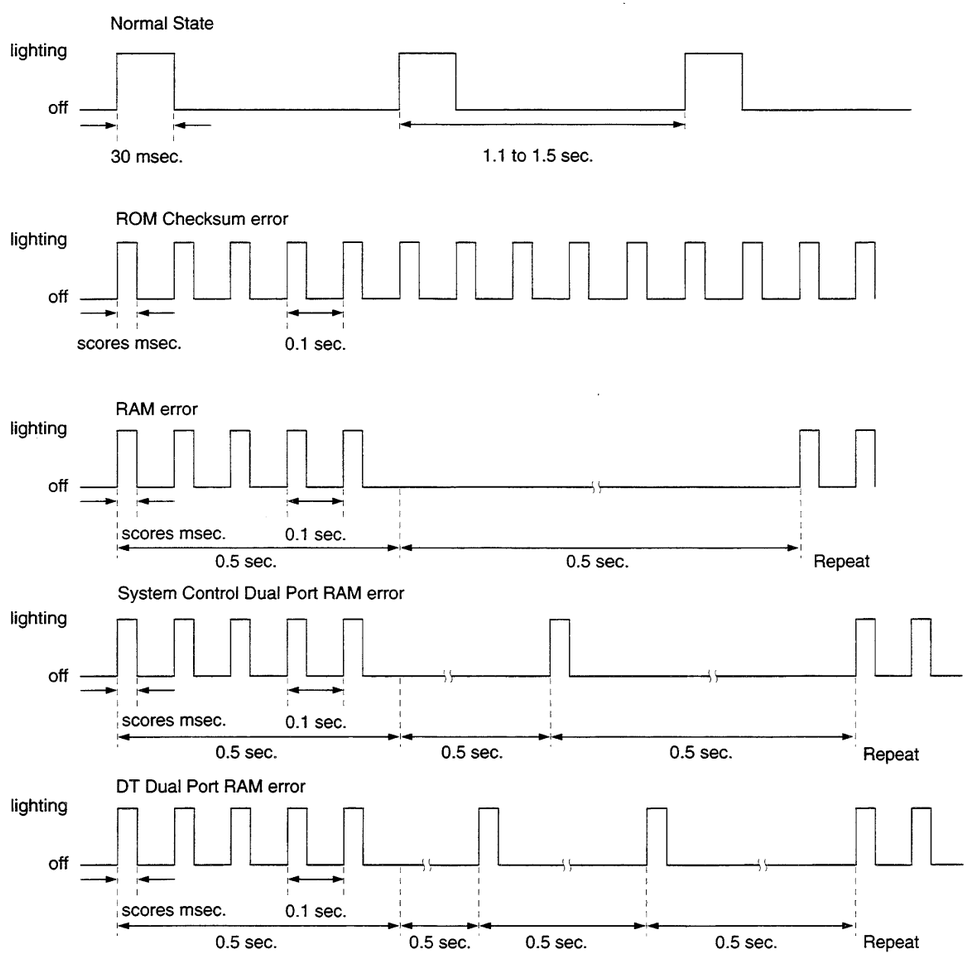

TBC-23 BOARD **DM-89 BOARD**

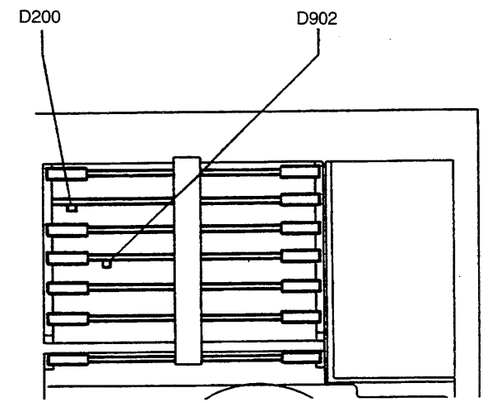

(for DVW-A500P)

<Top view>

DM-89 Board (for DVW-A500P)

LED No.	Name	Color	Description	Normal State
D902	ADJUST	Amber	Usually lights for about 10 msecond at intervals of about one second. The blinking interval is inverted when the unit is in the adjustment mode (when switch S901-1 is set to ON).	Blinks

TBC-23 Board (for DVW-A500P)

LED No.	Name	Color	Description	Normal State
D200	TBC	Amber	Lights once a second during TBC microcomputer normal operation.	Blinks

1-7. MECHANISM OF CASSETTE

As shown in the figure below, plugs and tabs are provided at the back side of the cassette tape.

Analog cassette tape

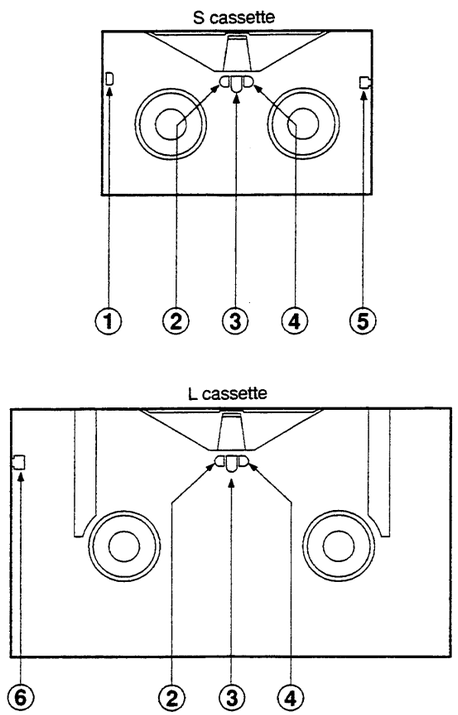

Digital cassette tape

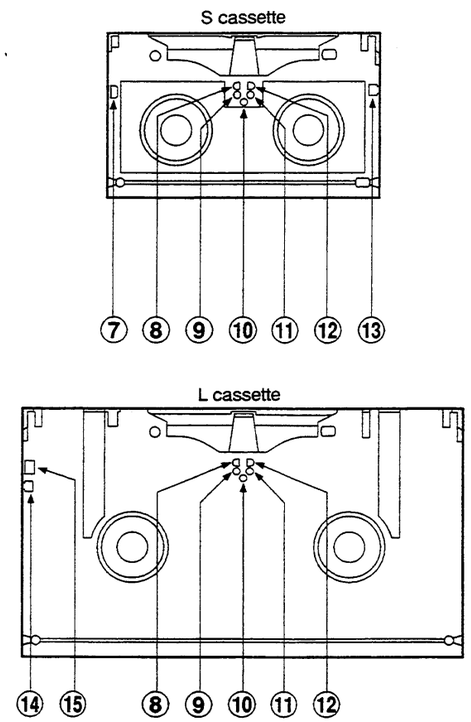

① S cassette REC inhibit tab (for oxide tape)
② Video tape thickness detection tab
③ Metal tape detection tab
④ Reel hub diameter detection tab
⑤ S cassette REC inhibit plug (for metal particle tape)
⑥ L cassette REC inhibit plug

⑦ S cassette analog REC inhibit plug (originally open)
⑧ Video tape thickness detection tab
⑨ SPARE ID
⑩ Digital tape detection hole
⑪ SPARE ID
⑫ Reel hub diameter detection tab
⑬ S cassette digital REC inhibit plug
⑭ L cassette digital REC inhibit plug
⑮ L cassette analog REC inhibit plug (originally open)

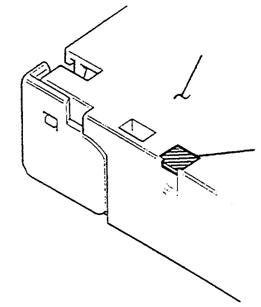

Fig 1.

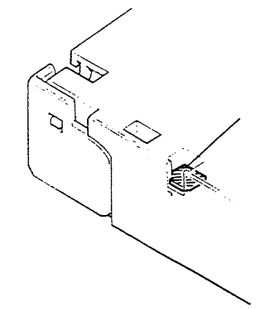

Fig 2.

The presence or absence of these plugs and tabs determines the cassette status as shown in the table below.

Analog cassette tape

No.	Plug and tab	Cassette status with or without plugs and tabs	
		With plugs and tabs	Without plugs and tabs
①	S cassette REC inhibit tab (for oxide tape)	Can be recorded (refer to Fig. 1).	Cannot be recorded (refer to Fig. 2).
②	Video tape thickness detection tab	A 20 µm thick tape is wound on the cassette.	A 15 µm thick tape is wound on the cassette.
③	Metal tape detection tab	An oxide tape is wound on the cassette.	A metal tape is wound on the cassette.
④	Reel hub diameter detection tab	For small hub	For large hub
⑤	S cassette REC inhibit plug (for metal particle tape)	Can be recorded (refer to Fig. 1).	Cannot be recorded (refer to Fig. 2).
⑥	L cassette REC inhibit plug		

Digital cassette tape

No.	Plug and tab	Cassette status with or without plugs and tabs	
		With plugs and tabs	Without plugs and tabs
⑦	S cassette analog REC inhibit plug (originally open)	————	Analog signals cannot be recorded.
⑧	Video tape thickness detection tab	————	A 14 µm thick tape is wound on the cassette.
⑨	SPARE ID	————	————
⑩	Digital tape detection hole	An analog tape is wound on the cassette.	A digital tape is wound on the cassette.
⑪	SPARE ID	————	————
⑫	Reel hub diameter detection tab	For small hub	For large hub
⑬	S cassette digital REC inhibit plug	Can be recorded (refer to Fig. 1).	Cannot be recorded (refer to Fig. 2).
⑭	L cassette digital REC inhibit plug	Can be recorded (refer to Fig. 1).	Cannot be recorded (refer to Fig. 2).
⑮	L cassette analog REC inhibit plug (originally open)	————	Analog signals cannot be recorded.

1-8. HOW TO PULL OUT/PUSH IN LOWER CONTROL PANEL

1. Take both side handles of a lower control panel and pull them slightly forward. Pull them more strongly, then the lower control panel is fixed.
2. Lift the lower control panel. The panel can be moves maximum 90 degrees.

   NOTE
   The lower control panel can be tilted up to 90 degrees by approximately 15 degree step. When using the lower control panel on the tilt, turn the knobs clockwise to hold the panel firmly.

3. When put back the panel assembly in the unit, replace it horizontally to the front side of the unit and then push it in the unit.

   NOTE
   Put back the panel assembly in the unit surely after using the unit.

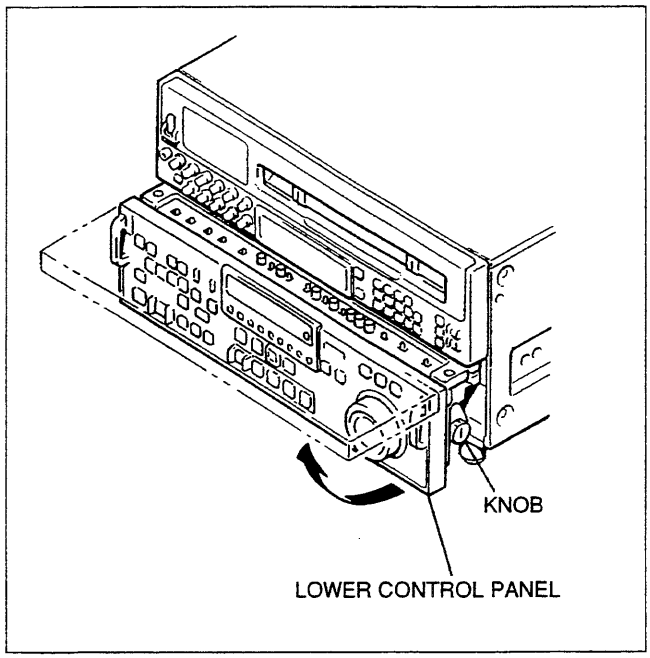

Pulling out/Pushing in the Lower Control Panel

1-9. REMOVAL/INSTALLATION OF LOWER CONTROL PANEL ASSEMBLY

Removal

1. Fix a lower control panel at 90 degrees.
   (Refer to Sec. 1-8. How to Pull out/Push in the Lower Control Panel)
2. Disconnect the connector (CN580) on the system set-up panel.
3. Loosen the two black screws on the lower control panel assembly. (Loosen the screws until screw's top are exposed from the lack of the lower control panel assembly.)

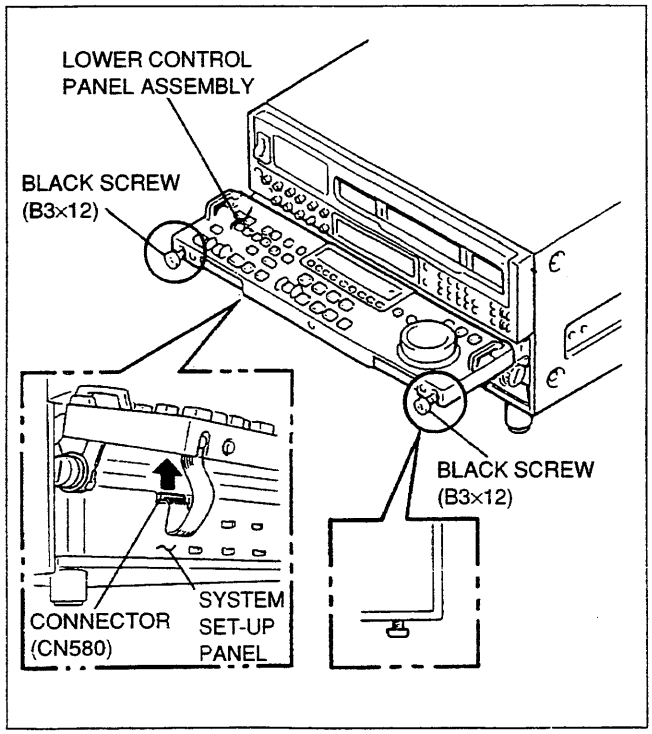

Disconnecting the Connector

4. While pushing the loosen black screws in the direction of the arrow, remove the lower control panel assembly from the arms.

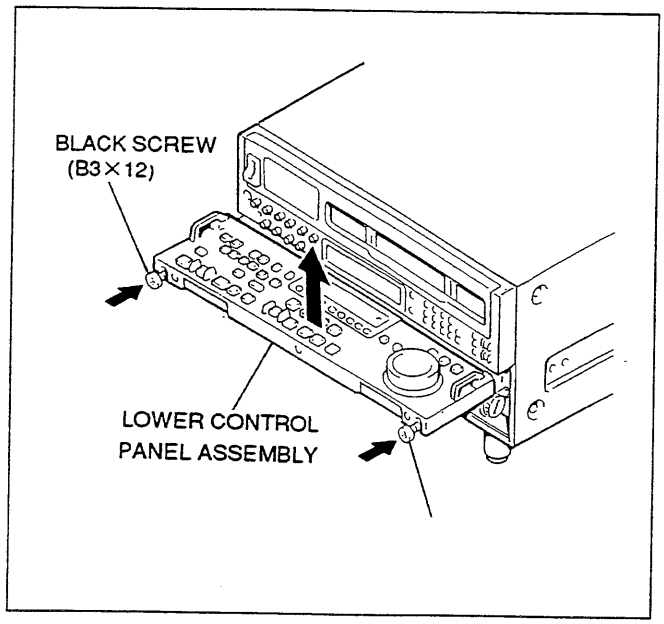

Removal of the Panel Assembly

Installation

5. Connect the harness of the panel assembly to the connector (CN580) on the system set-up panel.
6. Fix the arms at 45 degrees.
7. Set the notches of the panel assembly to the claws of the arms and insert the panel assembly until making a click sound.
   Then fix the assembly with the two screws.
8. When putting back the panel assembly in the unit, replace it horizontally to the front side of the unit and then push it in the unit.

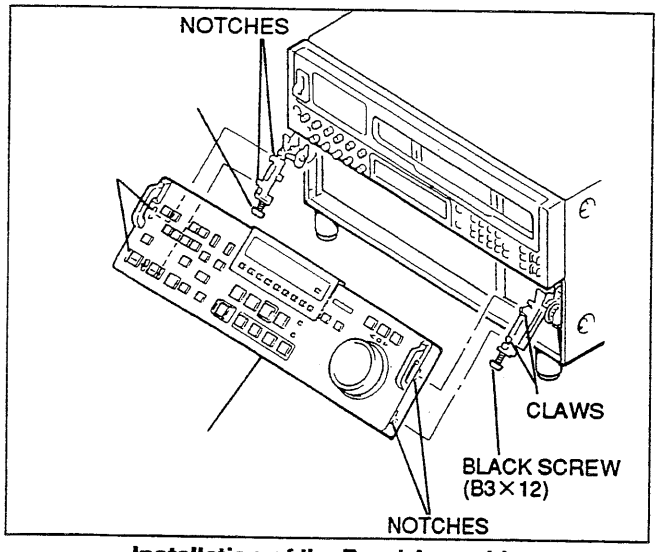

Installation of the Panel Assembly

1-10. HOW TO TAKE OUT THE CASSETTE WHEN THE TAPE IS SLACKING

When the tape is slacked in the VTR, take out the cassette tape in the procedure below while taking care not to damage the tape.

1. Turn off the POWER.
2. Remove the upper lid.
   (Refer to Section 1-2. Removal/Installation of Cabinet.)
3. Remove the plate MD.
   (Refer to Section 1-3. Removal/Installation of Plate MD.)
4. Rotate the rotation detection pulley of the threading motor block in the direction of the arrow with fingers by about a half turn and slacken the tape.
5. Shift the ME lever toward the front panel and wind the tape inside the cassette.

   NOTE
   Do not shift the ME lever during normal operation (during reel table operation).

   Repeat steps 4 and 5 until the unit is put into the unthreading-end state and until the tape is wound completely.
6. Fix the lower control panel assembly at the position of 90 degrees.
   (Refer to Section 1-8. How to Pull out/Push in Lower Control Panel.)

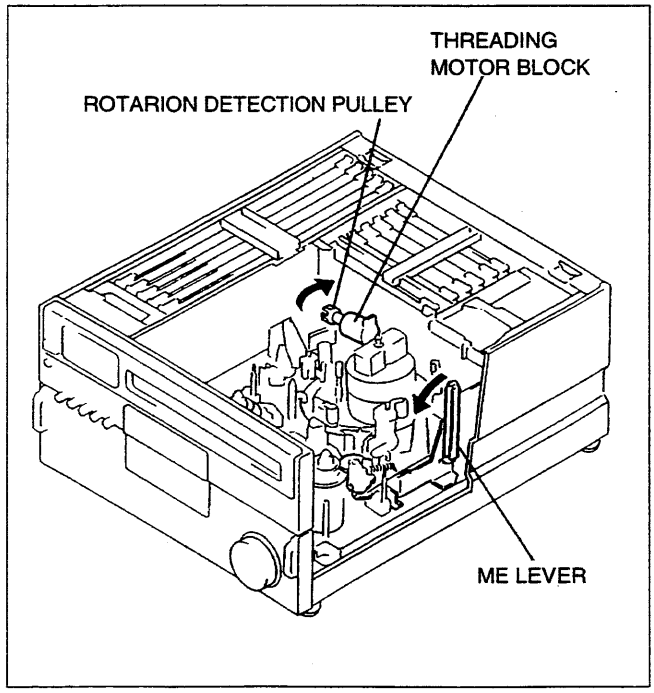

Winding of a Tape

7. Turn the yellow pulley of the cassette compartment motor shown in the figure clockwise until the cassette tape is ejected completely.

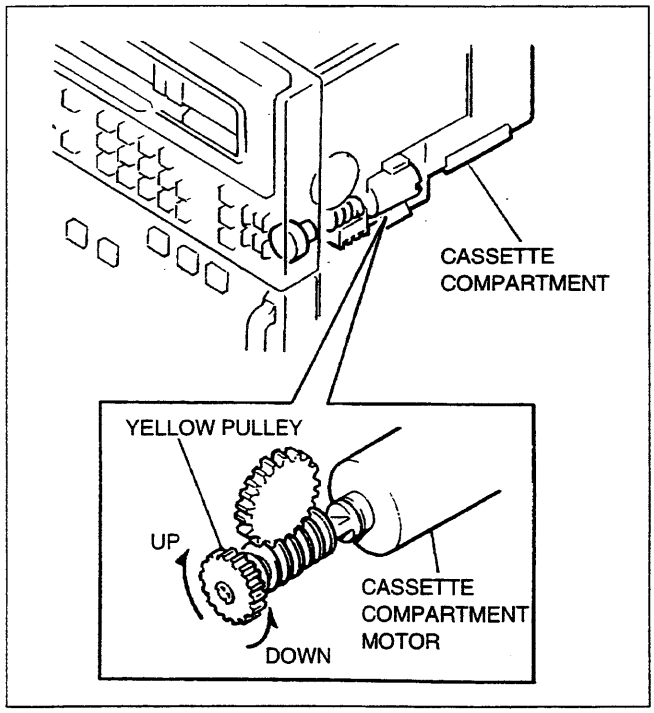

Ejection of a Cassette Tape

1-11. CLEANING WHEN THE HEADS ARE CLOGGED

If the video heads are clogged, clean the heads as the following procedure.
If the video heads are clogged after cleaning by cleaning tape, clean them by cleaning piece.

1-11-1. Cleaning by Cleaning Tape

NOTE
Make sure to use the cleaning tape BCT-5CLN. If the cleaning is performed by other cleaning tape, not the BCT-5CLN, unusual friction or damage of the video head may occur.

1. Insert the cleaning tape BCT-5CLN in the unit.
2. Press the EJECT button simultaneously with PLAY button.
   Head cleaning starts.
3. After 5 seconds, the cleaning tape will be ejected automatically.

   NOTE
   Be sure to eject the cleaning tape after cleaning to avoid damages to the heads.

4. Confirm that the head clog is clear.

1-11-2. Cleaning by Cleaning Cloth

Caution

- Turn the power off before cleaning.
- Each block in the mechanical deck consists of a precision part and is adjusted precisely. Be careful not to damage each part and to apply an excessive force during cleaning.
- Do not touch the greased portions during cleaning. If grease attaches to a cleaning cloth, replace the cleaning cloth by new one. If a cleaning cloth smeared with grease is used, grease may attach to the places where it should not.
- Do not insert a cassette tape before a cleaning fluid completely evaporates after cleaning.

Tools

- Cleaning cloth: 3-184-527-01
- Cleaning fluid: 9-919-573-01

Caution
Do not use a cotton swab to clean the rotary heads.

Procedures

1. Turn the power off.
2. Remove the upper lid.
   (Refer to Section 1-2-1.)
3. Remove the plate MD.
   (Refer to Section 1-3.)
4. Remove the cassette compartment.
   (Refer to Section 1-2-2.)
5. Loosen the two screws and remove the upper drum cover.

   NOTE
   These screws cannot be removed because of stoppers.

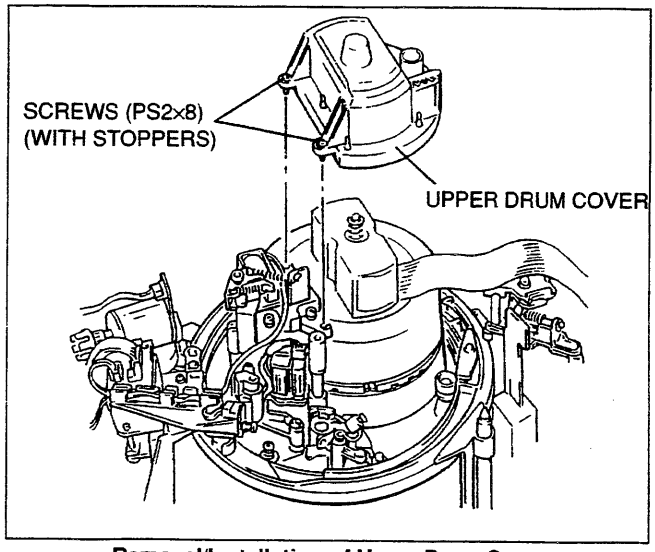

Removal/Installation of Upper Drum Cover

6. Press the cleaning cloth moistened with cleaning fluid slightly against the rotary heads.
7. Rotate the inner drum slowly counterclockwise two or three turns and clean the rotary heads.

Caution
Be sure to rotate the inner drum counterclockwise and clean the rotary heads along the circumference. Do not rotate the inner drum in the direction opposite to the specified direction (clockwise) or clean it in the vertical direction. This may damage the rotary heads.

8. After cleaning, wipe it with a dry cleaning cloth two or three times.
9. Tighten the two screws while pressing the upper drum cover towards the drum support direction.

   Tightening torque: 14.7×10^{-2} N•m (1.5 Kgf•cm)

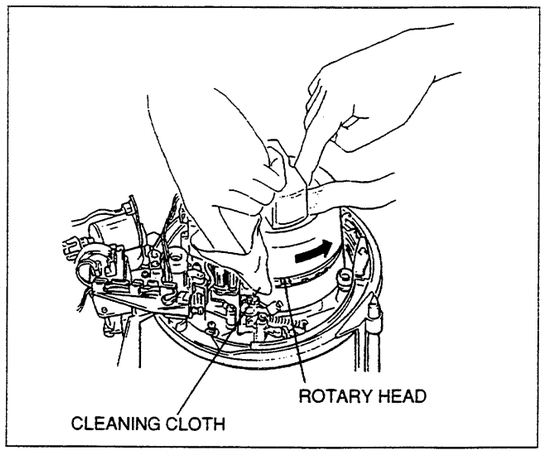

Cleaning by Cleaning Cloth

1-12. HOW TO START THE FUNCTIONS EXPANDED BY THE SETUP MENU SETTING

1-12-1. How to Start the Internal Video SG

1. Select the signal you wish to output in Setup Menu "ITEM 710: INTERNAL SIGNAL GENERATOR".
2. When the VIDEO INPUT SELECT button on the upper control panel that lights currently is continuously pressed for more than three seconds, a video input signal is switched to the internal video SG. (When the internal video SG is started, all the VIDEO INPUT SELECT buttons light.)
3. To cancel the internal video SG, perform step (a) or (b) below.
   (a) Press one of the VIDEO INPUT SELECT buttons.
   (b) Change the setting of Setup Menu "ITEM 710: INTERNAL SIGNAL GENERATOR" to "DATA NO.00: OFF". And simultaneously, a video input signal is switched to the signal that has been selected before the internal video SG is started.

1-12-2. How to Start the Internal Audio SG

1. Select the signal you wish to output in Setup Menu "ITEM 808: INTERNAL AUDIO SIGNAL GENERATOR".
2. Press the INPUT SELECT button on the upper control panel to turn it lighted (to enter the AUDIO INPUT SELECT mode).
3. When one of the CH1 AUDIO INPUT SELECT buttons (SIF, AES/EBU L, ANALOG R) is continuously pressed for more than three seconds, the digital audio input signals in all channels are switched to the internal audio SG. (When the internal audio SG is started, the AUDIO INPUT SELECT buttons in all channels light.)

   Even if the unit is put into the MONITOR SELECT mode (the MONITOR SELECT button is pressed to turned lighted) during internal audio SG start, the INPUT SELECT button continues lighting.
   (The unit is put into the MONITOR SELECT mode if the MONITOR SELECT button is pressed when the internal audio SG is not started. At that time, the MONITOR SELECT button lights and the INPUT SELECT button goes off.)
4. To cancel the internal audio SG, perform step (a) or (b) below.
   (a) Press one of the CH1 to CH4 AUDIO INPUT SELECT buttons on the lower control panel in INPUT SELECT mode (Press the INPUT SELECT button so that the MONITOR SELECT button goes off.).
   And simultaneously, an audio input signal is switched to the signal according to the selected button at this time.
   (b) Change the setting of Setup Menu "ITEM 808: INTERNAL AUDIO SIGNAL GENERATOR" to "DATA NO.00: OFF". And simultaneously, an audio input signal is switched to the signal that has been selected before the internal audio SG is started.

1-12-3. How to Start the System E-E Mode

NOTE
While the REC INHIBIT lamp is lighted on the lower control panel, the system E-E mode can not be started.

1. Select the signal path when the system E-E function is valid in setup menu "ITEM 902: SYSTEM EE MODE".
2. Press the STOP button on the lower control panel.
3. The system E-E mode is valid only when the DELETE and REC buttons are pressed on the lower control panel at the same time. (If the DELETE and REC buttons are released, the unit enters the normal E-E mode with the REC button lighted.
4. To cancel the system E-E mode, change setting of setup menu "ITEM –902: SYSTEM EE MODE" to "DATA No. 0: off".

1-13. FIXTURE AND MEASURING EQUIPMENT FOR ADJUSTMENT

1-13-1. Fixture

Fig. No.	Part No.	Description	Inscription No.	For use
1	J-6001-820-A	Drum Eccentricity Gauge (3)	———	Inner drum eccentricity adjustment
2	J-6001-830-A	Drum Eccentricity Gauge (2)	———	
3	J-6001-840-A or J-6325-530-A	Drum Eccentricity Gauge (1) or Drum Eccentricity Gauge (6)	———	
4	J-6087-000-A	Drum Eccentricity Gauge (5)	———	
5	J-6324-030-A	Drum Eccentricity Gauge (7)	MW-403	
6	J-6035-070-A	Extraction Tool (for PLCC socket)	———	Extraction of IC (PLCC type)
7	J-6080-029-A	Small Dental Mirror (Round type ø12)	———	Cassette pillar height adjustment
8	J-6086-570-A	Reference Flat Plate	SL-657	Audio/TC head zenith adjustment
9	J-6152-450-A	Wire Clearance Check Gauge Set	———	Clearance check
10	J-6251-090-A	Torque screwdriver's hexagonal bit (d=2.5 mm, l=120 mm)	———	Tightening screws to fix a drum assembly and inner drum assembly
	J-6323-440-A	Torque screwdriver's hexagonal bit (d=0.89 mm, l=50 mm)	———	Tightening screws to fix a tension regulator roller
	J-6323-500-A	Torque screwdriver's hexagonal bit (d=2 mm, l=75 mm)	———	Tightening screws to fix a reel FG sensor
11	J-6323-420-A	Torque screwdriver's bit (+ 2 mm, l=75 mm)		Tightening screws to fix a brush/slip ring assembly
	J-6323-430-A	Torque screwdriver's bit (+ 3 mm, l=90 mm)		Tightening screws to fix a reel motor assembly or a ring roller
12	J-6252-510-A	Torque screwdriver (6 kg•cm)	JB-5251	Tightening screws
	J-6252-520-A	Torque screwdriver (12 kg•cm)	JB-5252	Tightening screws
13	J-6269-800-A	Extension Board (L), EX-365	———	Large-sized printed circuit board for check and adjustment
14	J-6269-810-A	Extension Board (S), EX-377	———	Small-sized printed circuit board for check and adjustment
15	J-6320-870-A	Reel Motor Shaft Slantness Check Fixture	MW-087	Reel motor shaft slantness adjustment
16	J-6320-880-A	Cassette Reference Plate (L)	MW-088	Reel table height adjustment, Reel motor shaft slantness adjustment
17	J-6322-610-A	Tape Guide Adjustment Driver	MW-261	Tape path alignment
18	J-6329-350-A	Reel Table Height Gauge	MW-935	Reel table height adjustment
19	J-6332-240-A	VISC Phase Adjusting Jig	———	VISC Alignment
20	J-6420-320-A	Extension Cable Set	———	Extension of the switching regulator
21	1-952-684-11	Extension Cable (14 P)	———	Repair of the TBC-23/24 boards
22	3-184-527-01	Cleaning Cloth (15 cm × 15 cm)	———	Cleaning

Fig. No.	Part No.	Description	Inscription No.	For use
23	7-432-114-11	Locking Compound 200 g	———	Inhibits loosening of screws.
24	7-661-018-18	Diamond Oil NT-68 50 ml		
25	7-651-000-10	Sony Grease (SGL-601) 50 g	———	
	7-651-000-59	Grease (PG-662)	———	
26	7-700-736-01	L-shaped Hexagonal Wrench (d=1.27 mm)	———	
	7-700-736-05	L-shaped Hexagonal Wrench (d=1.5 mm)	———	
	7-700-736-06	L-shaped Hexagonal Wrench (d=0.9 mm)	———	
27	7-700-766-04	Hexagonal Wrench Driver (d=2.5 mm)	———	
28	8-960-073-51	Alignment Tape, ZR5-1P	———	Digital Video and Audio alignments
	8-960-073-61	Alignment Tape, ZR2-1P	———	Tracking adjustments (for digital)
29	8-960-096-91	Alignment Tape, CR5-1B PS (metal particle tape)	———	Analog Video alignments (DVW-A500P/A510P only)
	8-960-096-86	Alignment Tape, CR8-1B PS (metal particle tape)	———	Analog Audio alignments (DVW-A500P/A510P only)
	8-960-098-44	Alignment Tape, CR5-2A PS (oxide tape)	———	Analog Video alignments (DVW-A500P/A510P only)
	8-960-098-45	Alignment Tape, CR8-1A PS (oxide tape)	———	Analog Audio alignments (DVW-A500P/A510P only)
30	9-911-053-00	Thickness Gauge	———	Clearance check
31	9-919-573-01	Cleaning Liquid	———	Cleaning
32	J-6530-760-A	TG-0 Adjustment Fixture	DF-076	TG-0 Adjustment
33	J-7032-740-B	Tension Measurement Jig	PG-274	Tape tension adjustment

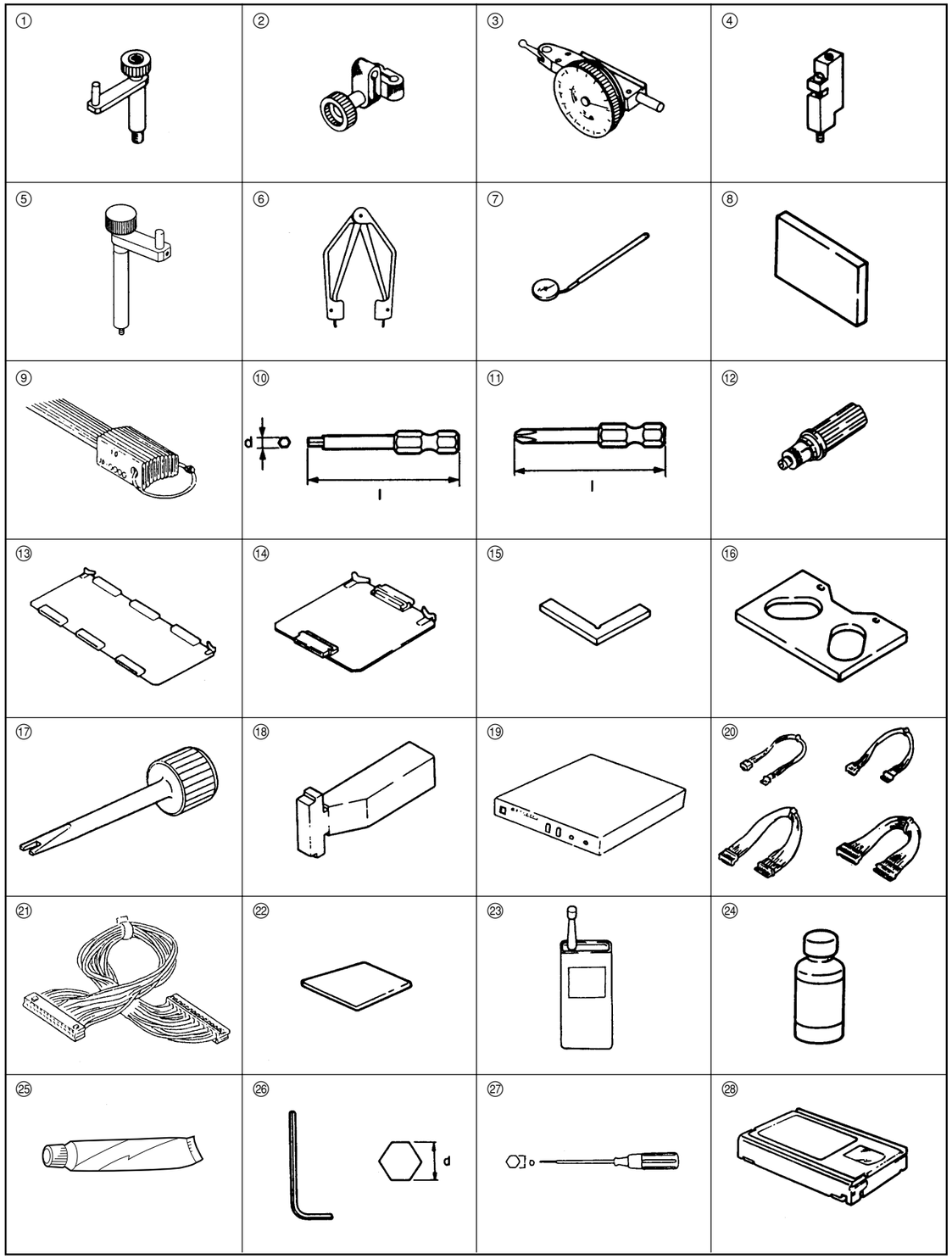
①
②
③
④
⑤
⑥
⑦
⑧
⑨
⑩
d
l
⑪
l
⑫
⑬
⑭
⑮
⑯
⑰
⑱
⑲
⑳
㉑
㉒
㉓
㉔
㉕
㉖
d
㉗
㉘

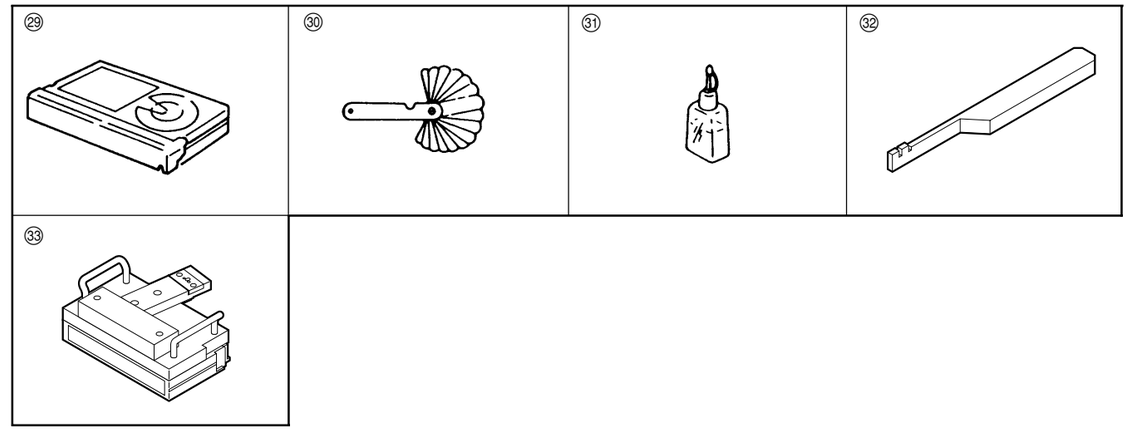
㉙
㉚
㉛
㉜
㉝

1-13-2. MEASURING EQUIPMENT

It is recommended to use the measuring equipments listed below or the equivalents.
Each equipment is available as a standard product.

Equipment	Model Name	Remarks
Analog Composite Signal Generator	SONY TEKTRONIX 1411	for VPR-1 board alignment
	SONY TEKTRONIX TSG-271A	
Analog Component Signal Generator	SONY TEKTRONIX TSG-300 or TSG-371	for generating SMPTE/EBU format analog signals
Digital Component Signal Generator	SONY TEKTRONIX TSG-422(OP.1S)	for generating 4:2:2 format digital signals
Spectrum Analyzer	ADVANTEST R3261A	with external trigger function bandwidth: more than 100 MHz
Oscilloscope	SONY TEKTRONIX 2465B	
Component/Composite Wave Form Monitor	SONY TEKTRONIX WFM 300A	for measuring video levels
Wave Form/Vector Monitor	SONY TEKTRONIX 1751 or 1781R	for measuring analog composite SCH
Audio Level Meter	HEWLETT PACKARD HP3400A	
Audio Analyzer	SONY TEKTRONIX AA501A(OP.02)	for measuring distortion and levels
Audio Generator	SONY TEKTRONIX SG505(OP.02)	
Frequency Counter	ADVANTEST TR5821AK	
Digital Voltmeter	ADVANTEST TR6845	
Monitor with Serial Digital Input	SONY BVM-1410 (with optional accessoy BKM-2085-14)	
Network Analyzer	ANRITSU MS-420B	
DA Converter Board (D-1)	SONY BKPF-102CA	for VPR-1 board alignment
Digital Video Interface Unit	SONY PFV-D50/D100/D200	for VPR-1 board alignment

1-14. ERROR LOGGER FUNCTION

- CH COND RED (Channel Condition Red)
  When the red CHANNEL CONDITION Lamp on the upper control panel lights;
- REF ALARM (Reference Alarm)
  When a reference signal is missing (no signal is input to the INPUT REF VIDEO terminal) or a REF video input signal is not synchronized with the input video signal;
- TAPE EJECT
  When the cassette tape is ejected;
  (If no error is occured from when the cassette tape was ejected last time until it is ejected this time, the preceding time code is overwritten by this time code.)
- ERROR-xx
  When a trouble is detected;
  (The corresponding error code is recorded.)

When any one of the conditions mentioned above occurs, the corresponding message and time code are stored. After the power switch is turned on, the error logger function always monitors the unit to detect the errors. The contents of these data items can be read and checked in the form of a list.

Error Logger Screen

To enter the error logger screen, press the MENU button while pressing and holding the ENTRY button on the lower control panel.
The error logger data is superimposed on the monitor screen (output to the VIDEO OUTPUT COMPOSITE 3 connector or
SERIAL V/A OUTPUT 4 connector). Moreover, the time counter on the lower control panel displays the error logger data by only
the number of storage error times.
A maximum of 99 error data items can be stored. To display the error data items that are not displayed on the screen, turn the
search dial to scroll up them. When 99 data items are exceeded, the old data is erased and the data sequence is advanced.
To exit the error logger screen, press the MENU button on the lower control panel.

Monitor Screen

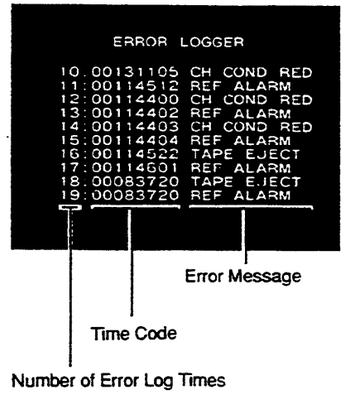

Time counter display

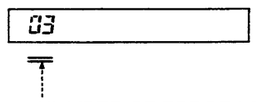

Tape Operation during Error Logger Screen Display

With the error logger screen displayed, press the SET button on the lower control panel to display a block sign on the monitor
screen. This enables the tape operation.
To return to the error logger screen, press the MENU button on the lower control panel.

Block-Sign
Monitor Screen

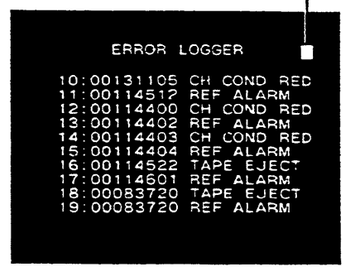

Error Logger Data Erasure

To erase the error logger data, press the RESET button on the lower control panel in the error logger screen display.

1-15. SAFETY CHECK-OUT

After correcting the original service problem, perform the following safety checks before releasing the unit to the customer:

Check the metal trim, "metallized" knobs, screws, and all other exposed metal parts for AC leakage. Check leakage as described below.

LEAKAGE TEST

AC leakage from any exposed metal part to earth ground and from all exposed metal parts to any exposed metal part having a return to chassis must not exceed 3.5 mA. Leakage current can be measured by any one of three methods.

(1) A commercial leakage tester, such as the Simpson 229 or RCA WT-540A. Follow the manufacturers' instructions to use these instruments.

(2) A battery-operated AC milliammeter. The Data Precision 245 digital multimeter is suitable for this job.

(3) Measuring the voltage drop across a resistor by means of a VOM or battery-operated AC voltmeter. The "limit" indication is 5.25V; therefore, analog meters must have an accurate low-voltage scale. The Simpson 250 and Sanwa SH-63Trd are examples of a passive VOM that is suitable. Nearly all battery operated digital multimeters that have a 20V AC range are suitable. (Refer to Fig. A)

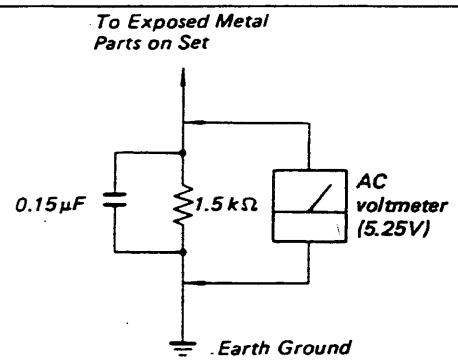

Fig. A. Using an AC voltmeter to check AC leakage.

SECTION 2
RECORDING FORMAT, HEAD CONFIGURATION, AND SIGNAL PROCESSING

2-1. OUTLINE

This Sony DVW series VTR is a 1/2-inch component digital VTR which uses a new "Digital Betacam" format.
This "Digital Betacam" format has been developed as the digital version of the analog Betacam format that has been now accepted as a standard in the broadcasting, production, and Electronic News Gathering (ENG) fields of the world.
That is, the Digital Betacam VTR can perform high-performance digital recording and playback while keeping the playback compatibility of the conventional analog Betacam tape, and has almost the same operation performance as in the conventional analog Betacam VTR.

To perform such a workhorse VTR, a new bit rate reduction format (i.e., coefficient recording) has been developed. The data rate is compressed into approximately 1/2, and compressed data is recorded on tape. Moreover, the introduction of a high-performance, high-precision heads and drum, and a new automatic tracking system has enabled a drastic reduction of the width of the recording track.
As the result, the Digital Betacam VTR is able to use the same size 1/2-inch Digital Betacam cassette (S and L) as in the conventional Betacam cassette. The L cassette makes continuous recording of more than 120 minutes possible.

In the DVW-A500P, the analog tape (metal and oxide) recorded based on the Betacam/Betacam SP format can also be played back. Therefore, currently-owned Betacam recorded tapes can also be used directly. Furthermore, an analog Betacam SP VTR (especially Camcorder) can also be jointly used in the Digital Betacam system.

2-2. RECORDING FORMAT

2-2-1. Tape Pattern

Fig. 2-2-1 shows the tape pattern in the 625/50 system. To explain the operation of the recorder (DVW-A500P) with a Betacam playback function, this figure shows the tape pattern of the Digital Betacam format at right, and the tape pattern of the Betacam SP format at left together.

In the Digital Betacam format, one-field video data is recorded on six helical tracks (program tracks). In other words, since one-field data is recorded while the drum rotates by 1.5, the number of drum rotations is 75 per second. In the Betacam SP format, since one-field data is recorded while the drum rotates by 1/2, the number of drum rotations is 25 per second. As shown in the figure, the tape speed of the Digital Betacam format is lower about 5% than that of the Betacam SP format.
The DVW-A500P detects whether the cassette tape to be played back is based on the Digital Betacam format or the analog Betacam format, by the ID hole of the cassette, and switches the control mode automatically. As the result, the tape is played back at the same drum rotation and tape speed as when it is recorded, and parameters are set so that the optimum tracking is obtained.

The drum diameter of the Digital Betacam VTR is larger about 9% than that of the Betacam SP VTR. Since the relative speed of the head to tape increases proportionally to the drum diameter even if the drum rotation is made same, the signal recorded on the helical track of the Betacam SP tape is played back as time-compressed signal about 9%. In other words, the frequency of the played back RF signal increases. However, the RF signal is processed by a signal processing circuit in the later stage so that it can obtain the same performance as before.

The tape pattern of the Digital Betacam format has three longitudinal tracks (i.e., control track, time code track, and cue audio track). These tracks coincide with the tape pattern of the Betacam SP format. Therefore, the longitudinal tracks of the Betacam SP tape can be played back by the stationary heads of the Digital Betacam VTR. In the Betacam SP format, however, the fourth longitudinal track that records an audio CH1 signal is provided in parallel. The VTR with a Betacam playback function thus has a two-channel audio head.

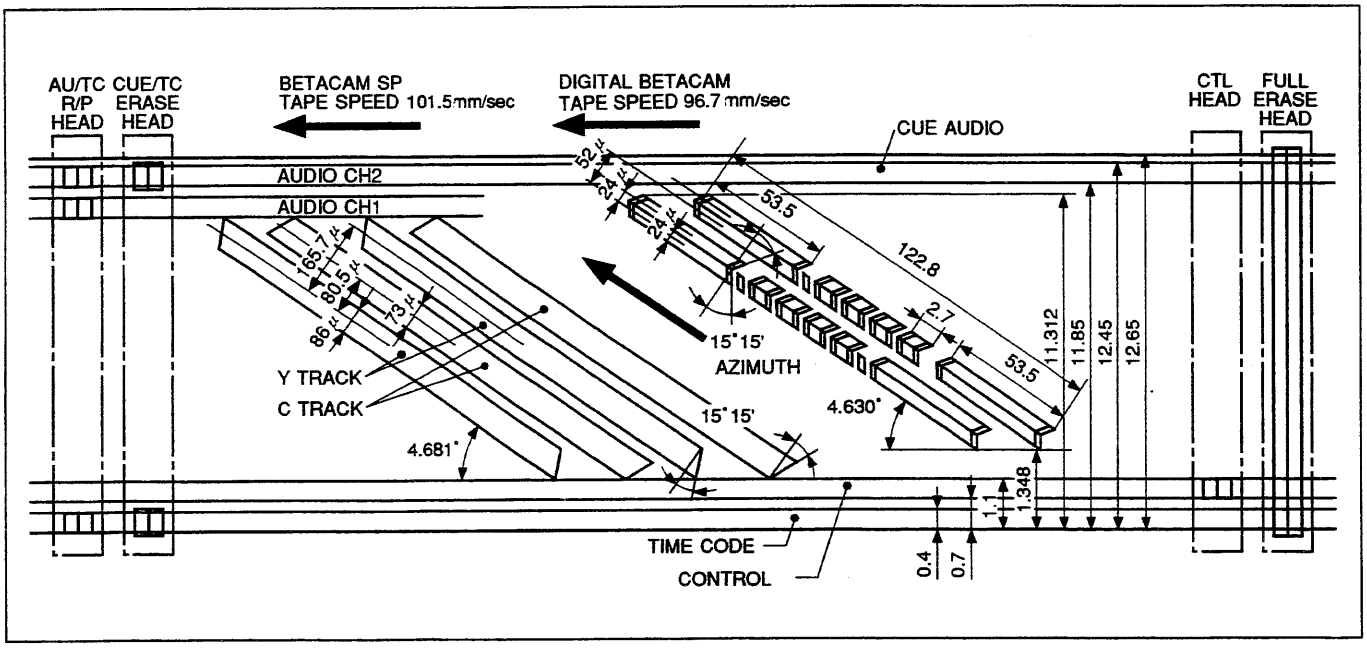

Fig. 2-2-1. Tape Pattern (625/50)

2-2-2. Data Arrangement on Program Tracks

Fig. 2-2-2 shows the arrangement of data recorded on helical tracks (program tracks). The size of each section in the figure is not the actual dimension ratio. For more information on the size, refer to Fig. 2-2-1.
The Digital Betacam format uses an azimuth recording system to perform high-density recording. Namely, two heads with an azimuth angle of approximately 15 degrees in the opposite direction to each other are paired to record two program tracks (track 0 and 1) while the drum rotates by 1/2. One-field video data and audio data are recorded on six program tracks. Fig. 2-2-2 shows the arrangement of one-frame data. Field 1 data is recorded on the first-half six tracks, and field 2 data is recorded on the latter-half six tracks.
Each program track is constructed to have four audio sectors in the center and to have two video sectors beyond the tracking pilot signals put before and behind the audio sectors. In other words, one-field video data is dispersed into twelve video sectors for recording, and four-channel audio data is dispersed into six audio sectors for recording for every channel. As shown in Fig. 2-2-2, each channel for the audio sectors is arranged so that the danger of error generation disperses.

To identify the beginning and end of a sector, preamble and postamble data are added before and behind all the sectors. Also, edit gaps are installed between the sectors so that each channel can be edited independently.
Tracking pilot signals are used in an automatic tracking system that secures high-speed and high-precision tracking during editing.

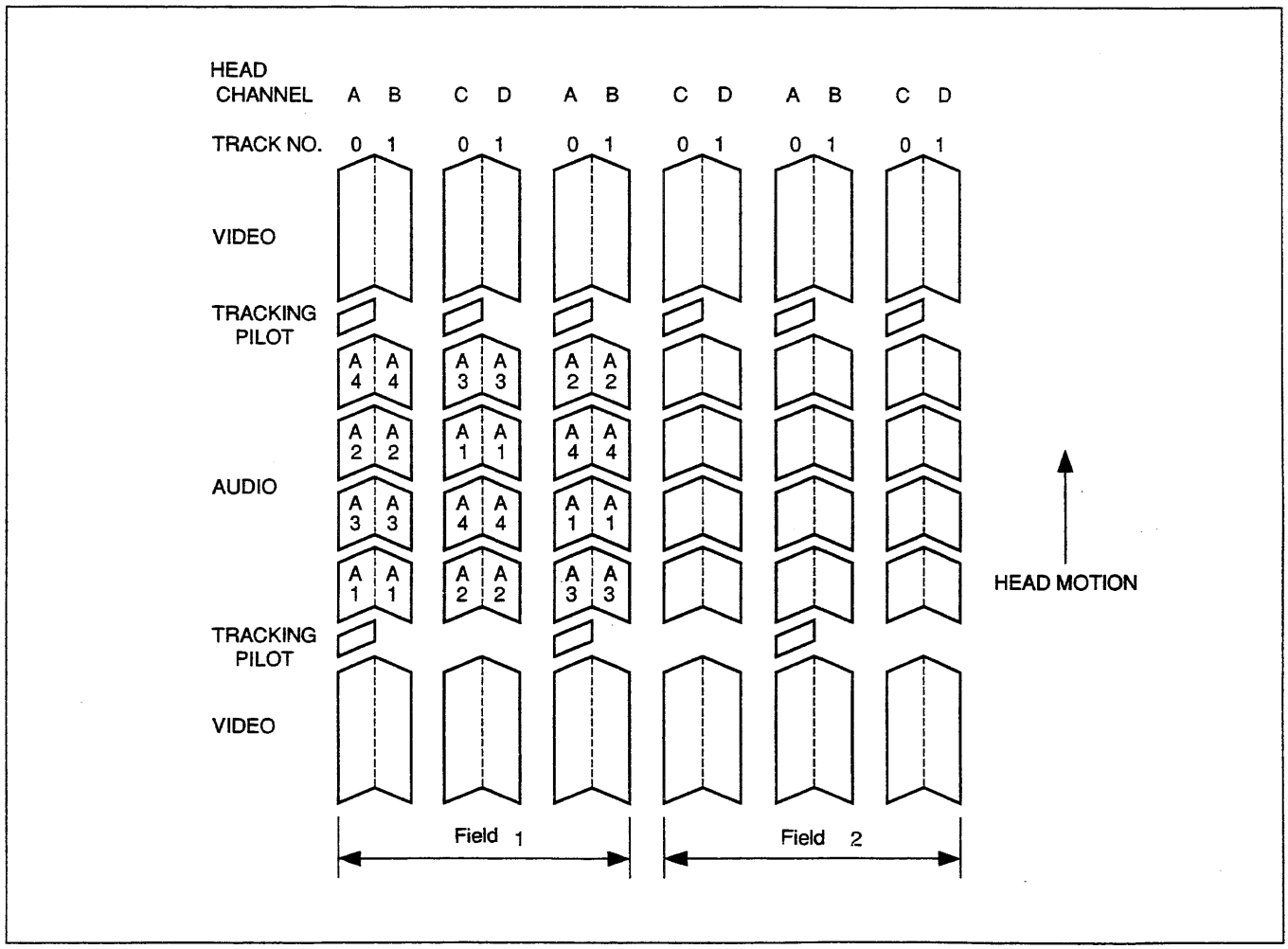

Fig. 2-2-2. Data Arrangement on Program Tracks

2-2-3. Longitudinal Tracks

As shown in Fig. 2-2-1, a control track, time code track, and cue audio track are provided in the longitudinal direction of the tape.

Fig. 2-2-3 shows the CTL signal and time code signal in the 625/50 system, and the timing relationship between these signals and video reference signals.

The CTL signal is recorded by a 50-Hz rectangular pulse in the 625/50 system and controls the start timing of each field data at the rising edge of the pulse. The CTL signal is also modulated the duty cycle of the rectangular wave to 65 : 35 in the first field of a color frame and modulated it to 35 : 65 in the fifth field so as to identify the field number and control the color framing.

The time code signal uses a conventional longitudinal time code based on the EBU standard. One frame consists of 80 bits. Frame number, second, minute, hour, and sync word data items are coded by a biphase mark coding method and recorded for every frame. A user bit is written in the time data as a binary group.

The cue audio signal is recorded by an ordinary AC bias method.

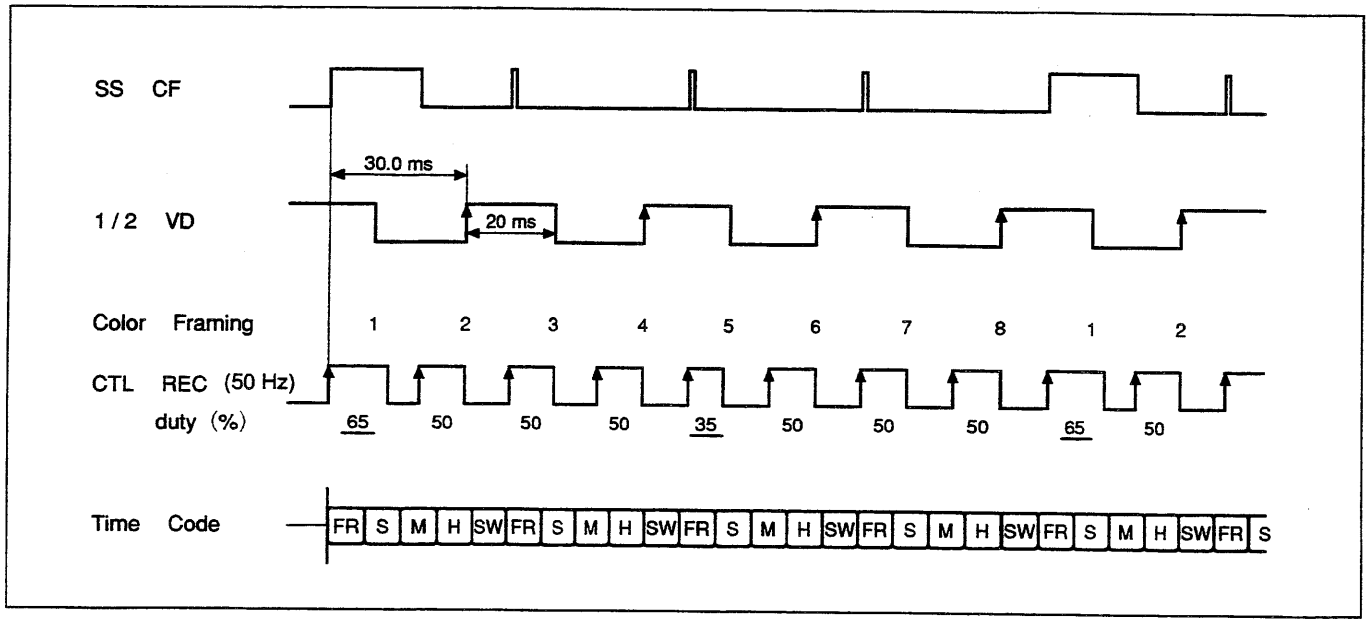

Fig. 2-2-3. Digital Betacam Timing Chart (625/50)

2-3. HEAD CONFIGURATION

Fig. 2-3-1 shows the arrangement of the stationary and rotary heads in the DVW-A500P, and its top view. However, the rotary heads can be actually viewed only their tips from the side of the drum.
In the illustration that shows the rotary heads, ADVANCE heads and Y/C heads installed in pairs on the square plates like the bimorph plates are dynamic tracking heads. These heads are used to play back a digital tape and an analog tape respectively. Therefore, the model (DVW-500P for a recorder) without a Betacam playback function has no Y/C heads.

Both ADVANCE heads and CONFIDENCE heads are used to play back a digital tape. In usual PB mode, the ADVANCE heads are used to play back. In the REC and INSERT modes, the ADVANCE heads play back the signal before erasure as preread, and the CONFIDENCE heads play back a recorded signal to confirm that the signal has been recorded. For that purpose, the ADVANCE heads and the CONFIDENCE heads are installed in the specified height on the rotary drum so that they can trace the before track and after track respectively toward the REC head.

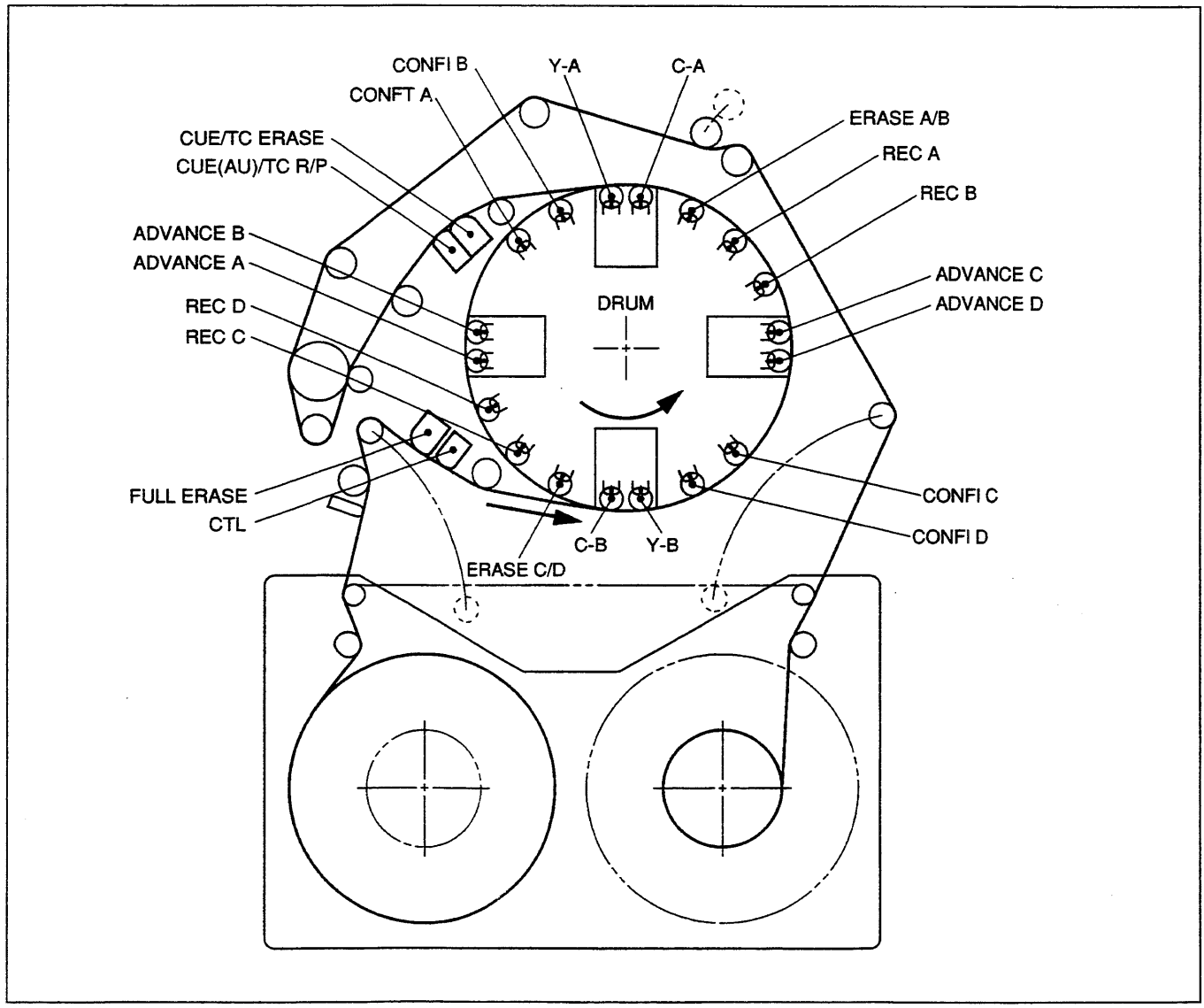

Fig. 2-3-1. Arrangement of Stationary and Rotary Heads (DVW-A500P)

2-4. SIGNAL PROCESSING

2-4-1. Outline of the Digital Interface Format

The interface of the Sony Digital Betacam VTR is based on the component serial digital interface format EBU Tech 3267/ CCIR-656 Part III. The digital audio interface is based on the AES/EBU format.

1. Serial video interface

Each data of a digital component video signal and four-channel digital audio signal is serialized and can be transmitted over a long distance of more than 200 m using one coaxial cable. The transmission rate is 270M bits per second.
This serial interface uses an S-NRZI (Scrambled Non-return to Zero Inversion) channel code system for digital data coding. The NRZI transmission has a merit that the contents of data do not change even if a signal is inverted in polarity. Therefore, this system has the advantage that a sprious radiation can be reduced by using the positive/negative polarity simultaneously for serial signal transmission or that the IC can be constituted by a stable, low-power consumption differential amplifier. Scramble processing also enables a clock to be reproduced on the receiving side even if data "0" continues.
Video data is processed in conformity with the CCIR-601 standard. The luminance signal (Y) is sampled in 13.5 MHz, and the color-difference signals (CR and CB) are sampled in 6.75 MHz. The luminance signal and color-difference signals are then multiplexed in the order of "CB, Y, CR, Y, CB, Y, CR, Y, ..." and transmitted at the rate of 27M words per second.
Fig. 2-4-1 shows the relationship between the video signal level and the quantizing level. Fig. 2-4-2 shows the sampling format in a horizontal line, and Fig. 2-4-3 shows the sampling format in a field.
As shown in Fig. 2-4-2, the four-word timing reference signals (TRS) are added before and behind the digital active line. The top TRS signal defines the start of the active line and is called an SAV (Start of Active Video). The last TRS signal defines the end of the active line and is called an EAV (End of Active Video).
Fig. 2-4-4 shows the format of a timing reference signal corresponding to 10 bits. Since the first three words of four words constitute a unique pattern of 3FF, 000, and 000 (HEX), they can be detected as a sync word. For serial transmission, when this sync word is detected, the bit to be sent next is judged to be an LSB, and becomes a reference for converting the serial bits into every 10 bits of parallel words. The forth word (XYZ) defines the field status, and vertical and horizontal blanking timing.

2. Digital audio interface

The digital audio interface is classified into the serial digital interface combined with a video signal and the AES/EBU digital interface employing an XLR connector.
In both interfaces, the digital audio data is based on the AES/ EBU format, and corresponds with 48 kHz sampling and 20-bit linear quantizing. For the serial digital interface, the digital audio data is inserted into an auxiliary data area during horizontal and vertical blanking periods. For the AES/EBU digital interface, two channels of audio data are multiplexed and stored in a data frame for every audio-sampling period. One frame consists of two subframes. The left channel data in the stereo mode enters into subframe A, and the right channel data enters into subframe B.
Fig. 2-4-5 shows the format of frame and subframes. The subframes contains various data items (shown in the figure) as well as audio data and consist of 32 bits.

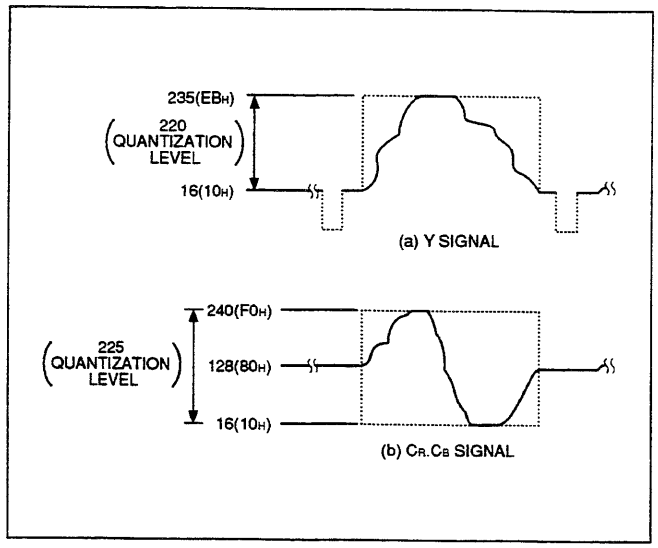

Fig. 2-4-1. Relationship between Video Signal Levels and Quantizing Levels

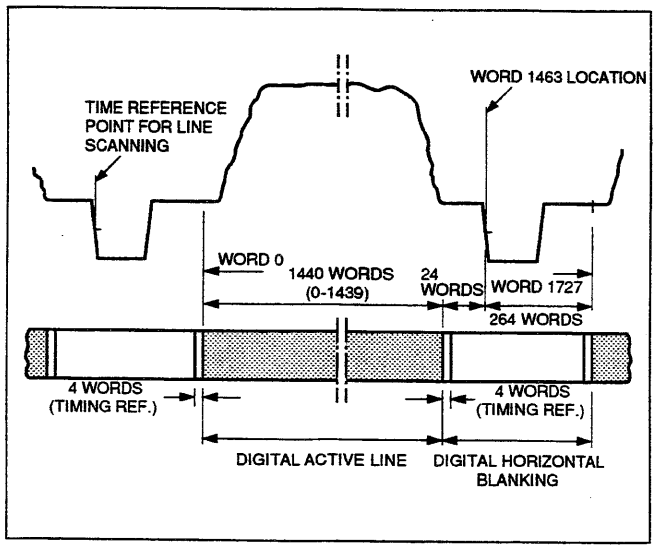

Fig. 2-4-2. Relationship between H Sync and Sampling (625/50)

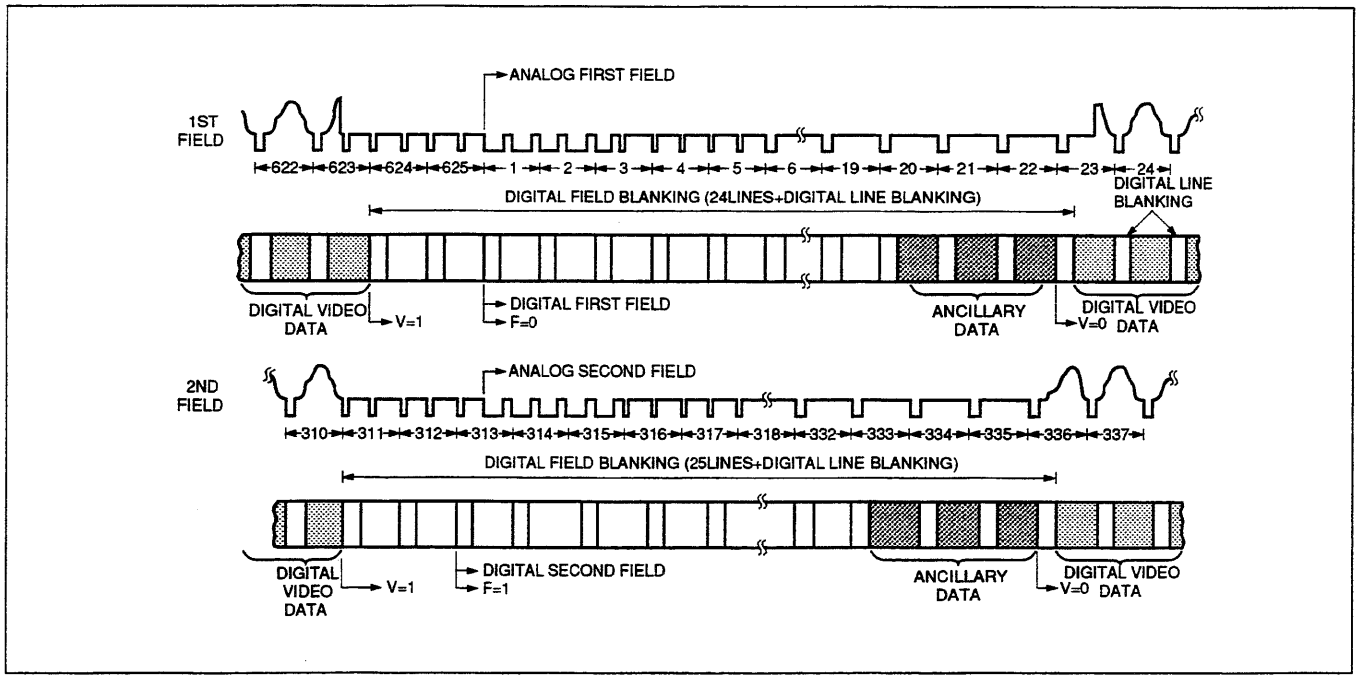

Fig. 2-4-3. Relationship between Analog Video Signal and Digital Field Blanking (625/50)

		PREAMBLE			TIMING REF.	
WORD ADDRESS	EAV	1440	1441	1442	1443	
	SAV	1724	1725	1726	1727	
HEX VALUE		3FF	000	000	(XYZ)	Definition of (XYZ)
B9 (MSB)		1	0	0	1	Always 1 except for TRS
B8		1	0	0	F	0: 1st field 1: 2nd field
B7		1	0	0	V	1: V blanking
B6		1	0	0	H	1: H blanking
B5		1	0	0	P3	Redundant bits used to correct errors occur in F, V and H.
B4		1	0	0	P2	
B3		1	0	0	P1	
B2		1	0	0	P0	
B1		1	0	0	0	Always 0 except for TRS
B0 (LSB)		1	0	0	0	

Fig. 2-4-4. Timing Reference Signal (625/50)

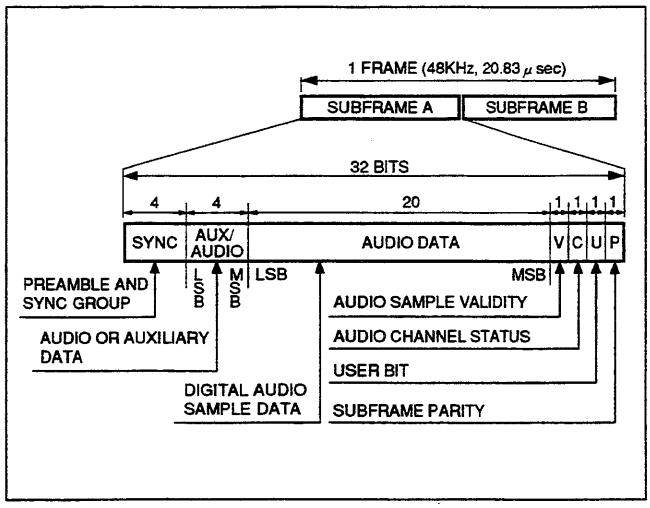

Fig. 2-4-5. Frame and Subframe Formats

2-4-2. Outline of the Digital Signal Processing

The digital signal processing of the Sony Digital Betacam VTR conforms to the D-1 format except that the bit rate reduction processing is added.
Fig. 2-4-6 shows the block diagram of the recording system, and Fig. 2-4-7 shows the block diagram of the playback system.

1. Outline of the recording system

(a) Input interface
For the analog or digital video/audio input signals, the video signal is converted into parallel video data, and the audio signal into serial audio data.

(b) Bit rate reduction encoder
The video data is blocked after it is field-shuffled, then compressed into a data rate of approximate 1/2 according to the newly developed bit rate reduction format.

(c) Audio data processor
The audio data processor performs the audio data selection, gain control, REC verification, and other data processing.

(d) ECC encoder
The ECC encoder performs the error correction coding for error correction in a playback system. The video data that has been sent after bit rate reduction is added the outer error collection code (ECC) and track-interleaved. The audio data sent from the processor is also added the outer ECC and field-shuffled.
Then, the video data and audio data are multiplexed, added the ID data, and inner ECC encoded. Sync data is also added to the resultant data.

(e) REC driver
The REC driver converts parallel REC data into serial data and sends a channel-encoded REC current to the head.

2. Outline of the playback system

In the playback system, signals are processed in the procedure opposite to the recording system.
The audio data error that couldn't be corrected using inner and outer error correction codes is concealed before the audio data is output from an ECC decoder. The video data error that couldn't be corrected is concealed after the video data is returned to the former video data.

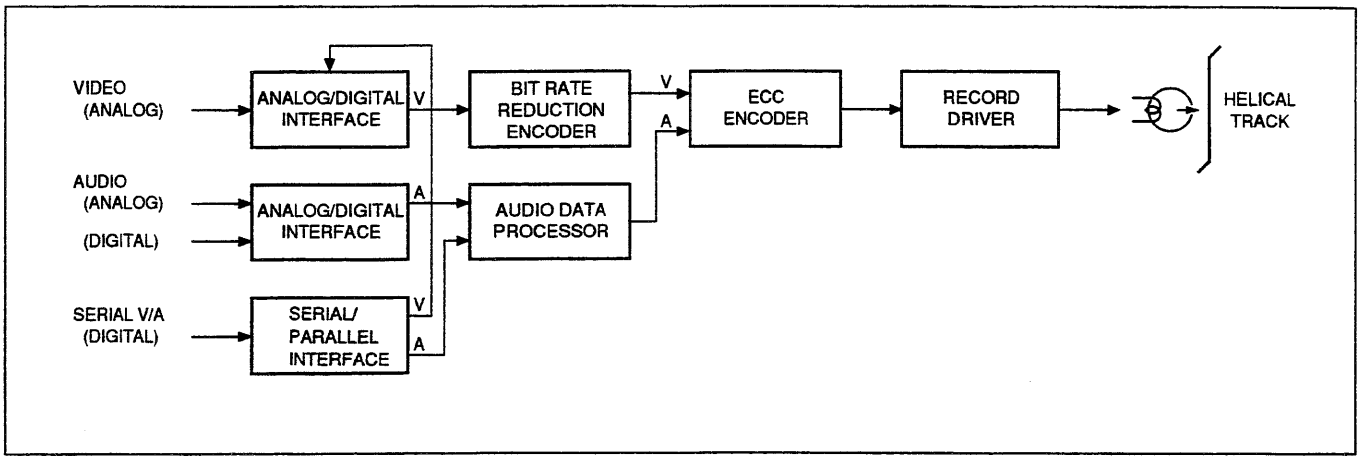

Fig. 2-4-6. Digital Signal Recording System

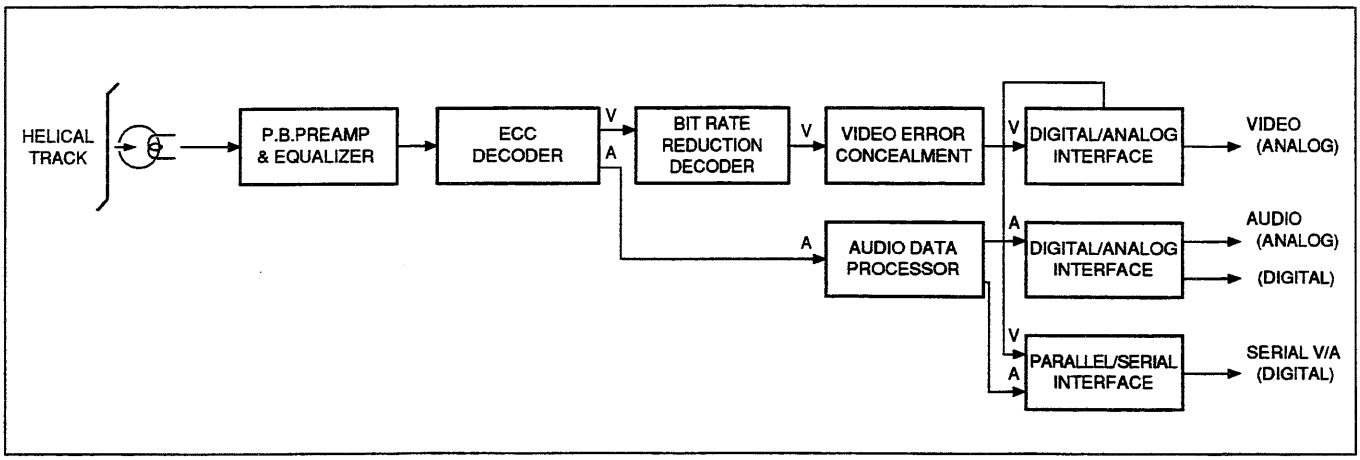

Fig. 2-4-7. Digital Signal Playback System

2-4-3. Error Correction Coding

In the Sony Digital Betacam format, error correction takes place by means of a two-dimensional product code of the inner and outer codes using the Reed-Solomon code.
The structure of the inner code block that constitutes an ECC block is common in video and audio systems. However, the structure of the outer code block differs in video and audio systems. A data block of 180 bytes obtained when sync data is added to one inner code block data is called a sync block, which is the basic unit of a video sector and audio sector. Fig. 2-4-8 shows the structure of the ECC blocks and sync block in the 625/50 system.

One video sector consists of 126 sync blocks. In other words, one video ECC block constitutes one video sector.
Therefore, the two ECC blocks shown in the figure below are recorded on one track, and one field corresponds to 12 ECC blocks.
One audio sector consists of six sync blocks. For the audio data in one channel, one field consists of six sectors (i.e., 36 sync blocks). Therefore, the two ECC blocks shown in the figure correspond to one field in one audio channel.

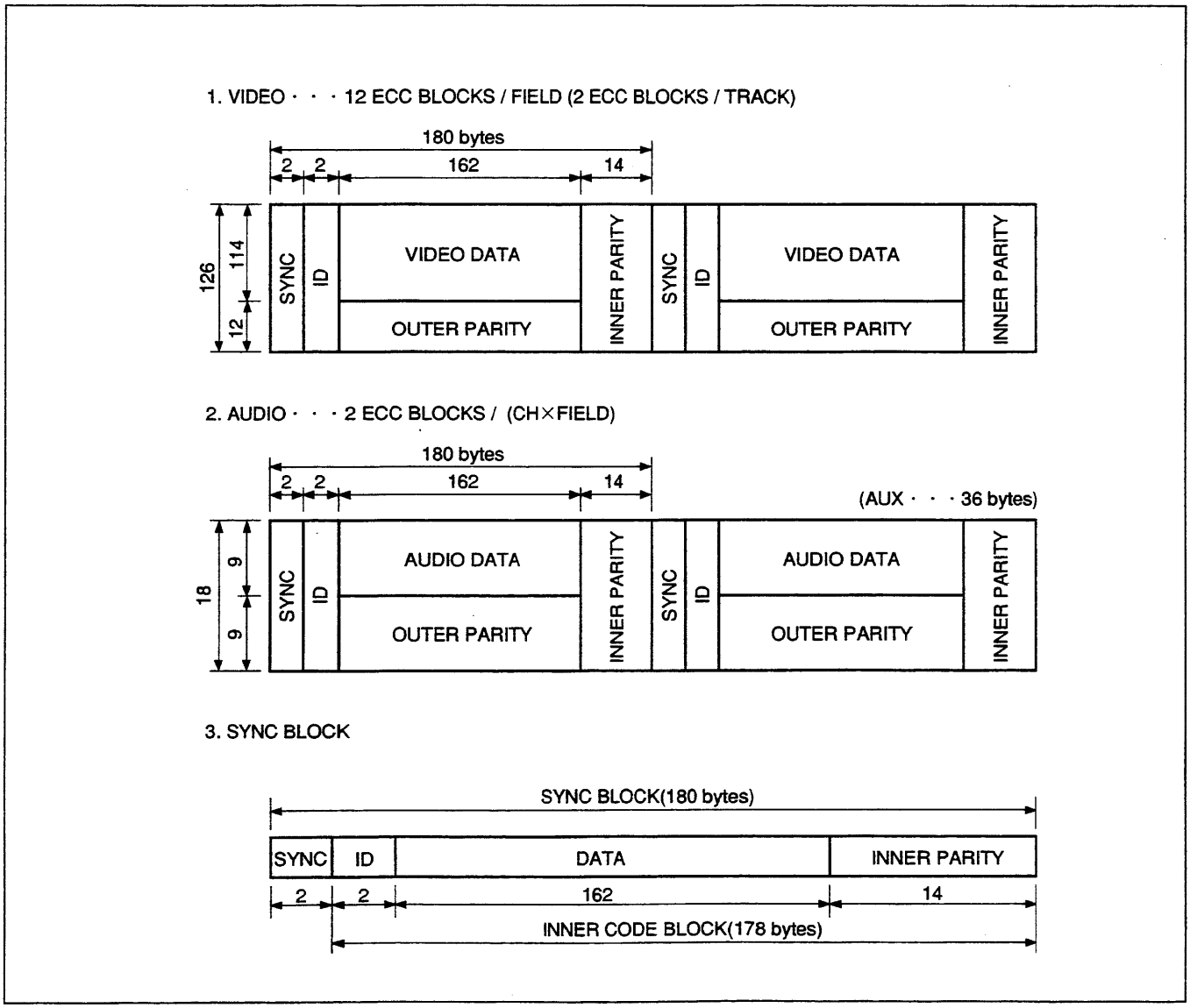

Fig. 2-4-8. Structure of ECC Blocks and Sync Block (625/50)

SECTION 3
BLOCK DIAGRAMS AND CIRCUIT DESCRIPTIONS

CONTENTS OF BLOCK DIAGRAMS

3-1. OVERALL

OVERALL (1/2) : Signal Processing System
OVERALL (2/2) : Control System

3-2. CIRCUIT BLOCK

VPR-1 : Video Processor
APR-1 : Audio Processor
DIF-16 : Serial Digital Interface
DPR-36 : Digital Processor
EQ-45 : RF Processor
CUE-1 : CUE/LTC Processor
DM-89 : Betacam PB Demodulator
TBC-24 : Betacam PB TBC (A/D conversion)
TBC-23 : Betacam PB TBC (Sequence/Reference)
AP-28 : Betacam PB AFM Demodulator
SS-52 (1/3) : System Control
SS-52 (2/3) : Servo Control
SS-52 (3/3) : Dynamic Tracking
DR-307 : Servo Driver
DR-200 : Servo Driver
FUNCTION CONTROL BLOCK
POWER SUPPLY
DEC-65 : Analog Composite Decoder [BKDW-506]

3-3. FRAME

FRAME WIRING (1/3) : Drum/Heads
FRAME WIRING (2/3) : Mecha Deck
FRAME WIRING (3/3) : Front/Rear Panels

CONTENTS OF CIRCUIT DESCRIPTIONS

- CIRCUIT DESCRIPTION OF VPR-1 BOARD
- CIRCUIT DESCRIPTION OF APR-1 BOARD
- CIRCUIT DESCRIPTION OF DIF-16 BOARD
- CIRCUIT DESCRIPTION OF DPR-36 BOARD
- CIRCUIT DESCRIPTION OF EQ-45 BOARD
- CIRCUIT DESCRIPTION OF CUE-1 BOARD
- CIRCUIT DESCRIPTION OF DM-89 BOARD
- CIRCUIT DESCRIPTION OF TBC-24 BOARD
- CIRCUIT DESCRIPTION OF TBC-23 BOARD
- CIRCUIT DESCRIPTION OF AP-28 BOARD
- CIRCUIT DESCRIPTION OF SS-52 BOARD (1/3)
- CIRCUIT DESCRIPTION OF SS-52 BOARD (2/3)
- CIRCUIT DESCRIPTION OF SS-52 BOARD (3/3)
- CIRCUIT DESCRIPTION OF DR-307 BOARD
- CIRCUIT DESCRIPTION OF DR-200 BOARD
- CIRCUIT DESCRIPTION OF DEC-65 BOARD

Note

External connection of each signal is shown by the object board name and the connector-pin number.
If it is shown by “HN” or only connector-pin number, refer to “FRAME WIRING”.

 OVERALL (1/2)

3-1. OVERALL

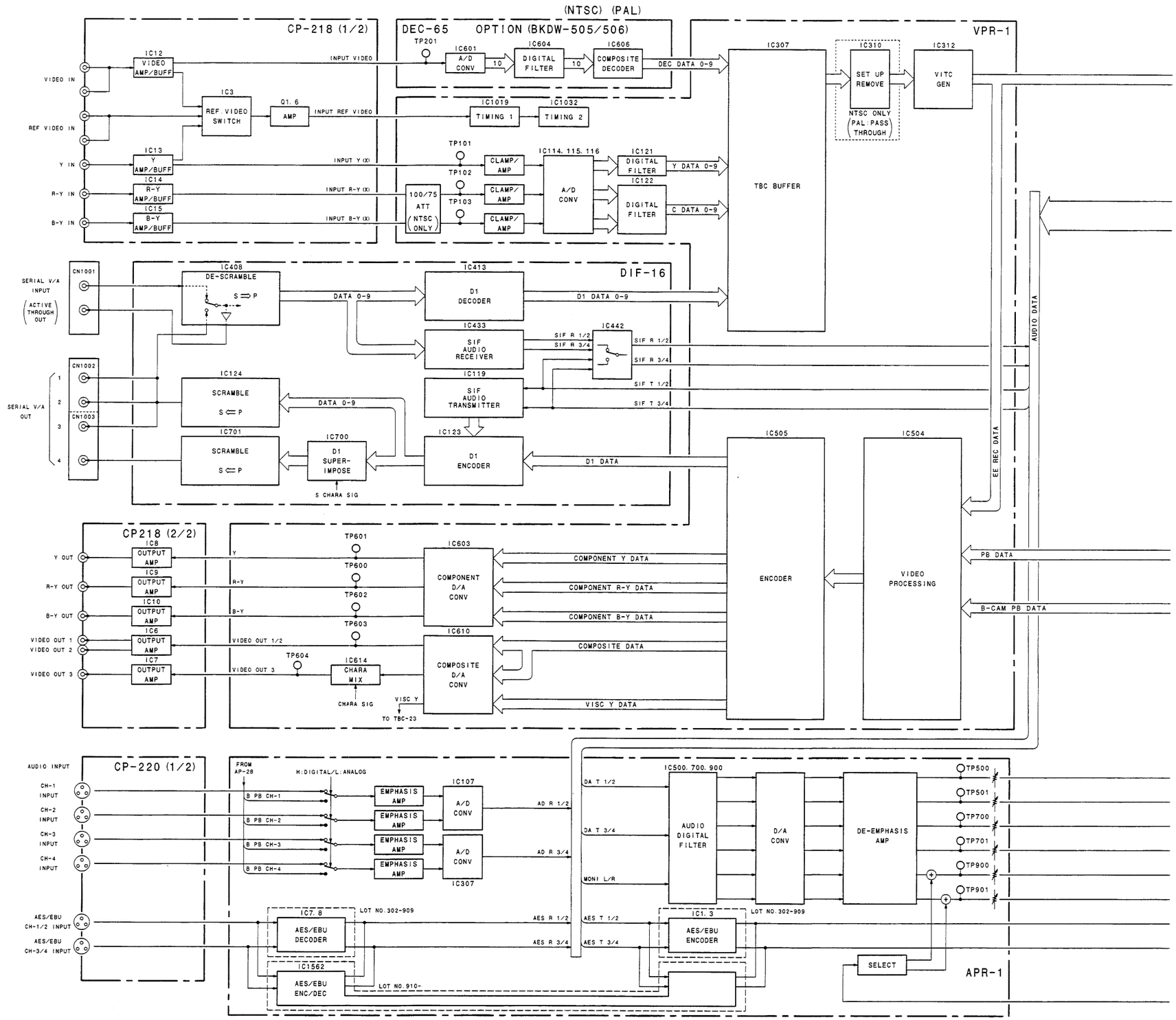

 3-2

 OVERALL (1/2)

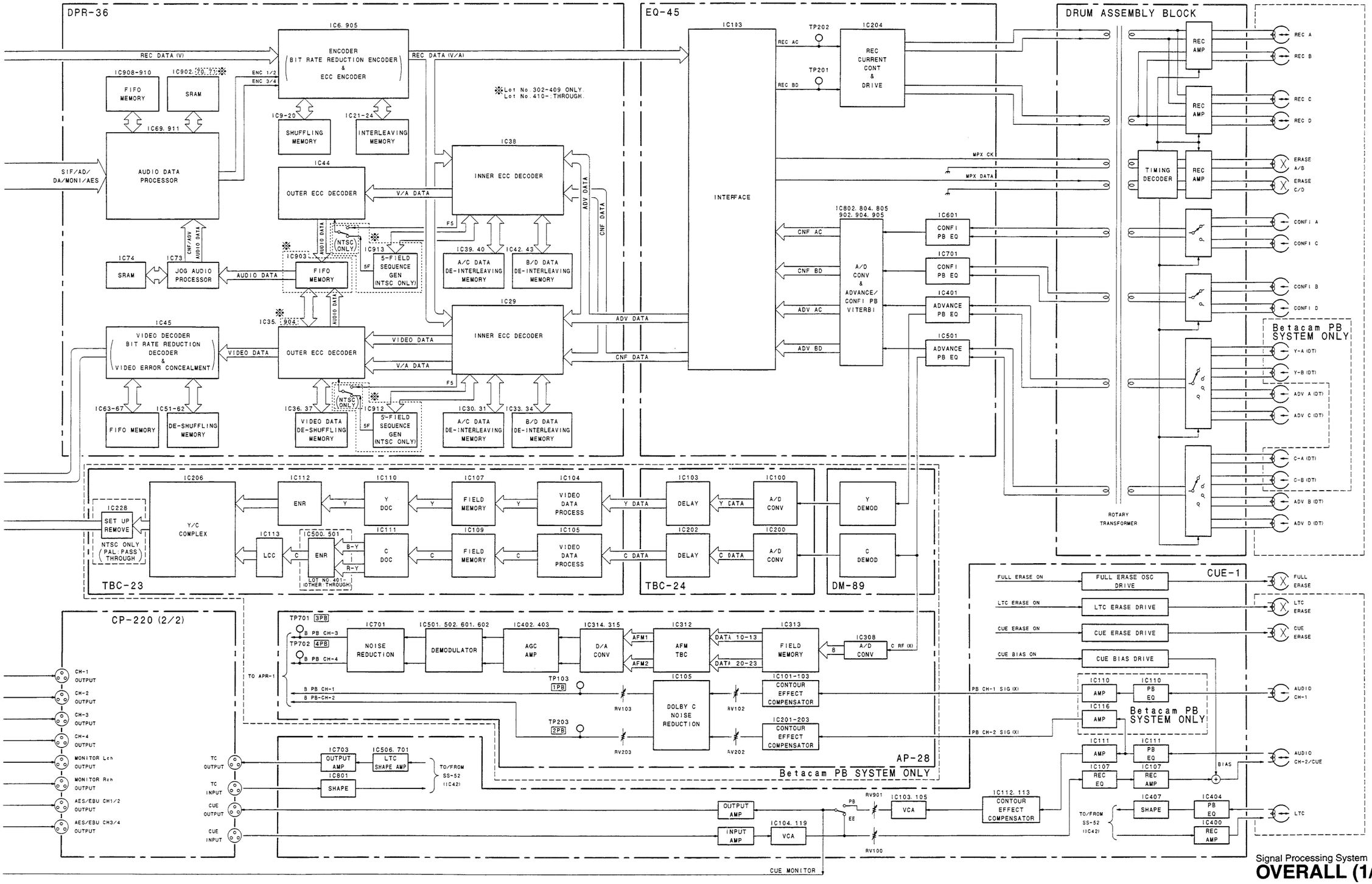

Signal Processing System

OVERALL (1/2)

DVW-A500/500
DVW-A500P/500P

 3-3

 OVERALL (2/2)

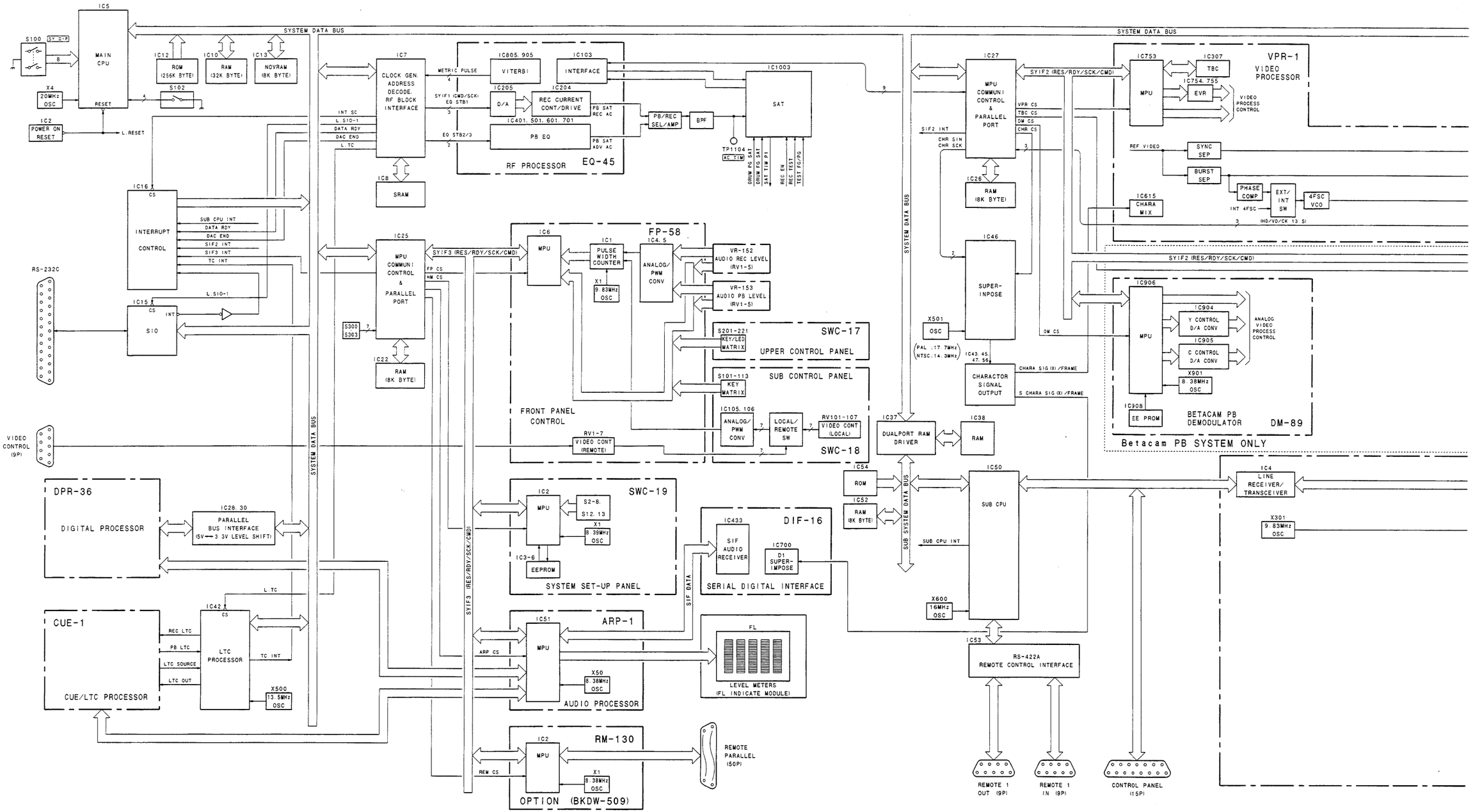

 3-4

 OVERALL (2/2)

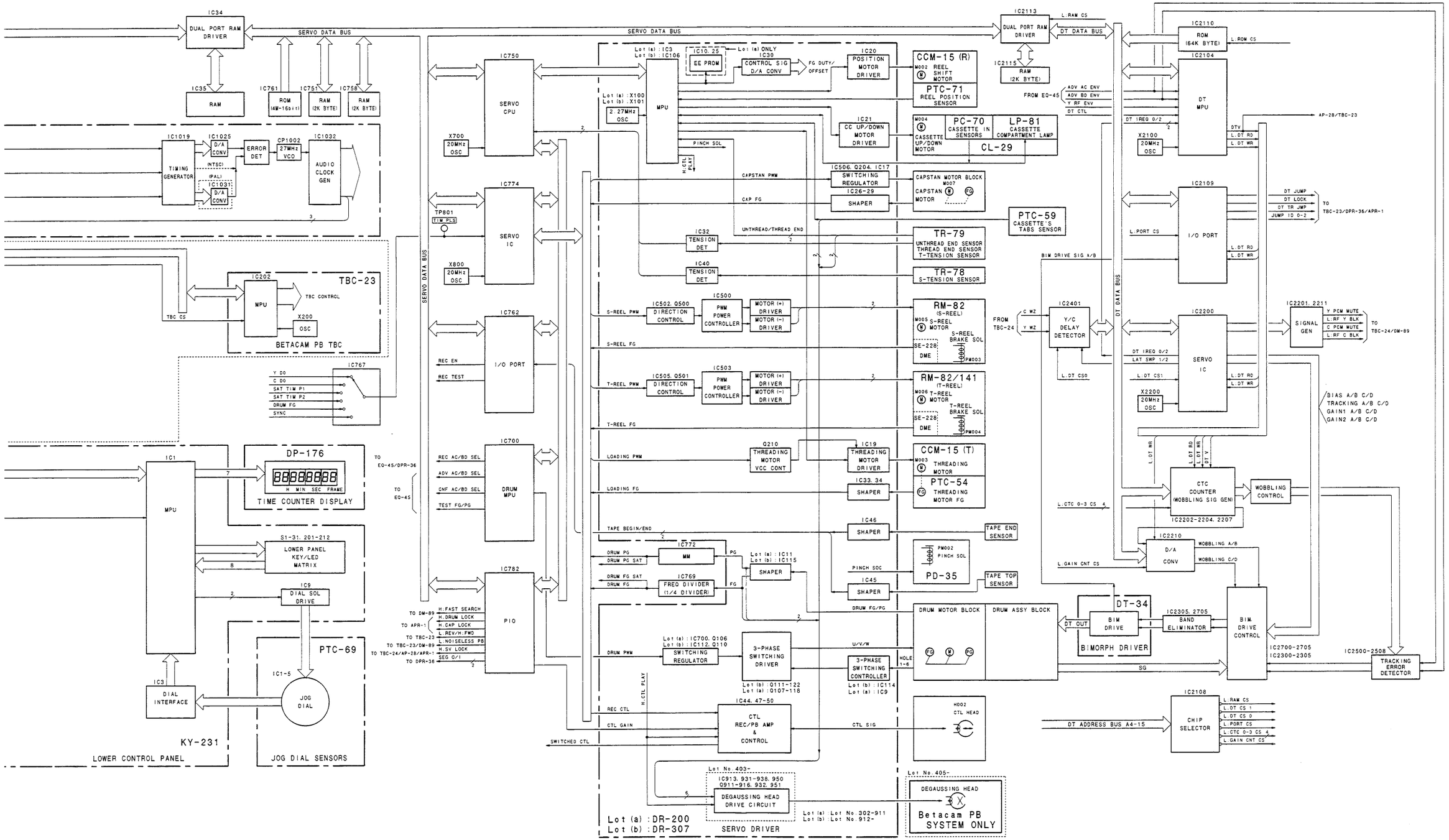

Control System

OVERALL (2/2)

SS-52 Board Circuit to Other Boards
DVW-A500/500
DVW-A500P/500P

 3-5

3-2. CIRCUIT BLOCK

[CIRCUIT DESCRIPTION OF VPR-1 BOARD] (Lot No. 341 or higher)

VPR-1 board is a video processor board that converts the input video signal into digital data, converts the playback digital data into a video signal, and generates timing reference signals for video/audio processing.

The recording process is described below.
For the video input, a component video signal is the standard analog signal, and a Serial V/A signal is the standard digital signal.
An analog composite signal can also be input using the optional “BKDW-505(NTSC)/506(PAL)” (DEC-65 board).
The component video signal is input to VPR-1 board, where Y, R-Y, and B-Y signals are converted each from analog to digital, passed through a digital filter, where converted into 10-bit parallel data, and sent to the TBC IC (IC307).
In this case, the R-Y and B-Y signals are multiplexed in the digital filter and converted into chroma (C) data.
The Serial V/A signal is input to DIF-16 board and separated into video data and audio data.
The video data is decoded and converted into 10-bit parallel data (“D1 DATA 0 through 9”), then input to VPR-1 board and sent to the TBC IC mentioned above.
If DEC-65 board (optional) is used, the input analog composite video signal is decoded on DEC-65 board and converted into 10-bit parallel data (“DEC DATA 0 through 9”), then input to VPR-1 board and sent to the same TBC IC.
The TBC IC clamps the component video input signal, selects a necessary data from these input data, transfers it to the reference clock, multiplexes the Y data and C data, and converts them into 10-bit parallel data.

It also generates various test signals under the control of the MPU (IC753).
The 10-bit parallel data output from the TBC IC is added VITC data in IC312, then sent to DPR-36 board as recording video data (“REC DATA 0 through 9”).
In case that a setup is added to the signal in NTSC system, the data is removed the setup and corrected the level by IC310(NTSC only) in the previous stage of IC312.

Next, the playback process is described below.
The decoded video PB data (“PB DATA 0 through 9”) sent from DPR-36 board is input to the video process IC (IC504).
The TBC-processed Betacam PB data (“B-CAM DATA 0 through 9”) is also sent from TBC-23 board.
The “EE data 0 through 9” that is bypassed from the “REC data” is also input. IC504 selects the input data according to the system mode and sends it to encoder IC (IC505).
The encoder IC converts the input data into various 10-bit parallel data (component Y, R-Y, and B-Y data, composite data, VISC Y data, and D1/D2 data) and outputs them together with the control data and clock signals required for after data processing.
The component Y, R-Y, and B-Y data are converted each from digital to analog so as to produce an analog signal, then output via clamp circuits.
The composite data branches into two paths.
One is converted from digital to analog, clamped, output, and divided on CP-218 board to produce “OUTPUT VIDEO 1 and 2” signals.
The another is converted from digital to analog, superimposed a character signal by the switching of IC514, and output as “OUTPUT VIDEO 3” signal.
The VISC Y data is converted from digital to analog, sent through a low-pass filter to TBC-23 board, and used to adjust the video phase of a Betacam PB signal.
The D1/D2 data is sent directly to DIF-16 board.

Lastly, the control system is described below.
Two systems (video process control circuit and timing reference signal generator circuit) are provided for the control system.
The video process control is performed by the MPU (IC753) under the command (“SYIF2 CMD”) of the serial communication from the main CPU on SS-52 board.
The MPU sends control signals to each main IC on VPR-1 board, and controls each signal level and phase in A/D and D/A conversion systems via EVRs (IC754 and IC755).
For the timing reference signal generation, the timing generator IC (IC1019) controls a PLL circuit to generate a 27MHz reference clock signal according to the sync and burst signals separated from an “INPUT REF VIDEO” signal.
The generated signal is sent to each board as the video process timing reference signal.
Moreover, audio clock generator IC (IC1032), while receiving this signal, generates various reference audio clock signals synchronized with the reference video signal and sends them to each board as the audio process timing reference signal.

[CIRCUIT DESCRIPTION OF VPR-1 BOARD] (Lot No. 302 through 334)

VPR-1 board is a video processor board that converts the input video signal into digital data, converts the playback digital data into a video signal, and generates timing reference signals for video/audio processing.

The recording process is described below.
For the video input, a component video signal is the standard analog signal, and a Serial V/A signal is the standard digital signal.
An analog composite signal can also be input using the optional “BKDW-505(NTSC)/506(PAL)” (DEC-65 board).
The component video signal is input to VPR-1 board, where Y, R-Y, and B-Y signals are converted each from analog to digital, passed through a digital filter, where converted into 10-bit parallel data, and sent to the TBC IC (IC307).
In this case, the R-Y and B-Y signals are multiplexed in the digital filter and converted into chroma (C) data.
The Serial V/A signal is input to DIF-16 board and separated into video data and audio data.
The video data is decoded and converted into 10-bit parallel data (“D1 DATA 0 through 9”), then input to VPR-1 board and sent to the TBC IC mentioned above.
If DEC-65 board (optional) is used, the input analog composite video signal is decoded on DEC-65 board and converted into 10-bit parallel data (“DEC DATA 0 through 9”), then input to VPR-1 board and sent to the same TBC IC.
The TBC IC clamps the component video input signal, selects a necessary data from these input data, transfers it to the reference clock, multiplexes the Y data and C data, and converts them into 10-bit parallel data.

It also generates various test signals under the control of the MPU (IC753), receives the “REC DATA”, “PB DATA”, and “D1/D2 DATA” (encoder outputs) that are fed back as “multiloops”, and executes the diagnosis.
The 10-bit parallel data output from the TBC IC is added VITC data in IC312, then sent to DPR-36 board as recording video data (“REC DATA 0 through 9”).
In case that a setup is added to the signal in NTSC system, the data is removed the setup and corrected the level by IC310(NTSC only) in the previous stage of IC312.

Next, the playback process is described below.
The decoded video PB data (“PB DATA 0 through 9”) sent from DPR-36 board is input to the video process IC (IC504).
The TBC-processed Betacam PB data (“B-CAM DATA 0 through 9”) is also sent from TBC-23 board.
The “EE data 0 through 9” that is bypassed from the “REC data” is also input. IC504 selects the input data according to the system mode and sends it to encoder IC (IC505).
The encoder IC converts the input data into various 10-bit parallel data (component Y, R-Y, and B-Y data, composite data, VISC Y data, and D1/D2 data) and outputs them together with the control data and clock signals required for after data processing.
The component Y, R-Y, and B-Y data are converted each from digital to analog so as to produce an analog signal, then output via clamp circuits.
The composite data branches into two paths.
One is converted from digital to analog, clamped, output, and divided on CP-218 board to produce “OUTPUT VIDEO 1 and 2” signals.
The another is converted from digital to analog, superimposed a character signal by the switching of IC514, and output as “OUTPUT VIDEO 3” signal.
The VISC Y data is converted from digital to analog, sent through a low-pass filter to TBC-23 board, and used to adjust the video phase of a Betacam PB signal.
The D1/D2 data is sent directly to DIF-16 board.

Lastly, the control system is described below.
Two systems (video process control circuit and timing reference signal generator circuit) are provided for the control system.
The video process control is performed by the MPU (IC753) under the command (“SYIF2 CMD”) of the serial communication from the main CPU on SS-52 board.
The MPU sends control signals to each main IC on VPR-1 board, and controls each signal level and phase in A/D and D/A conversion systems via EVRs (IC754 and IC755).
For the timing reference signal generation, the timing generator IC (IC1019) controls a PLL circuit to generate a 27MHz reference clock signal according to the sync and burst signals separated from an “INPUT REF VIDEO” signal.
The generated signal is sent to each board as the video process timing reference signal.
Moreover, audio clock generator IC (IC1032), while receiving this signal, generates various reference audio clock signals synchronized with the reference video signal and sends them to each board as the audio process timing reference signal.

*
①TP101(N-6) STOP (E-E) mode
TP104(N-5) STOP (E-E) mode

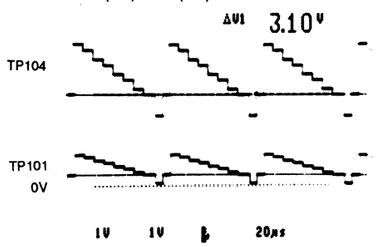

④TP601(R-1) STOP (E-E) mode

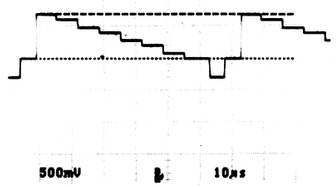

⑦TP603(R-3) STOP (E-E) mode

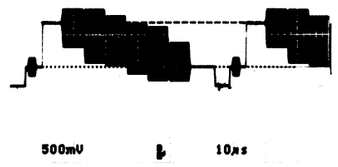

⑩COMPONENT B-Y OUT STOP (E-E) mode

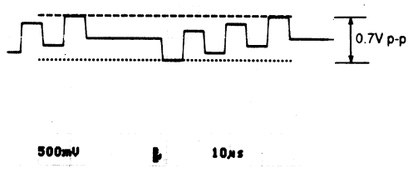

*
②TP102(P-6) STOP (E-E) mode
TP106(P-5) STOP (E-E) mode

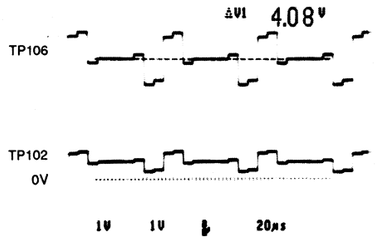

⑤TP600(R-2) STOP (E-E) mode

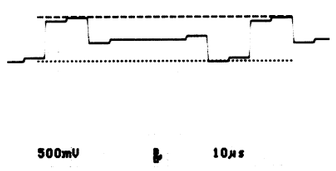

⑥COMPONENT Y OUT STOP (E-E) mode

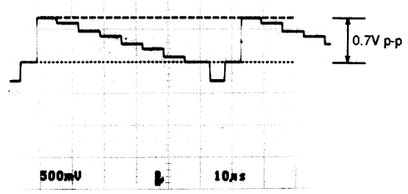

⑪COMPOSITE OUT STOP (E-E) mode

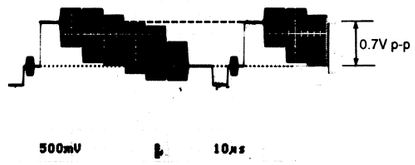

*
③TP103(R-6) STOP (E-E) mode
TP105(R-5) STOP (E-E) mode

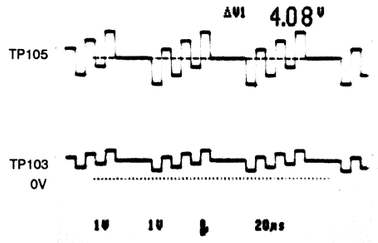

⑥TP602(R-2) STOP (E-E) mode

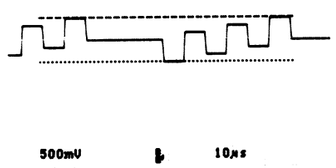

⑨COMPONENT R-Y OUT STOP (E-E) mode

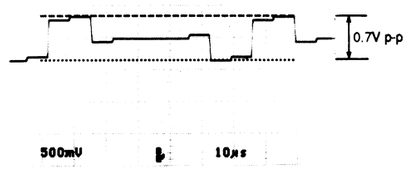

Measurement Condition
INPUT SIGNAL : 100% COLOR BARS
MODE : STOP (E-E) mode
*…OSCILLOSCOPE : DC mode

VPR-1 BOARD -A Side- (Lot No. 341 or higher)

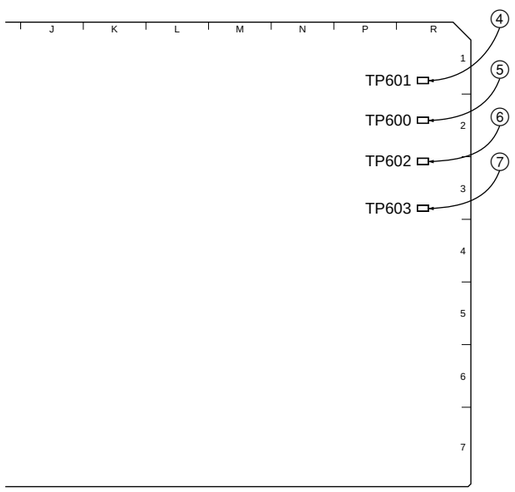

VPR-1 BOARD -A Side- (Lot No. 302 thru. 334)

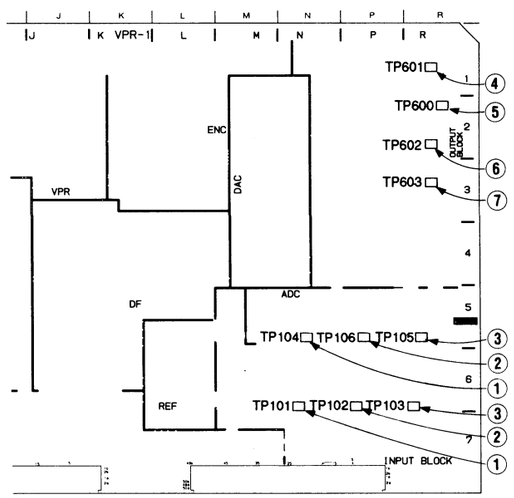

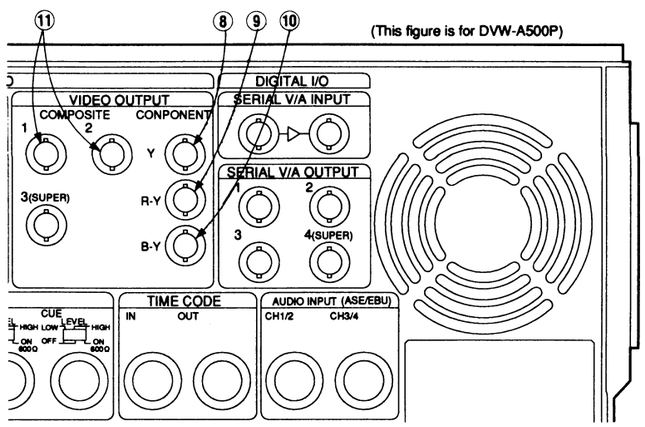

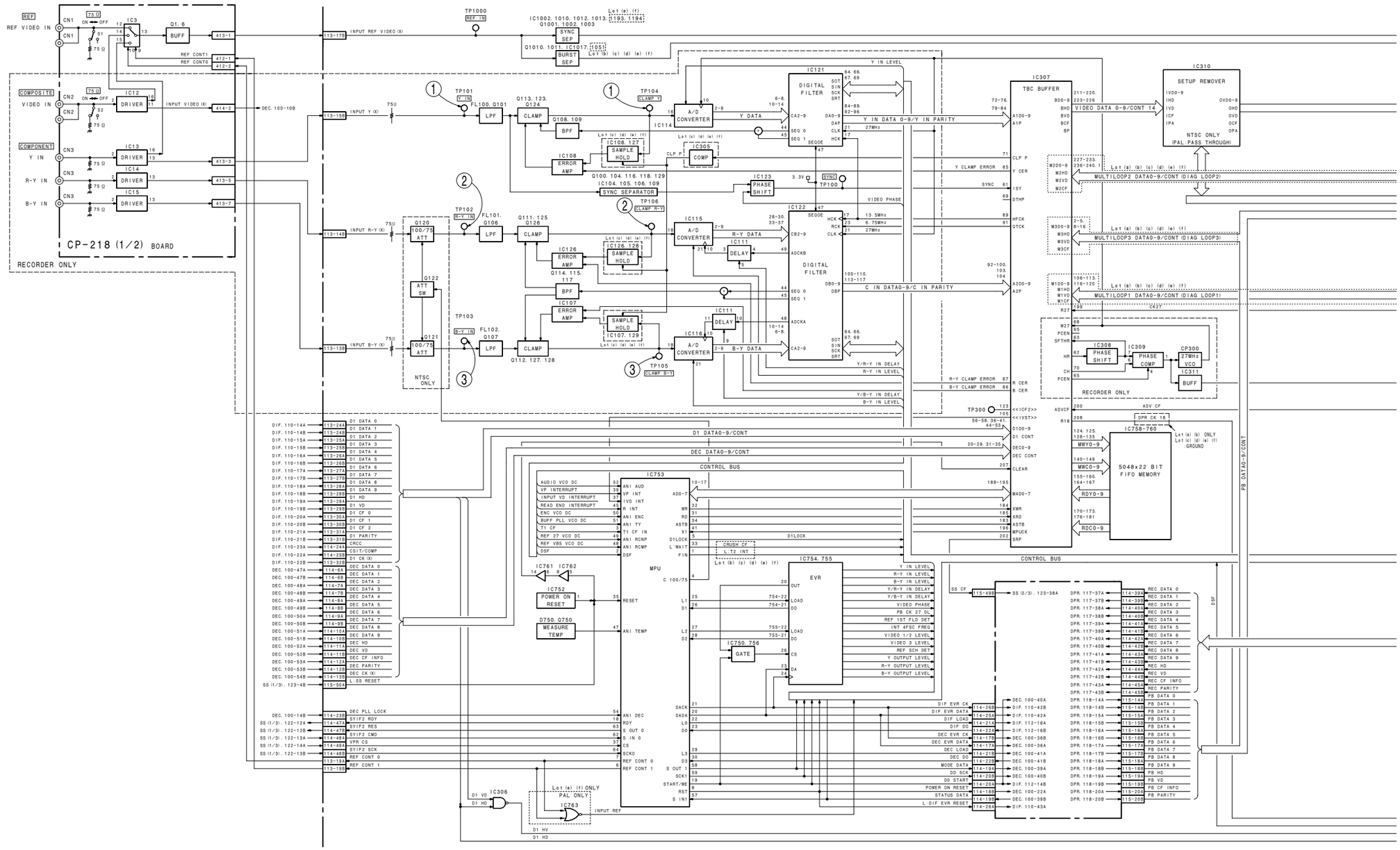
CP-218 (1/2) BOARD
RECORDER ONLY
REF VIDEO IN
COMPOSITE VIDEO IN
COMPONENT
Y IN
R-Y IN
B-Y IN
IC3
Q1, 6
BUFF
IC12
IC13
IC14
IC15
DRIVER
INPUT REF VIDEO (X)
INPUT VIDEO (X)
INPUT Y (X)
INPUT R-Y (X)
INPUT B-Y (X)
TP1000
REF IN
IC1002, 1010, 1012, 1013, Q1001, 1002, 1003
SYNC SEP
Q1010, 1011, IC1017
BURST SEP
TP101
Y IN
FL100, Q101
LPF
Q113, 123, Q124
CLAMP
Q108, 109
BPF
IC108, 127
SAMPLE HOLD
IC108
ERROR AMP
Q100, 104, 116, 118, 129
IC104, 105, 106, 109
SYNC SEPARATOR
TP104
CLAMP Y
IC114
A/D CONVERTER
Y DATA
IC121
DIGITAL FILTER
Y IN DATA 0-9/Y IN PARITY
IC305
COMP
IC123
PHASE SHIFT
TP100
VIDEO PHASE
TP102
R-Y IN
FL101, Q106
Q111, 125, Q126
IC126, 128
Q114, 115, 117
TP106
CLAMP R-Y
IC115
R-Y DATA
IC111
DELAY
IC122
C IN DATA0-9/C IN PARITY
Q120
100/75 ATT
Q122
ATT SW
Q121
NTSC ONLY
TP103
B-Y IN
FL102, Q107
Q112, 127, 128
IC107
IC107, 129
TP105
CLAMP B-Y
IC116
B-Y DATA
Y/R-Y IN DELAY
R-Y IN LEVEL
Y/B-Y IN DELAY
B-Y IN LEVEL
IC307
TBC BUFFER
IC310
SETUP REMOVER
NTSC ONLY
(PAL: PASS THROUGH)
VIDEO DATA 0-9/CONT 14
MULTILOOP2 DATA0-9/CONT (DIAG LOOP2)
MULTILOOP3 DATA0-9/CONT (DIAG LOOP3)
MULTILOOP1 DATA0-9/CONT (DIAG LOOP1)
IC308
PHASE SHIFT
IC309
PHASE COMP
CP300
27MHz VCO
IC311
BUFF
RECORDER ONLY
ADV CF
DPR CK 18
IC758-760
5048x22 BIT FIFO MEMORY
MWY0-9
MWC0-9
RDY0-9
RDC0-9
D1 DATA0-9/CONT
DEC DATA0-9/CONT
CONTROL BUS
IC753
MPU
AUDIO VCO DC
VP INTERRUPT
INPUT VD INTERRUPT
READ END INTERRUPT
ENC VCO DC
BUFF PLL VCO DC
T1 CF
REF 27 VCO DC
REF VBS VCO DC
DSF
CRUSH CF
L:T2 INT
IC761 IC762
IC752
POWER ON RESET
D750, Q750
MEASURE TEMP
IC754, 755
EVR
IC750, 756
GATE
Y IN LEVEL
R-Y IN LEVEL
B-Y IN LEVEL
Y/R-Y IN DELAY
Y/B-Y IN DELAY
VIDEO PHASE
PB CK 27 DL
REF 1ST FLD DET
INT 4FSC FREQ
VIDEO 1/2 LEVEL
VIDEO 3 LEVEL
REF SCH DET
Y OUTPUT LEVEL
R-Y OUTPUT LEVEL
B-Y OUTPUT LEVEL
DIF EVR CK
DIF EVR DATA
DIF LOAD
DIF DO
DEC EVR CK
DEC EVR DATA
DEC LOAD
DEC DO
MODE DATA
DD SCK
DD START
POWER ON RESET
STATUS DATA
L:DIF EVR RESET
IC306
D1 VD
D1 HD
IC763
PAL ONLY
INPUT REF
PB DATA0-9/CONT
DIF

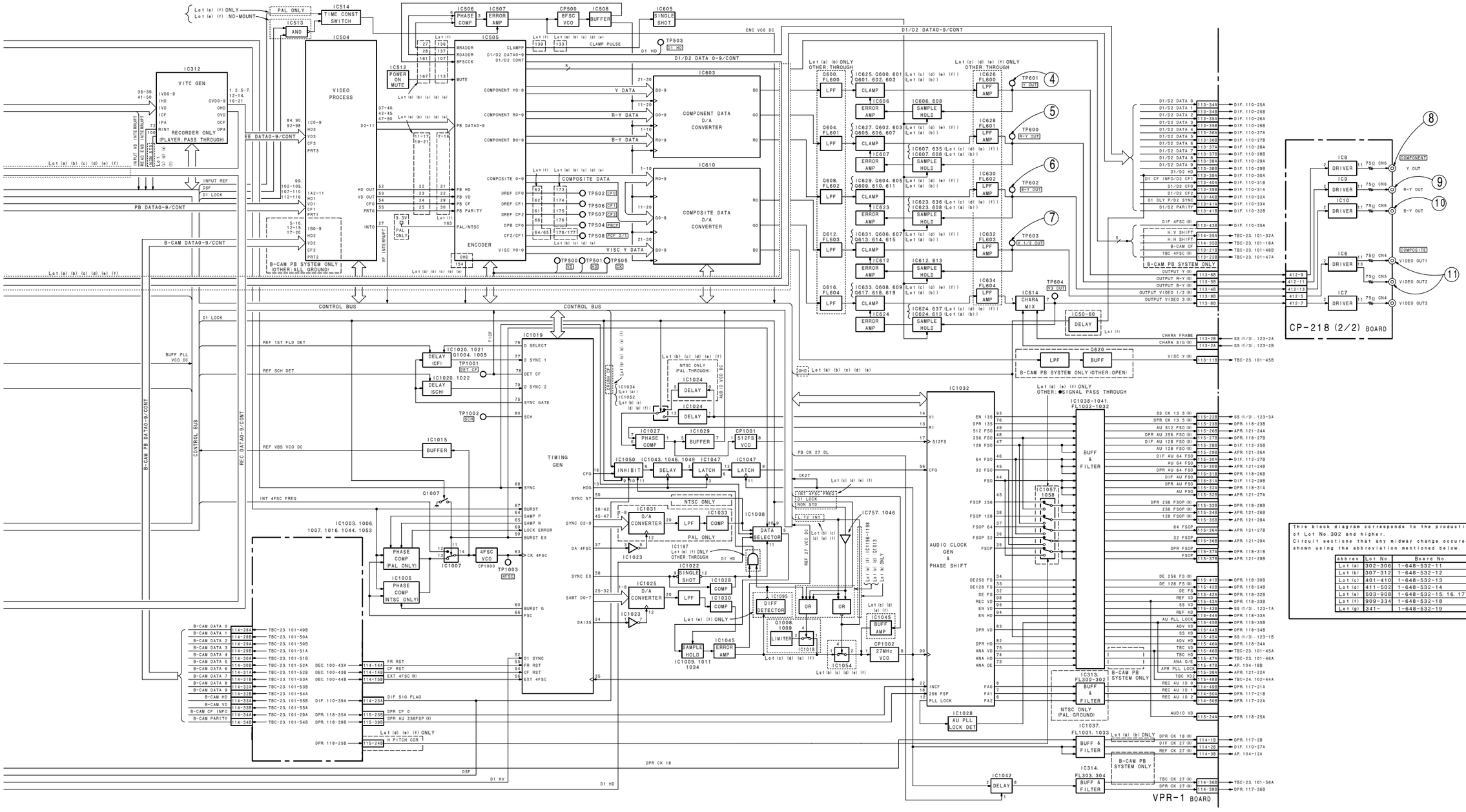

This block diagram corresponds to the production lots of Lot No.302 and higher.
Circuit sections that any midway change occured are shown using the abbreviation mentioned below.

abbrev.	Lot No.	Board No.
Lot (a)	302-306	1-648-532-11
Lot (b)	307-312	1-648-532-12
Lot (c)	401-410	1-648-532-13
Lot (d)	411-502	1-648-532-14
Lot (e)	503-908	1-648-532-15. 16. 17
Lot (f)	909-334	1-648-532-18
Lot (g)	341-	1-648-532-19

Video Processor
VPR-1 CP-218
DVW-A500/500
DVW-A500P/500P

[CIRCUIT DESCRIPTION OF APR-1 BOARD]

APR-1 board is an audio processor board that converts the input audio signal into digital data, converts the playback digital data into an analog signal, and controls the digital audio system.

The recording process is described below.
For analog audio inputs, CH1 through CH4 audio signals are input from the "AUDIO INPUT" connectors on the rear panel.
A CUE signal is also input, but it is not passed through APR-1 board.
The analog audio signals input to APR-1 board are adjusted in level for every channel and passed through the emphasis amplifiers.
The signals are then input to A/D converters (IC107 and IC307), converted into serial data ("AD R 1/2 and 3/4") two by two audio channels, and sent to DPR-36 board.
For digital audio inputs, "AES/EBU digital audio signals" are input.
These signals are serial signals obtained by means that two-channel digital audio data are multiplexed and coded by the bi-phase mark coding method.
CH1/2 and CH3/4 serial signals exist, and 4-channel audio data can be input.
The AES/EBU digital audio signals input to APR-1 board are decoded by AES/EBU receiver/transceiver IC (IC1562) (*AES/EBU receiver ICs (IC7 and IC8)), converted into serial data ("AES R 1/2 and 3/4") two by two audio channels, and sent to DPR-36 board.
In addition, a Serial V/A signal also exists, but it is input to DIF-16 board and separated into video data and audio data.
Since the audio data is converted into serial data ("SIF R 1/2 and 3/4") two by two audio channels and sent directly to DPR-36 board, the Serial V/A signal is not passed through APR-1 board.
As described later, however, this conversion process is controlled by the MPU (IC51) on APR-1 board, so the MPU exchanges 8-bit parallel data ("SIF DATA 0 through 7") with DIF-16 board.

Next, the playback process is described below.
Audio data ("DA T 1/2 and 3/4", "MONI L/R", and "AES T 1/2 and 3/4") are sent from DPR-36 board to APR-1 board in the form of serial data two by two audio channels.
The "DA T 1/2", "DA T 3/4", and "MONI L/R" data are input each to the audio digital filter to separate two channels, converted from digital to analog for every channel to produce an analog signal, and output through a de-emphasis amplifier. To "MONI L" and "MONI R" output circuits, the CUE MONITOR signals branched from the CUE output circuits on CUE-1 board are mixed, and the signals output as "MONITOR OUTPUT" are selected by control signals ("DA MUTE" and "CUE MUTE ON") from the MPU.
The "AES T 1/2" and "AES T 3/4" data input to APR-1 board are encoded by AES/EBU receiver/transceiver IC (IC1562) (*AES/EBU transceiver ICs (IC1 and IC3)), converted into AES/EBU digital audio signals ("AES O 1/2" and "AES O 3/4") two by two audio channels, then output.
Additionally, "SIF T 1/2 and 3/4" serial audio data are also output from DPR-36 board. However, these data are sent directry to DIF-16 board and encoded to a Serial V/A signal.
When an analog Betacam tape is played back, the audio signals ("B PB CH-1 and CH-2") that are played back from the longitudinal tracks of the tape, and the audio signals ("B PB CH-3 and CH-4") that are AFM-demodulated from the PB RF signal in track C, are sent from AP-28 board to APR-1 board, input through the emphasis amplifiers in the recording system circuit to the A/D converters, and converted into serial data two by two audio channels.
The resultant data are sent to DPR-36 board via the same route as in "AD R 1/2 and 3/4" data.
However, the unit is in the analog PB mode at that time.
Therefore, the data input to DPR-36 board are immediately bypassed to the PB circuit and gain-controlled interlocking with the audio PB level adjustment volume control on the control panel.
The data are then returned to APR-1 board via the same route as in "DA T 1/2 and 3/4" data, passed through the PB processing circuit on APR-1 board, and output as the PB audio signals of the Betacam tape.

Lastly, the control system is described below.
The digital audio system is controlled by the MPU (IC51) under the command ("SYIF3 CMD") of the serial communication from the main CPU on SS-52 board.
In addition to the control of its own board circuit, this control system controls CUE-1 board via an I/O port (IC54), the audio level meter (fluorescent indicator tube) by serial communication, and the audio data processor IC on DPR-36 board by serial communication.
The control system also controls the SIF audio IC on DIF-16 board while exchanging 8-bit parallel data.
Moreover, it operates as the center of the diagnosis and automatic adjustment functions of the whole audio system.

*: For Lot No. 302 through 909

Lot No. 910 and higher

DVW-A500P (EK):	S/N 20808 and higher
DVW-A500P (UC):	S/N 10309 and higher
DVW-A500 (J):	S/N 12764 and higher
DVW-A500 (UC):	S/N 18113 and higher
DVW-500P (EK):	S/N 16301 and higher
DVW-500P (UC):	S/N 10211 and higher
DVW-500 (J):	S/N 10364 and higher
DVW-500 (UC):	S/N 13110 and higher

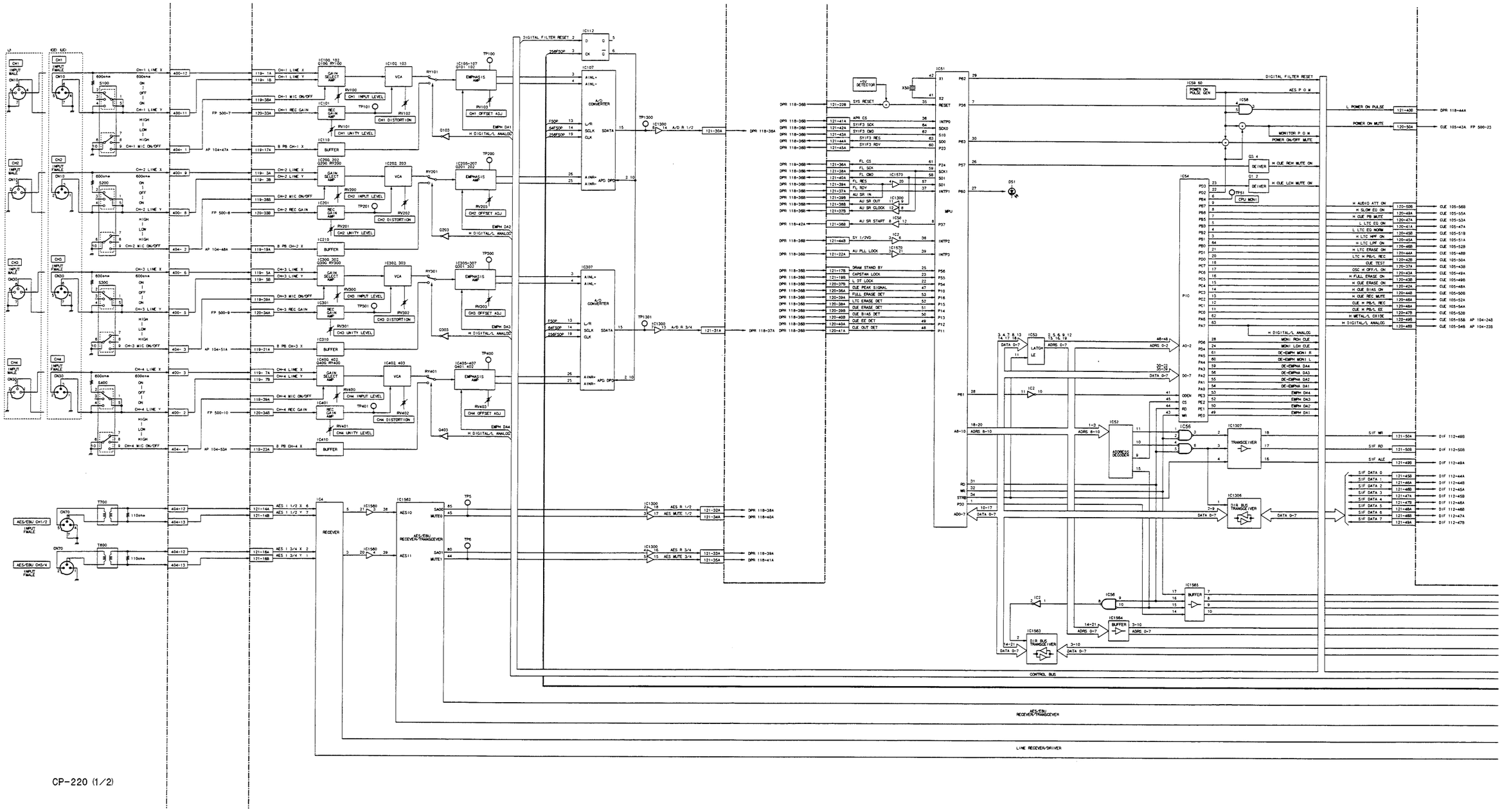

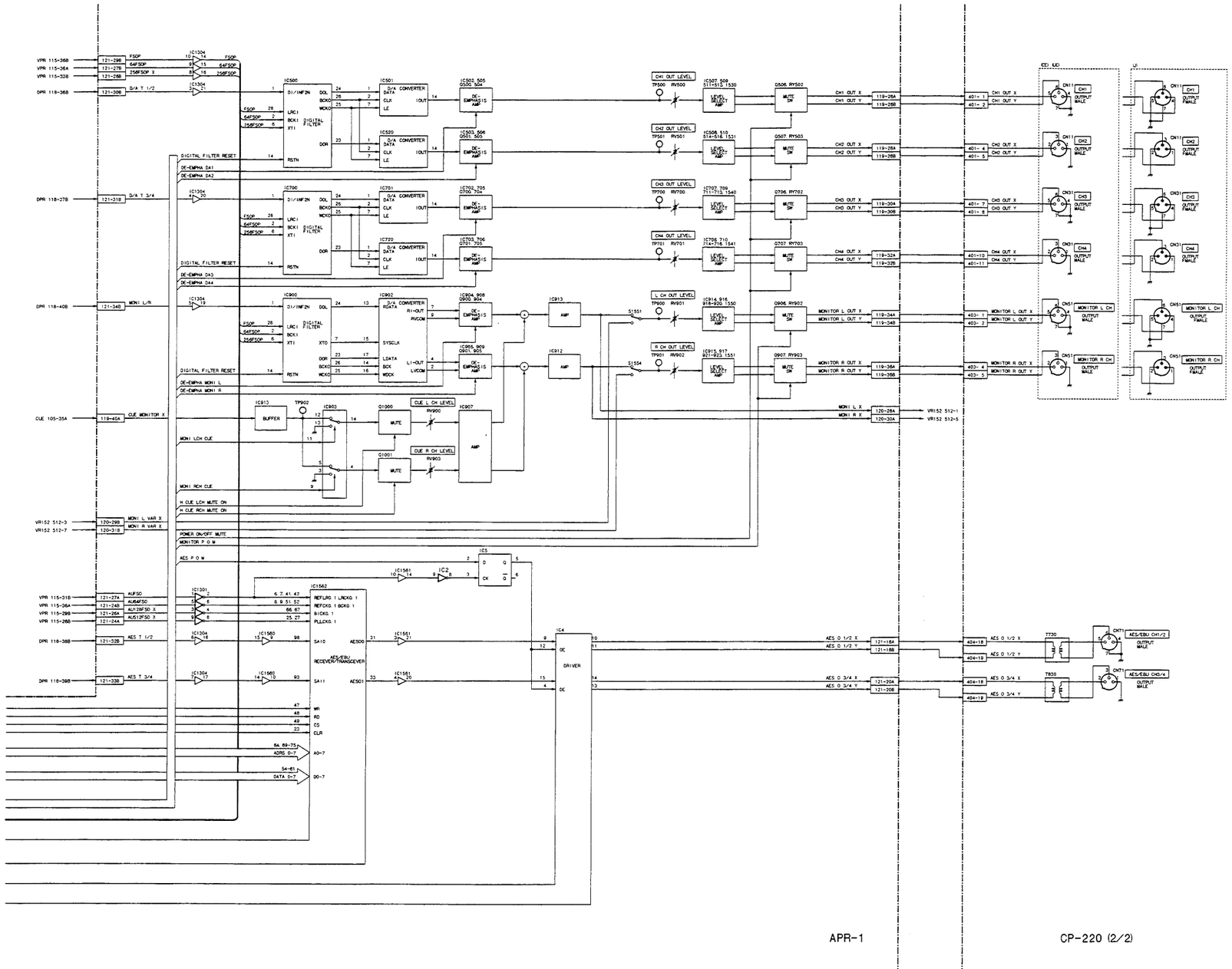

Audio Processor
APR-1 CP-220
DVW-A500/500
DVW-A500P/500P

DVW-A500P (EK):	S/N 10001 through 20807
DVW-A500P (UC):	S/N 10001 through 10308
DVW-A500 (J):	S/N 10001 through 12763
DVW-A500 (UC):	S/N 10001 through 18112
DVW-500P (EK):	S/N 10001 through 16300
DVW-500P (UC):	S/N 10001 through 10210
DVW-500 (J):	S/N 10001 through 10363
DVW-500 (UC):	S/N 10001 through 13109

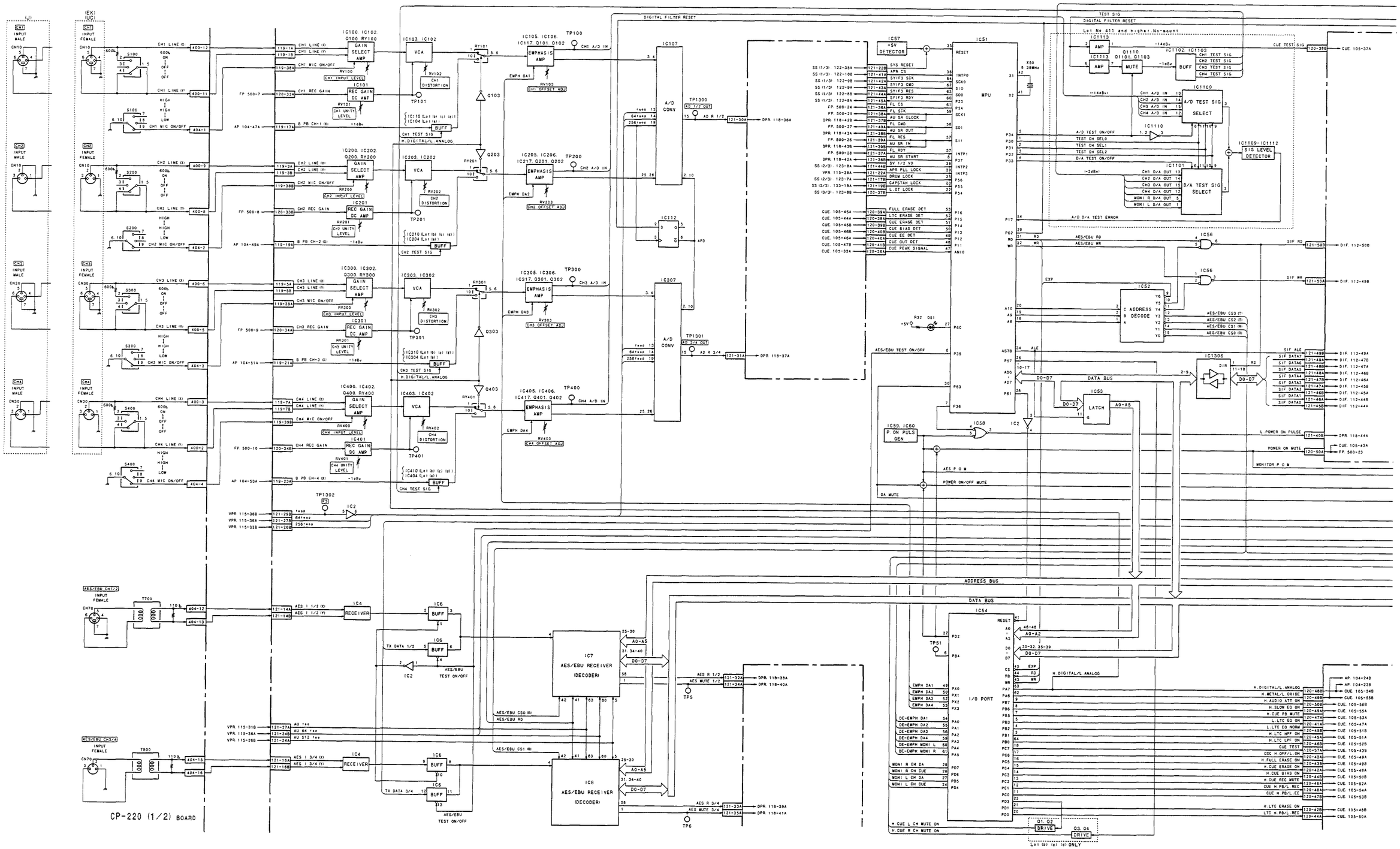

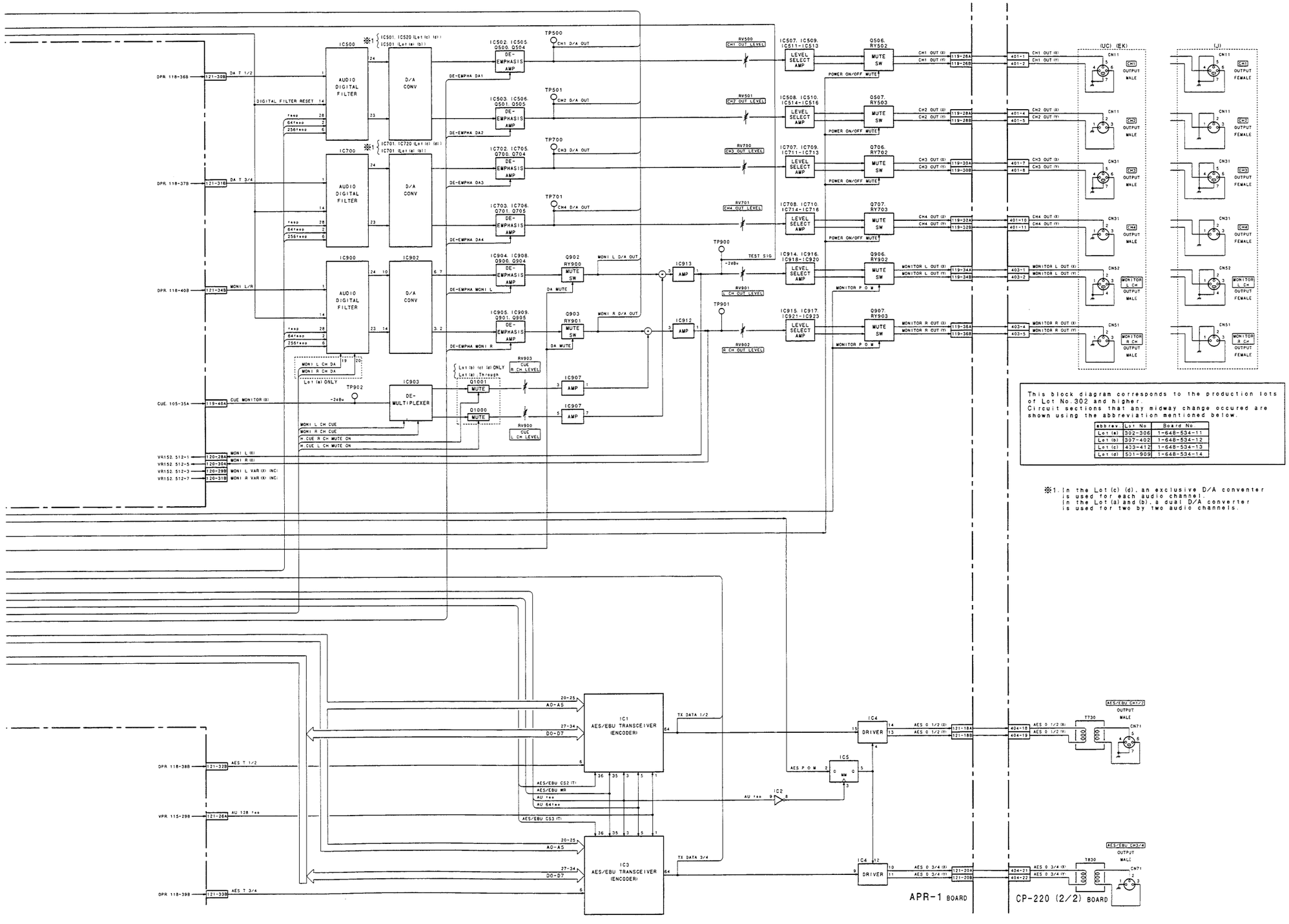

Audio Processor
APR-1 **CP-220**
DVW-A500/500
DVW-A500P/500P

[CIRCUIT DESCRIPTION OF DIF-16 BOARD]

DIF-16 board is a D-1 serial digital interface board that converts the input Serial V/A signal into video and audio digital data and also converts the playback video and audio digital data into a Serial V/A signal.

The recording process is described below.
The Serial V/A signal is a digital signal obtained by means that each data of a digital component video signal and four channel digital audio signals are serialized and channel-coded by the S-NRZI (Scrambled Non-return to Zero Inversion) system.
The receiving Serial V/A signal input to DIF-16 board is channel-decoded and converted into 10-bit parallel data in IC408. Before this processing is performed, a Serial V/A signal that passes an equalizer and switch and is re-clocked by a PLL clock in IC408, is output through a cable driver as an active through signal. For a diagnosis, the Serial V/A output signal that has been passed through the transmitting circuit on DIF-16 board is input by a switch in IC408.
The converted 10-bit parallel data branches into two paths. One is input to a D1 decoder (IC413), and only the video data is decoded, converted into 10-bit parallel video data ("D1 DATA 0 through 9"), and sent to VPR-1 board.
The another is input to SIF audio receiver IC (IC433), and only the audio data is decoded, converted into serial audio data("SIF R 1/2 and 3/4") two by two audio channels, and sent to DPR-36 board.
Since this conversion process is controlled by the MPU on APR-1 board, the SIF audio receiver IC and the MPU on APR-1 board exchange 8-bit parallel data ("SIF DATA 0 through 7"). For a diagnosis, the serial audio input data sent from DPR-36 board is output by a switch (IC442) in the serial audio data output circuit.

Next, the playback process is described below.
10-bit parallel D1 video data ("D1/D2 DATA 0 through 9") are sent from VPR-1 board, and serial audio data ("SIF T 1/2 and 3/4") two by two audio channels are sent from DPR-36 board to DIF-16 board.
The video data is sent to D1 encoder (IC123).
The audio data is sent to SIF audio transmitter (IC119), converted into 10-bit parallel audio data whose four channels are multiplexed, and sent to the same D1 encoder as in the video data.
In the D1 encoder, the video data and audio data are multiplexed, converted into 10-bit parallel V/A data, then sent.
The sent 10-bit parallel V/A data branches into two paths. One is input to IC124, converted into serial data, and channel-encoded by the S-NRZI system so as to produce the Serial V/A signal.
The resultant signal is output through a cable driver to the "SERIAL V/A OUTPUT 1, 2, and 3" connectors.
The another is input to D1 superimpose IC (IC700) and superimposed a serial character signal sent from SS-52 board.
The resultant signal is input to IC701, converted into serial data, channel-encoded by the S-NRZI system so as to produce the "superimposed Serial V/A signal", then output through a cable driver to the "SERIAL V/A OUTPUT 4" connector.

① TP108 (L-2) STOP (E-E) mode (Lot No. 907 or higher)
TP108 (L-2) (TRIG) (Lot No. 907 or higher)
TP108 (M-3) STOP (E-E) mode (Lot No. 302 thur. 906)
TP108 (M-3) (TRIG) (Lot No. 302 thur. 906)

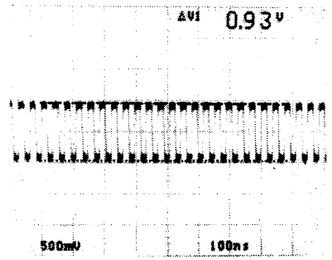

② TP100 (C-6) STOP (E-E) mode (Lot No. 907 or higher)
TP100 (E-5) STOP (E-E) mode (Lot No. 302 thur. 906)
TP101 (C-6) STOP (E-E) mode (Lot No. 907 or higher)
TP101 (E-5) STOP (E-E) mode (Lot No. 302 thur. 906)
TP102 (C-6) (TRIG) (Lot No. 907 or higher)
TP102 (E-6) (TRIG) (Lot No. 302 thur. 906)

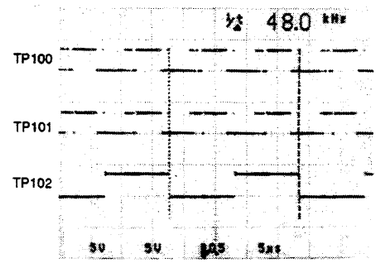

Measurement Condition
MODE : STOP (E-E) mode

DIF-16 Board -A Side- (Lot No. 907 or higher)

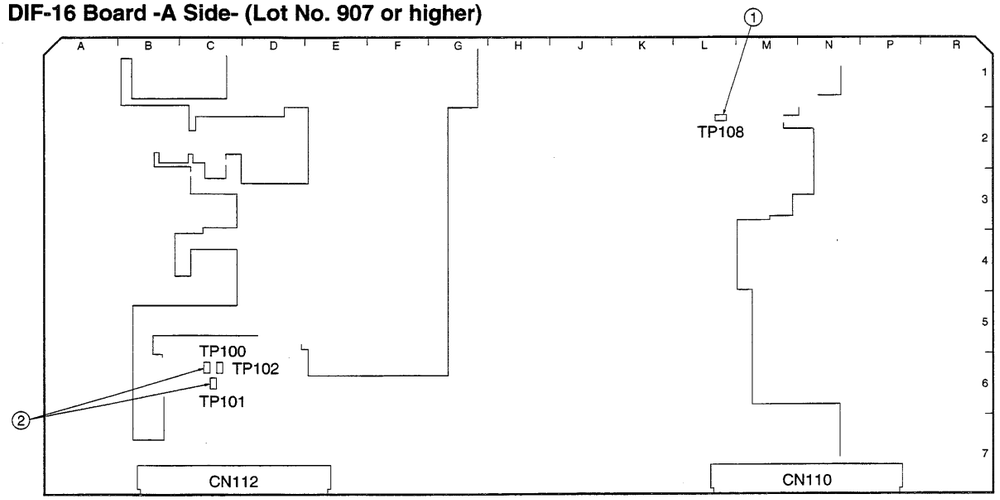

DIF-16 Board -A Side- (Lot No. 302 thur. 906)

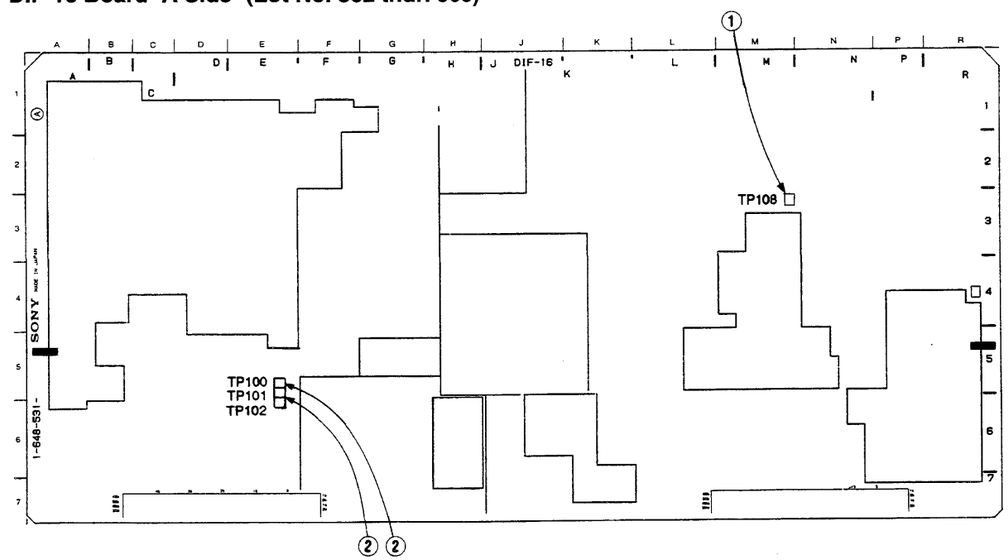

Lot No. 907 and higher

DVW-A500P (EK):	S/N 20718 and higher
DVW-A500P (UC):	S/N 10304 and higher
DVW-A500 (J):	S/N 12744 and higher
DVW-A500 (UC):	S/N 17983 and higher
DVW-500P (EK):	S/N 16156 and higher
DVW-500P (UC):	S/N 10211 and higher
DVW-500 (J):	S/N 10354 and higher
DVW-500 (UC):	S/N 13095 and higher

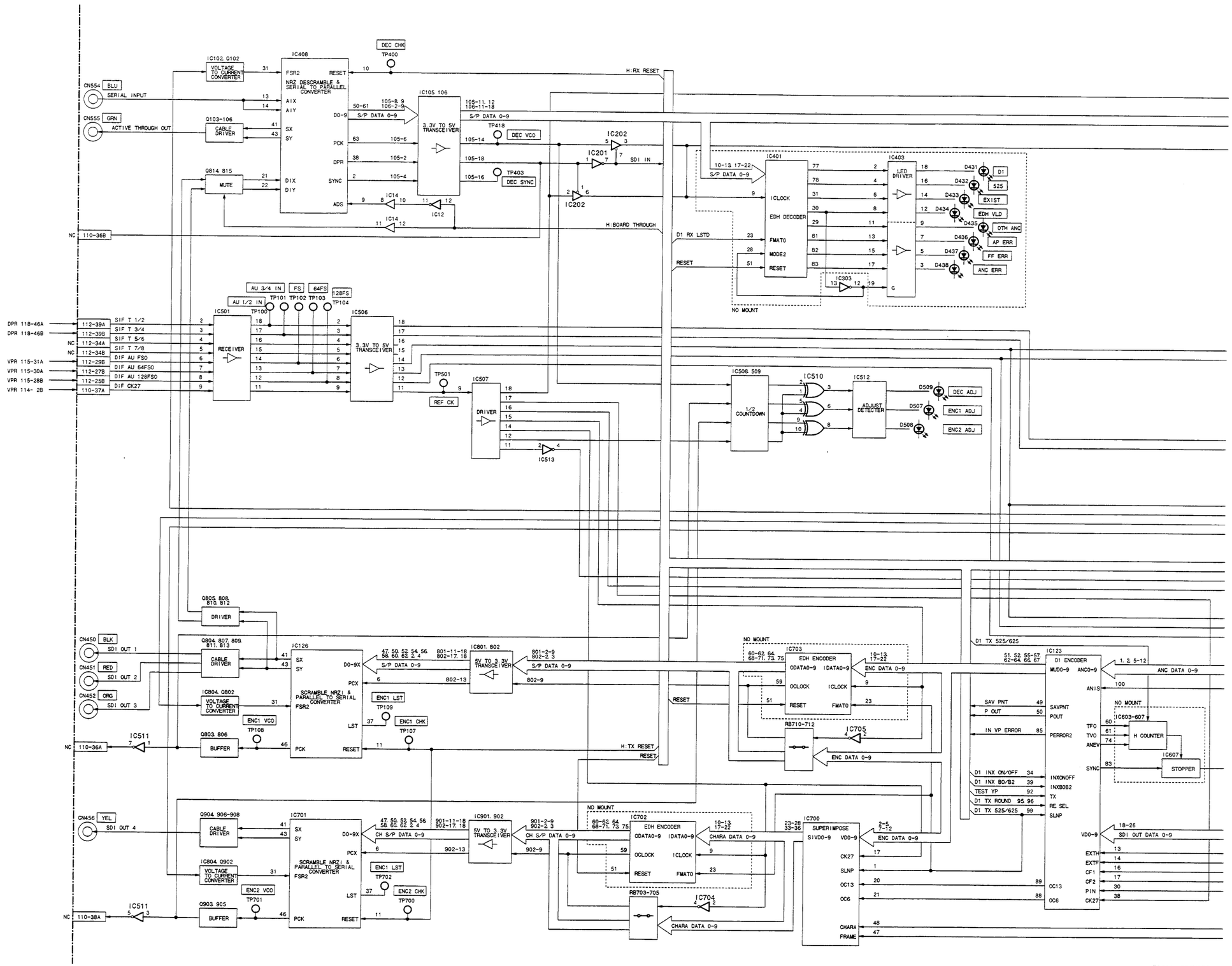

 DIF-16

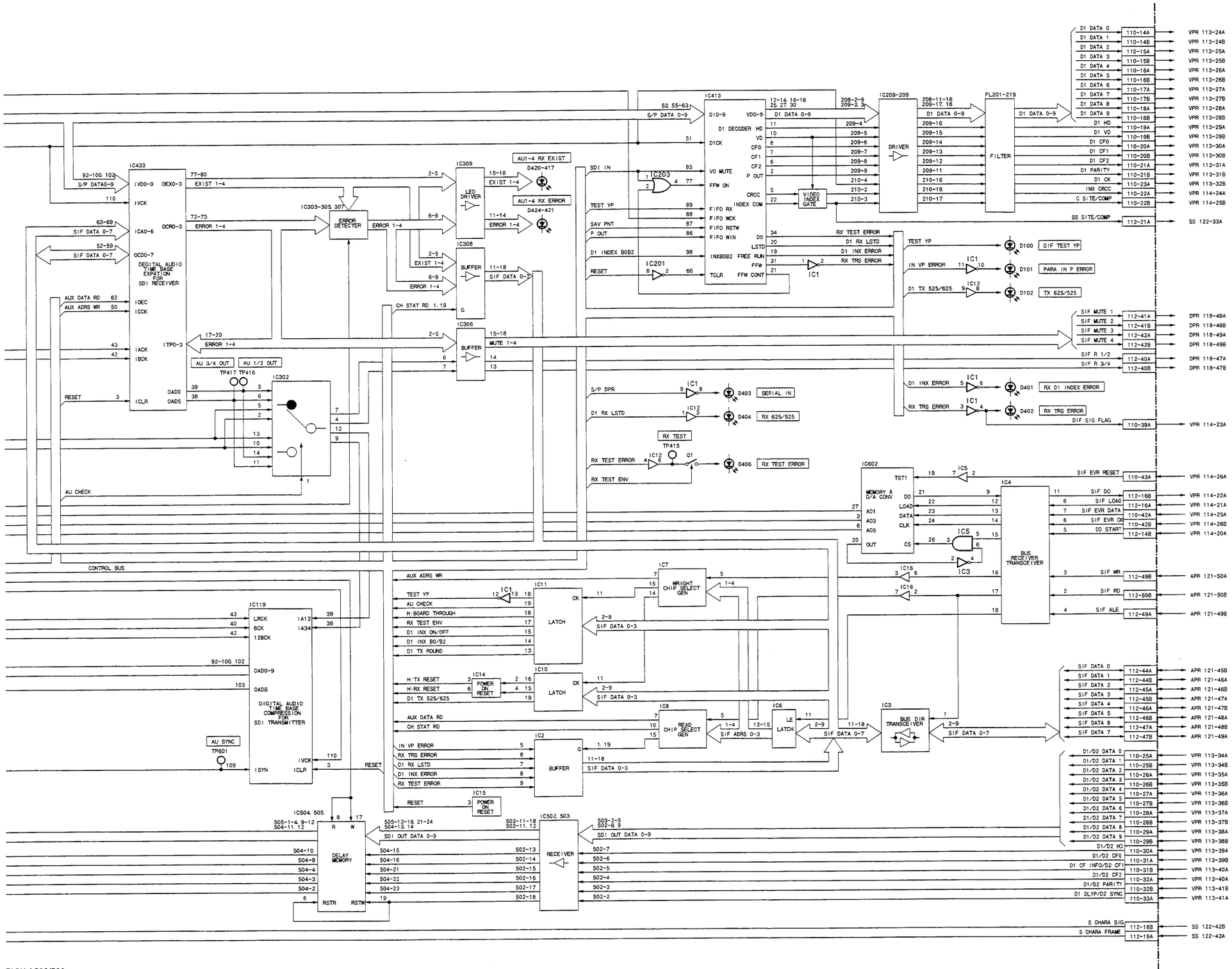

Serial Digital Interface

DIF-16

DVW-A500/500
DVW-A500P/500P

 3-17 (b)

DVW-A500P (EK):	S/N 10001 through 20717
DVW-A500P (UC):	S/N 10001 through 10303
DVW-A500 (J):	S/N 10001 through 12743
DVW-A500 (UC):	S/N 10001 through 17982
DVW-500P (EK):	S/N 10001 through 16155
DVW-500P (UC):	S/N 10001 through 10210
DVW-500 (J):	S/N 10001 through 10353
DVW-500 (UC):	S/N 10001 through 13094

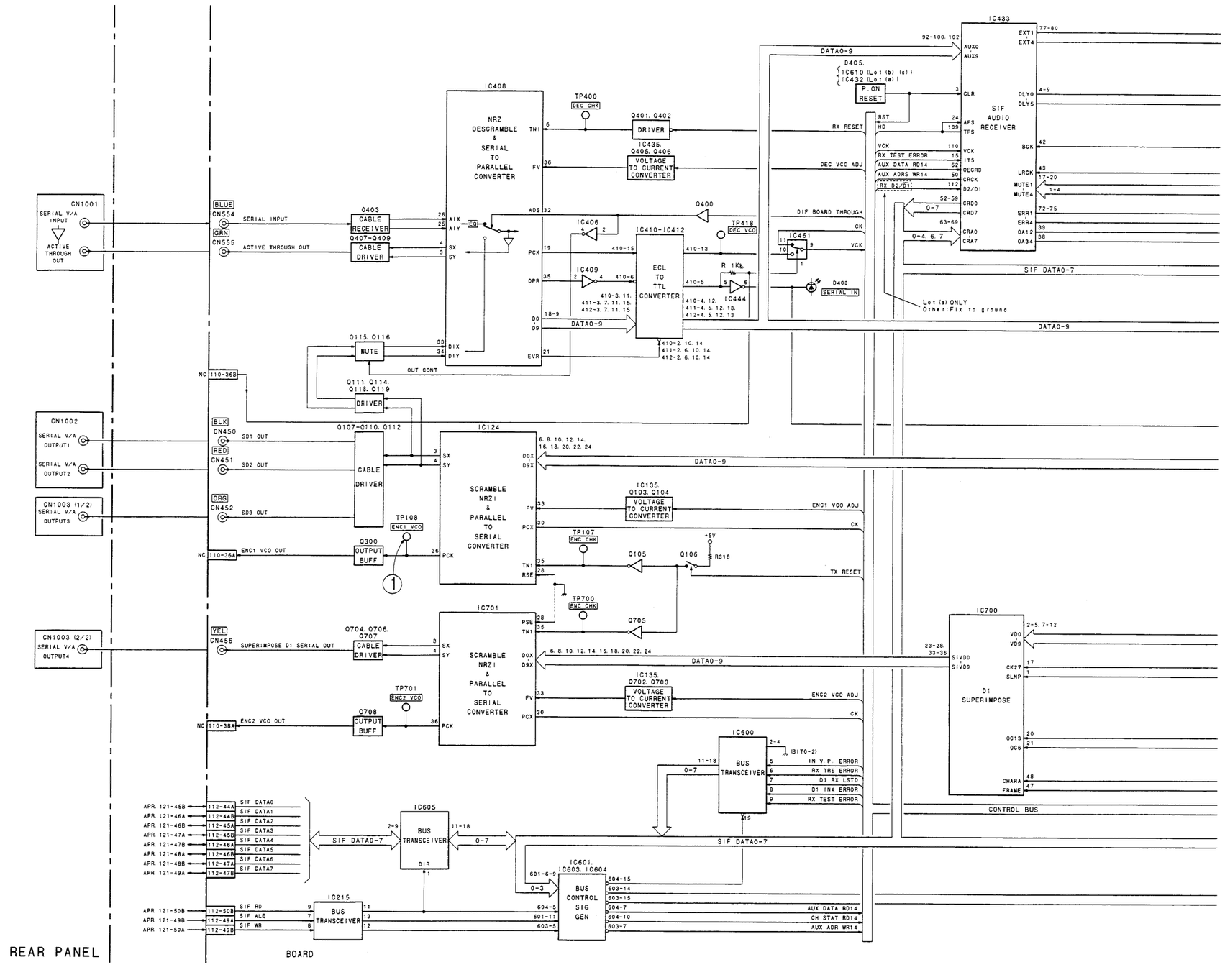

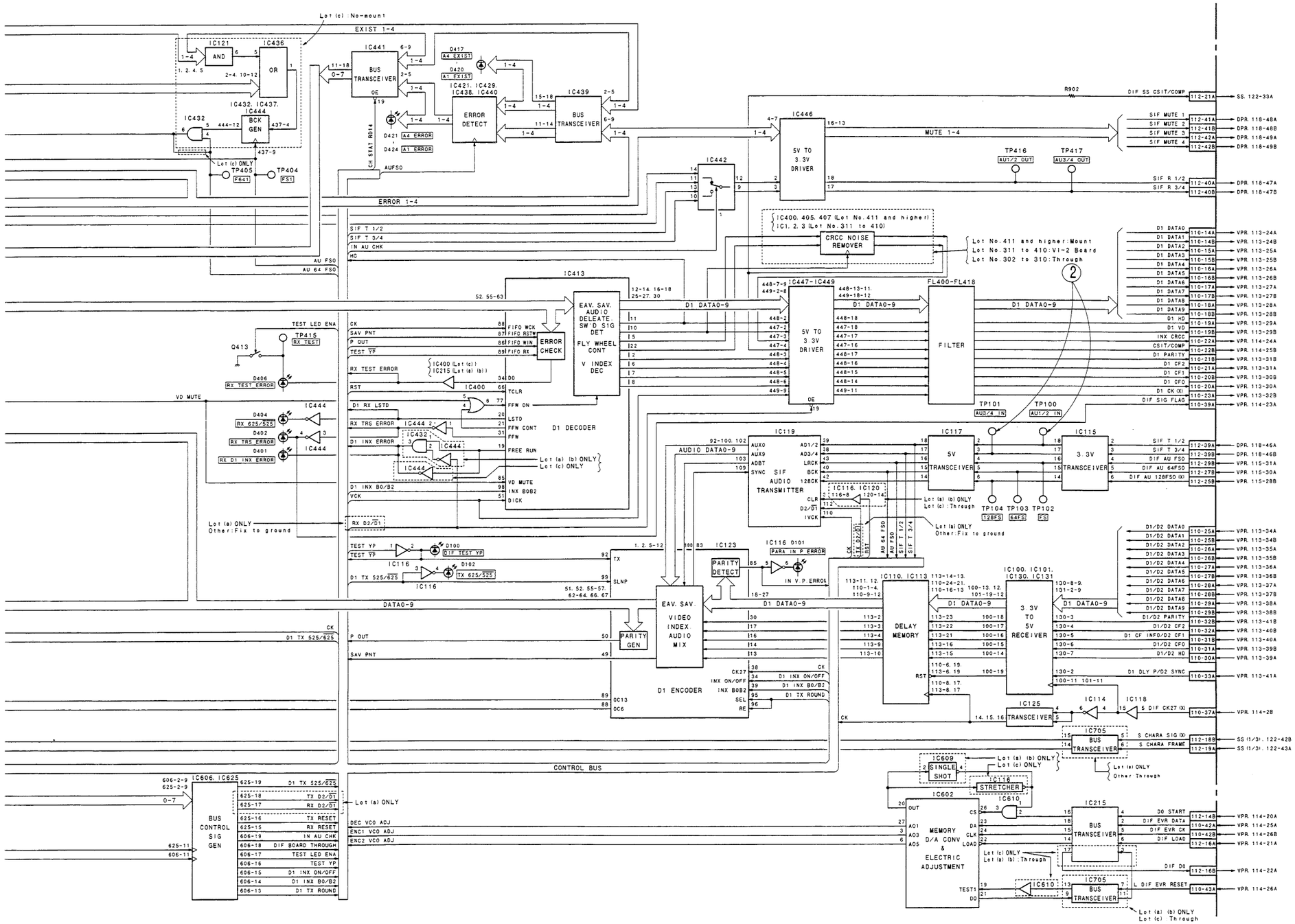

This block diagram corresponds to the production lots of Lot No. 302 and higher.
Circuit sections that any midway change occured are shown using the abbreviation mentioned below.

abbrev.	Lot No.	Board No.
Lot (a)	302-303	1-648-531-11
Lot (b)	307-410	1-648-531-12
Lot (c)	411-906	1-648-531-13

Serial Digital Interface

DIF-16

DVW-A500/500
DVW-A500P/500P

[CIRCUIT DESCRIPTION OF DPR-36 BOARD]

DPR-36 board is a digital processor board that encodes the recording digital data and decodes the playback digital data.

The recording process is described below.
The recording video data (“REC data 0 through 9”) sent from VPR-1 board is input to encoder IC (IC6), where the video data is field-shuffled via memory (IC1100 through IC1102 (or IC9 through IC20 for the board with suffix 11 through 14)), then compressed to the data rate of approximately 1/2 by a newly developed bit rate reduction process.
After that, outer error correction code (ECC) is added to the video data, and the data is track-interleaved via memory (IC21 through IC24).
The recording audio data (“ENC 1/2 and 3/4”) sent from the audio data processor IC (IC69) described later are also input to the encoder IC via IC905.
Outer ECCs are added to the audio data, and the data are field-shuffled via a part of the memory (IC21 through IC24) mentioned above.
In this process, the video data and audio data are multiplexed.
The multiplexed data is added ID data, inner ECC encoded, then added sync data.
The two groups of REC data (“REC AC D0 through D3” and “REC BD D0 through D3”) generated as described above are sent to EQ-45 board for RF processing together with REC ENABLE signals for each head.
All the encoding processes mentioned above are performed by IC6 and IC905.
All the encoding processes are completed in one field.
This thus causes no trouble during editing.

Next, the playback process is described below.
The two groups of AC/BD ADVANCE PB data and CONFIDENCE PB data sent from EQ-45 board are input in parallel to two inner ECC decoder ICs (IC29 and IC38).
The REC data bypassed from the output of the encoder IC for diagnosis execution is also input.
Each inner ECC decoder IC selects a necessary data from these input data, detects the sync data, performs the inner correction based on the detected sync data, then extracts the ID information.
Based on the extracted ID information, each inner ECC decoder performs the clock rate transfer and de-interleaving for the data via memory (IC30, 31, 33, and 34, and IC39, 40, 42, and 43).
In this process, the two groups of data are multiplexed, then separated into V data and V/A data.
They are sent to outer ECC decoder ICs (IC35 and IC44) with each error flag data added.
In IC35, the video data is outer-corrected, de-shuffled via memory (IC76 through IC79 (or IC36 and IC37 for the board suffix 11 through 13)), then sent to video decoder IC (IC45).
The audio data is outer-corrected, de-shuffled via internal memory, then error-concealed.
The resultant data is transferred the clock rate, then sent to the audio data processing system.

As described above, an ECC decoder consists of an inner ECC decoder and an outer ECC decoder.
Two pairs of ECC decoders are installed in this unit, and one pair decodes only the audio data.
Such constitution is arranged to obtain both the audio data before erasure and the inserted audio data during editing and insertion.
This enables the confidence playback for cross-fading during audio editing.
The video data input to the video decoder IC is decoded by the bit rate reduction process so as to return to the former data rate, and de-shuffled via memory (IC1103 through IC1105 (or IC51 through IC62 for the board with suffix 11 through 14)). The data is then error-concealed via FIFO memory (IC63 through IC67) and sent to VPR-1 board as video PB data (“PB DATA 0 through 9”).

Lastly, the audio data processing system is described below.
IC69 and IC911 are the audio data processor.
For the recording audio data, “AD R 1/2 and 3/4”, and “AES R 1/2 and 3/4” data are sent from APR-1 board, and “SIF R 1/2 and 3/4” data are sent from DIF-16 board, all in the form of serial audio data two by two audio channels.
The audio data processor performs the audio data selection, gain control, REC verification, and other data processing, then converts the resultant data into the recording audio data (“ENC 1/2 and 3/4”) and sends them to the encoder IC.
In the PB mode, the decoded audio data is sent to IC73.
IC73 is a jog audio processor.
It compensates the noise during jog or shuttle using external memory (IC74), and sends data to the audio data processor.
The audio data processor performs the gain control, phase adjustment, muting, and other data processing.
It then converts the resultant data into serial audio data “DA T 1/2 and 3/4”, “MONI L/R”, “AES T 1/2 and 3/4”, and sends them to APR-1 board. In addition, it converts the data into serial audio data “SIF T 1/2 and 3/4”, and sends it to DIF-16 board.

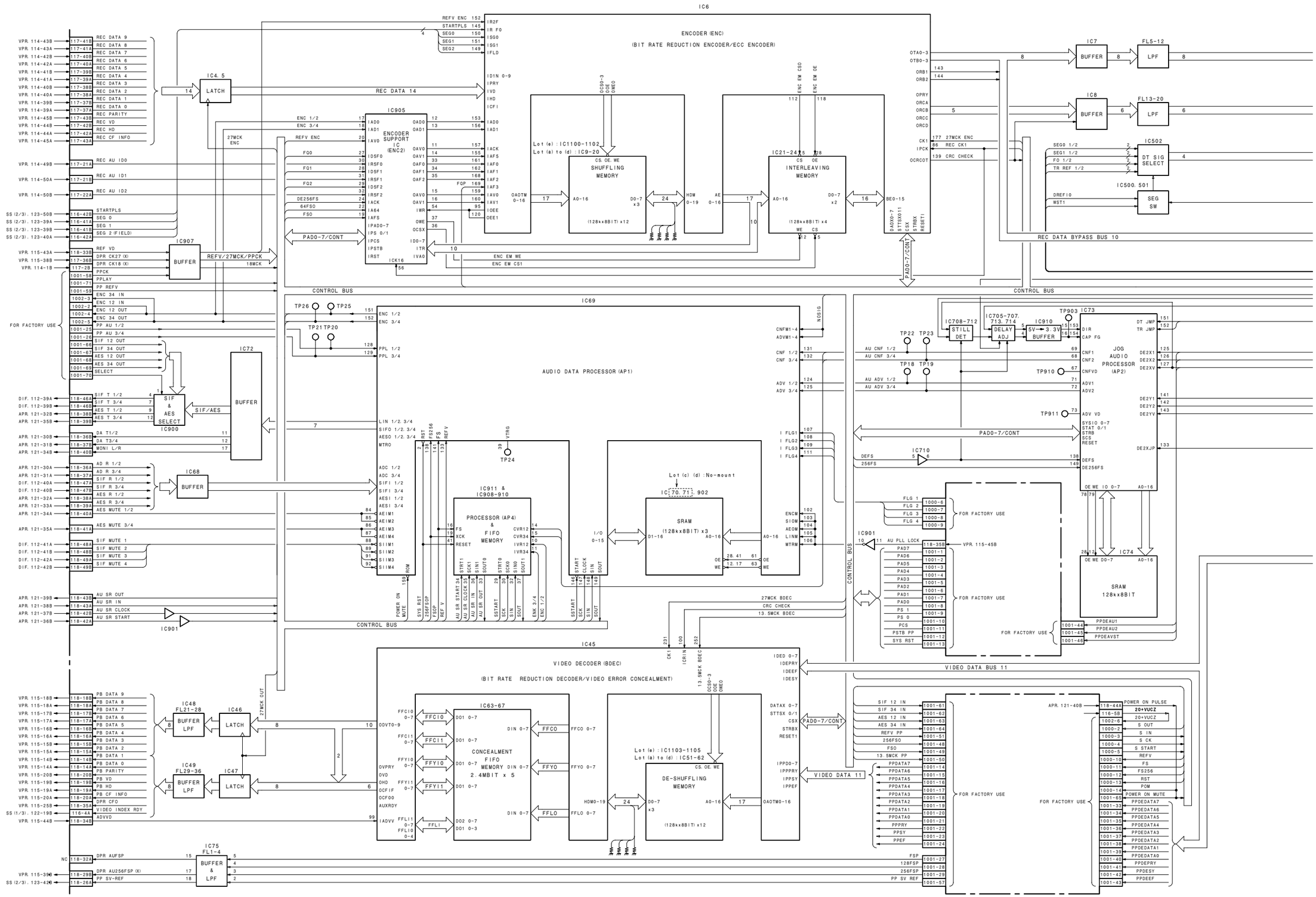
IC6
ENCODER (ENC)
(BIT RATE REDUCTION ENCODER/ECC ENCODER)
IC4. 5
LATCH
REC DATA 14
IC905
ENCODER SUPPORT IC (ENC2)
IC907
BUFFER
REFV/27MCK/PPCK
PAD0-7/CONT
CONTROL BUS
IC7
BUFFER
FL5-12
LPF
IC8
BUFFER
FL13-20
LPF
IC502
DT SIG SELECT
IC500. 501
SEG SW
REC DATA BYPASS BUS 10
IC69
AUDIO DATA PROCESSOR (AP1)
IC911 & IC908-910
PROCESSOR (AP4) & FIFO MEMORY
IC72
BUFFER
SIF & AES SELECT
IC900
SIF/AES
IC68
BUFFER
IC901
IC45
VIDEO DECODER (BDEC)
(BIT RATE REDUCTION DECODER/VIDEO ERROR CONCEALMENT)
IC63-67
CONCEALMENT FIFO MEMORY 2. 4MBIT x 5
IC48
BUFFER LPF
IC46
LATCH
IC49
BUFFER LPF
IC47
LATCH
IC75
BUFFER & LPF
FL1-4
IC73
JOG AUDIO PROCESSOR (AP2)
IC74
SRAM 128x8BIT
IC708-712
STILL DET
IC705-707. 713. 714
DELAY ADJ
IC910
5V → 3. 3V BUFFER
IC710
IC901
VIDEO DATA BUS 11
VIDEO DATA 11
FOR FACTORY USE

DPR-36

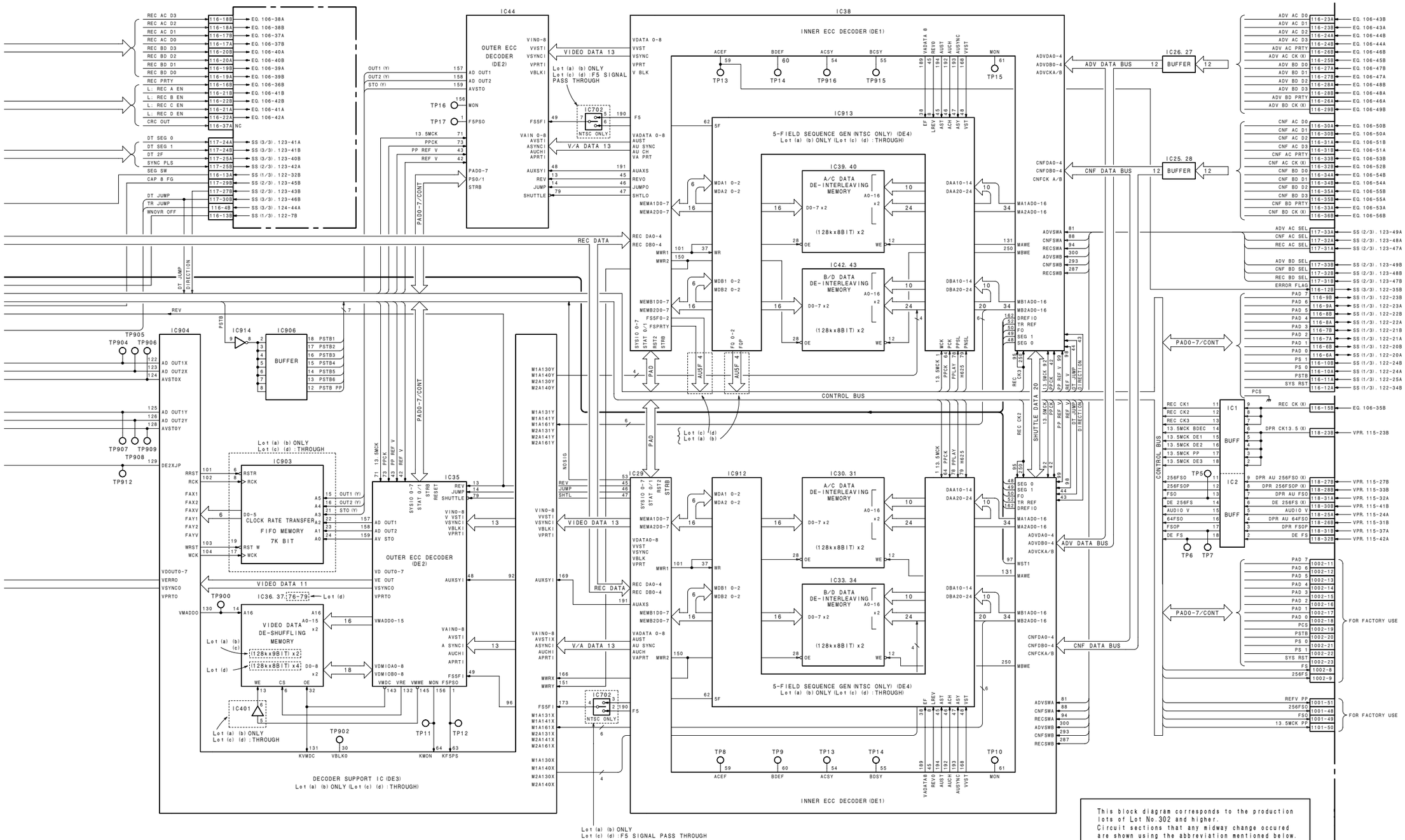

This block diagram corresponds to the production lots of Lot No.302 and higher.
Circuit sections that any midway change occured are shown using the abbreviation mentioned below.

abbrev.	Lot No.	Board No.
Lot (a)	302-303	1-648-533-11
Lot (b)	304-409	1-648-533-12
Lot (c)	410-811	1-648-533-13
Lot (d)	812-074	1-648-533-14
Lot (e)	075-	1-648-533-15

Digital Processor
DPR-36
DVW-A500/500
DVW-A500P/500P

3-21

[CIRCUIT DESCRIPTION OF EQ-45 BOARD] (Lot No. 002 or higher)

EQ-45 board is an RF processor board that converts the REC data sent from DPR-36 board into a REC RF signal and sends it to the drum and that converts the PB RF signal sent from the drum into PB data and sends it to DPR-36 board.

The recording process is described below.
The two groups of parallel REC data ("REC AC D0 through D3", and "REC BD D0 through D3") that are sent from DPR-36 board to EQ-45 board are converted each into serial data in the interface IC (IC103) and sent through a REC driver (IC204) to the head drum.
The REC driver controls the REC currents of each head according to the command from SS-52 board.
In addition to the REC data, the REC ENABLE signals for each head are also sent from DPR-36 board to EQ-45 board.
The select signals for each head (including flying erase heads) are also sent from SS-52 board.
These signals are multiplexed in the interface IC, and the encoded "MPX" signal is sent to the head drum.
The MPX signal is decoded in the head drum and used for switching each REC, PB, and ERASE head amplifier.
"SYSTEM EE1" and "SYSTEM EE2" mode signals are sent from SS-52 board to EQ-45 board.
These are the mode for diagnosis execution.
For the "SYSTEM EE1" mode, the REC data sent from DPR-36 board is bypassed in the interface IC and sent back to DPR-36 board as PB data.
For the "SYSTEM EE2" mode, the REC RF signal (serial REC data) converted by the interface IC is bypassed by switching Q100 through Q103 and input to PB equalizer IC.
This enables the circuit on EQ-45 board to be tested.

Next, the playback process is described below.
The PB RF signal that is played back by each PB head and passed through each head amplifier is sent from the head drum to EQ-45 board.
The signals of heads A and C, and heads B and D, that are switched every time the drum rotates by one half, can be transmitted using the same signal line, respectively.
Therefore, the lines required for the PB RF signal transmission are four pairs of "ADV AC", "ADV BD", "CNF AC", and "CNF BD".
In the Betacam tape PB mode, each head amplifier in a digital system is turned off.
Therefore, the PB RF signals of Betacam PB heads Y-A and Y-B use the "ADV AC" line in common.
The PB RF signals of heads C-A and C-B use the "ADV BD" line in common.
The PB RF signals input to EQ-45 board are sent each to PB equalizer IC (IC401, IC501, IC601, or IC701) for VCA, amplitude equalization, and phase equalization.
An envelope is then detected.
In the Betacam tape PB mode, the "PB Y" and "PB C" RF signals that are input through "ADV AC" and "ADV BD" lines to the PB equalizers are output each via only a VCA circuit and sent to DM-89 board (Betacam PB demodulator board).
The RF signal output from each PB equalizer branches into two paths.
One is sent to A/D converter (IC802, IC804, IC902, or IC904).
The another is low-frequency compensated and amplitude limited using a quantizing feedback (QFB) circuit, then sent to the PLL IC.
In consideration of the tape speed information, the PLL IC extracts a PB clock from the input RF signal and sends the clock signal to the A/D converter mentioned above and VITERBI IC (IC805 or IC905).
The A/D converter is required for the VITERBI processing that is executed in the VITERBI IC in the next stage.
The A/D data of the RF signal output from the A/D converter is input to the VITERBI IC, where a regeneration of the bit is executed by a VITERBI system.
The data is then converted into 4-bit parallel data and sent to the interface IC (IC103) together with the clock signal.
In the interface IC, parity data is added to the data sent from each VITERBI IC.
Four groups of PB data ("ADV AC D0 through D3", "ADV BD D0 through D3", "CNF AC D0 through D3", and "CNF BD D0 through D3") are then output together with their parity data and clock signals and sent to DPR-36 board.

CR5-1BPS PB mode (DVW-A500P ONLY)

① TP103 (C-1) PB mode
TP819 (SS-52) (J-1) (TRIG)

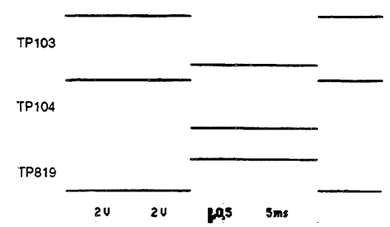

② TP401 (F-1) PB mode (B/W LIMIT OFF)
TP103 (C-1) (TRIG)

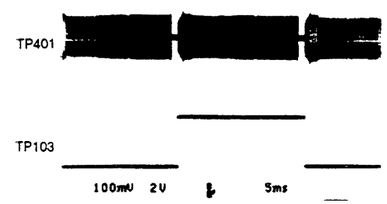

Measurement Condition
INPUT SIGNAL : 100% COLOR BARS
MODE : PB mode
: REC mode
TAPE : ZR5-1P
: CR5-1BPS

ZR5-1P PB mode

① TP103 (C-1) PB mode
TP819 (SS-52) (J-1) (TRIG)

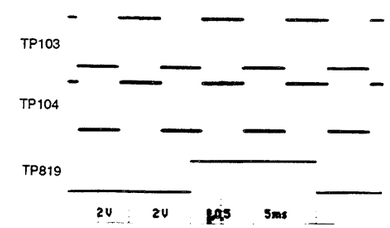

③ TP423 (F-1) PB mode
TP103 (C-1) (TRIG)

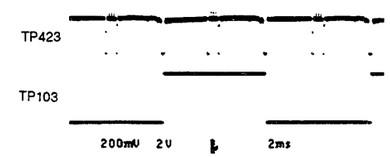

④ TP808 (F-2) PB mode
TP103 (C-1) (TRIG)

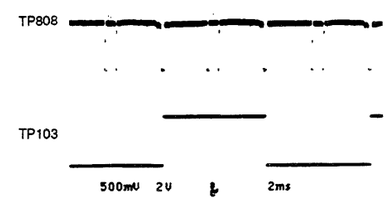

REC mode

⑤ TP101 (C-1) REC mode
TP819 (SS-52) (J-1) (TRIG)

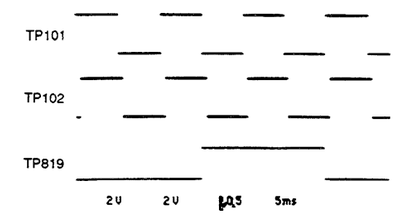

⑥ TP202 (F-7) REC mode
TP101 (C-1) (TRIG)

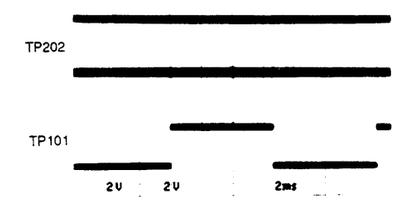

⑦ TP203 (G-1) REC mode
TP204 (F-1) REC mode
TP103 (C-1) (TRIG)

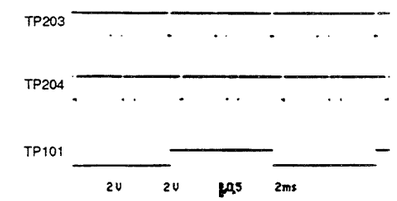

EQ-45 Board -A Side- (Lot No. 002 or higher)

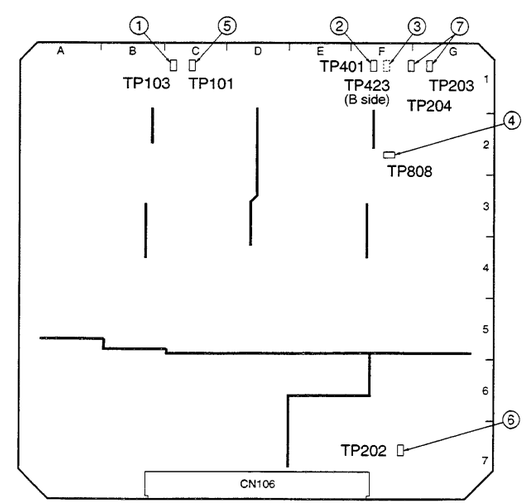

Lot No. 002 and higher

DVW-A500P (EK):	S/N 21323 and higher
DVW-A500P (UC):	S/N 10339 and higher
DVW-A500 (J):	S/N 12869 and higher
DVW-A500 (UC):	S/N 18633 and higher
DVW-500P (EK):	S/N 16616 and higher
DVW-500P (UC):	S/N 10216 and higher
DVW-500 (J):	S/N 10364 and higher
DVW-500 (UC):	S/N 13245 and higher

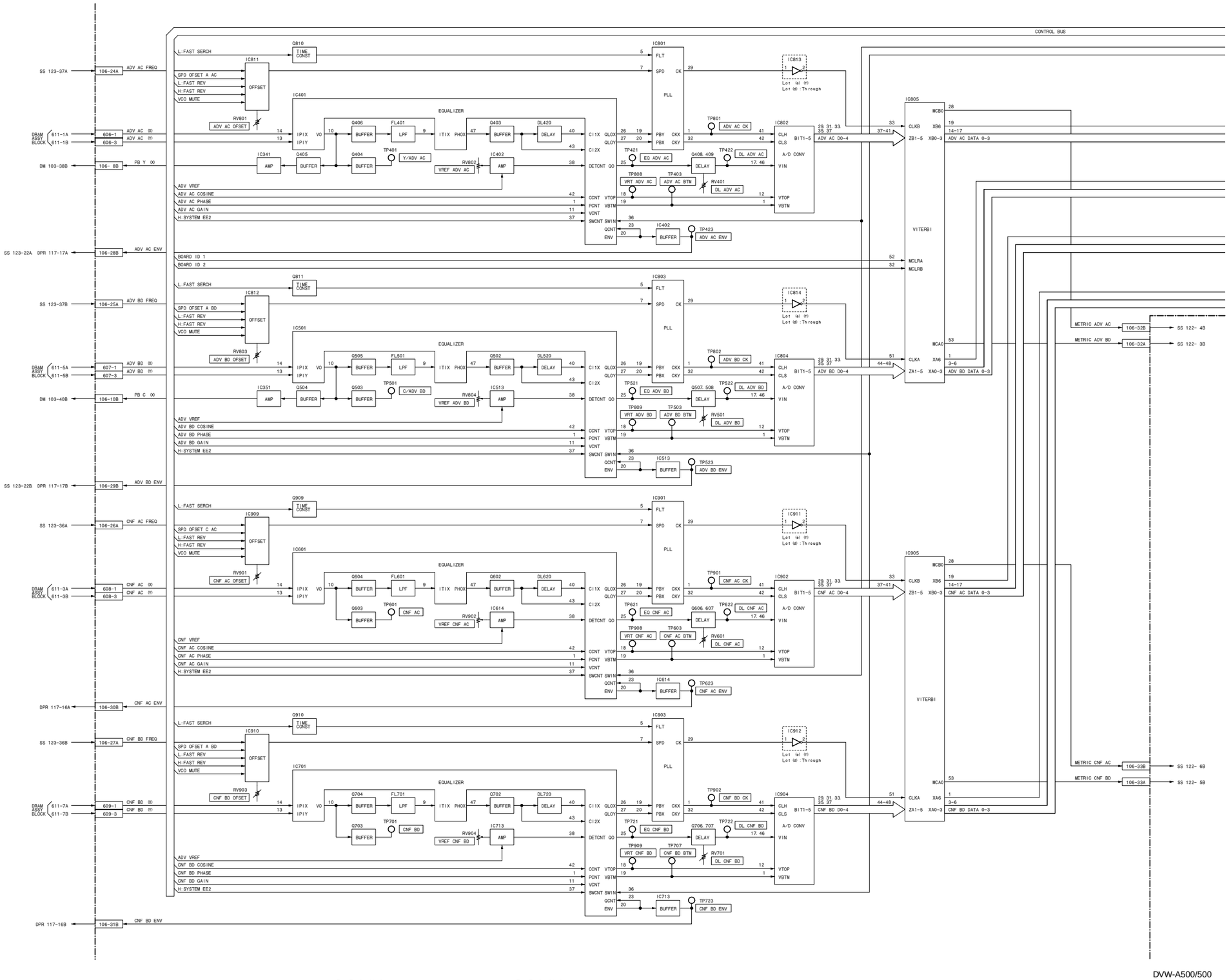

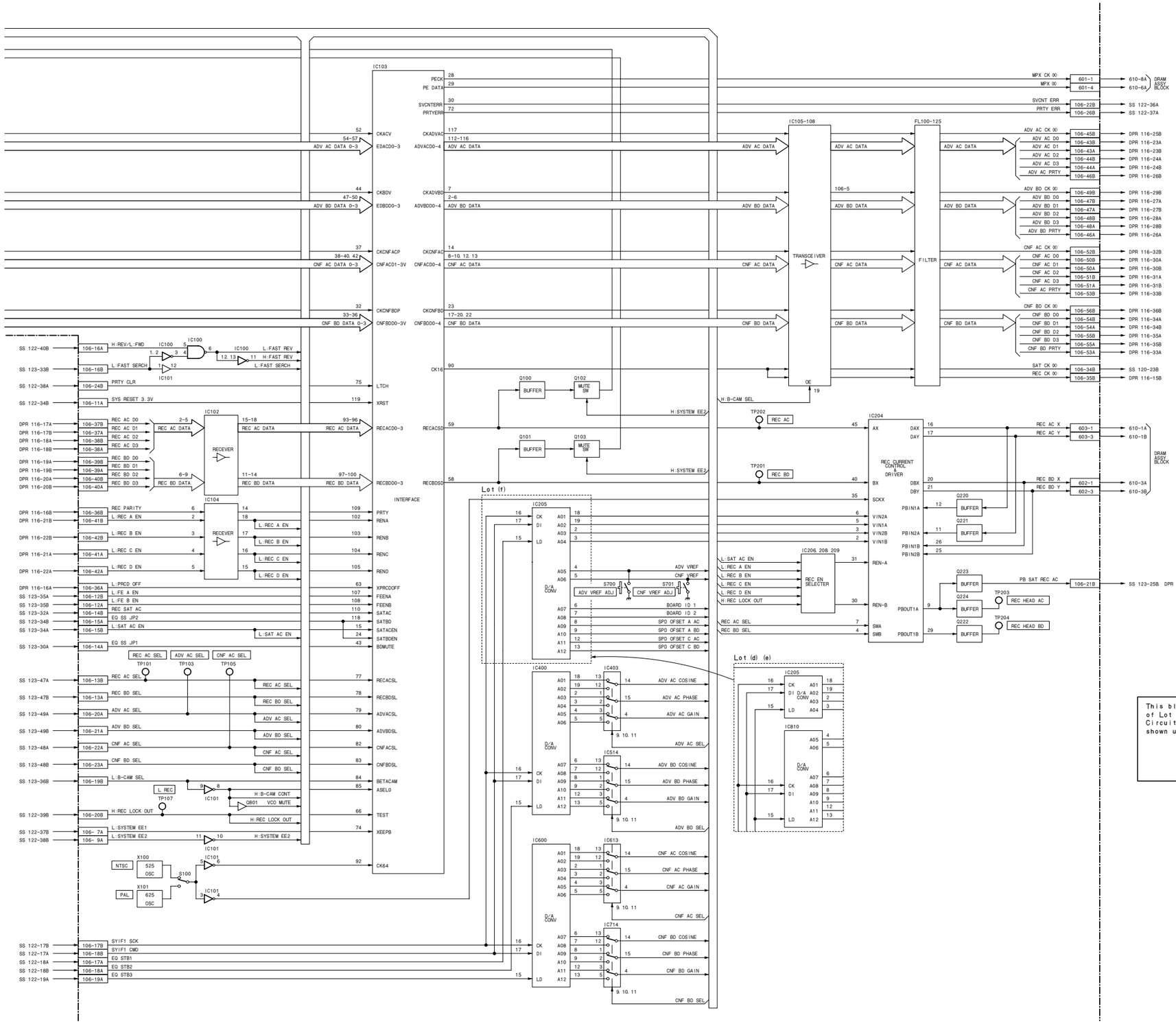

This block diagram corresponds to the production lots of Lot No.002 and higher.
Circuit sections that any midway change occured are shown using the abbreviation mentioned below.

abbrev.	Lot No.	Beard No.
Lot (d)	002-005	1-648-536-15
Lot (e)	006-123	1-648-536-16
Lot (f)	124-	1-648-536-17

RF Processor
EQ-45
DVW-A500/500
DVW-A500P/500P

[CIRCUIT DESCRIPTION OF EQ-45 BOARD] (Lot No. 302 through 001)

EQ-45 board is an RF processor board that converts the REC data sent from DPR-36 board into a REC RF signal and sends it to the drum and that converts the PB RF signal sent from the drum into PB data and sends it to DPR-36 board.

The recording process is described below.
The two groups of parallel REC data ("REC AC D0 through D3", and "REC BD D0 through D3") that are sent from DPR-36 board to EQ-45 board are converted each into serial data in the interface IC (IC103) and sent through a REC driver (IC204) to the head drum.
The REC driver controls the REC currents of each head according to the command from SS-52 board.
In addition to the REC data, the REC ENABLE signals for each head are also sent from DPR-36 board to EQ-45 board.
The select signals for each head (including flying erase heads) are also sent from SS-52 board.
These signals are multiplexed in the interface IC, and the encoded "MPX" signal is sent to the head drum.
The MPX signal is decoded in the head drum and used for switching each REC, PB, and ERASE head amplifier.
"SYSTEM EE1" and "SYSTEM EE2" mode signals are sent from SS-52 board to EQ-45 board.
These are the mode for diagnosis execution.
For the "SYSTEM EE1" mode, the REC data sent from DPR-36 board is bypassed in the interface IC and sent back to DPR-36 board as PB data.
For the "SYSTEM EE2" mode, the REC RF signal (serial REC data) converted by the interface IC is bypassed by switching Q101 through Q104 and input to PB equalizer IC. This enables the circuit on EQ-45 board to be tested.

Next, the playback process is described below.
The PB RF signal that is played back by each PB head and passed through each head amplifier is sent from the head drum to EQ-45 board.
The signals of heads A and C, and heads B and D, that are switched every time the drum rotates by one half, can be transmitted using the same signal line, respectively.
Therefore, the lines required for the PB RF signal transmission are four pairs of "ADV AC", "ADV BD", "CNF AC", and "CNF BD".
In the Betacam tape PB mode, each head amplifier in a digital system is turned off.
Therefore, the PB RF signals of Betacam PB heads Y-A and Y-B use the "ADV AC" line in common.
The PB RF signals of heads C-A and C-B use the "ADV BD" line in common.
The PB RF signals input to EQ-45 board are sent each to PB equalizer IC (IC401, IC501, IC601, or IC701) for VCA, amplitude equalization, and phase equalization.
An envelope is then detected.
In the Betacam tape PB mode, the "PB Y" and "PB C" RF signals that are input through "ADV AC" and "ADV BD" lines to the PB equalizers are output each via only a VCA circuit and sent to DM-89 board (Betacam PB demodulator board).

The RF signal output from each PB equalizer branches into two paths.
One is sent to A/D converter (IC802, IC804, IC902, or IC904).
The another is low-frequency compensated and amplitude limited using a quantizing feedback (QFB) circuit, then sent to the PLL IC.
In consideration of the tape speed information, the PLL IC extracts a PB clock from the input RF signal and sends the clock signal to the A/D converter mentioned above and VITERBI IC (IC805 or IC905).
The A/D converter is required for the VITERBI processing that is executed in the VITERBI IC in the next stage.
The A/D data of the RF signal output from the A/D converter is input to the VITERBI IC, where a regeneration of the bit is executed by a VITERBI system.
The data is then converted into 4-bit parallel data and sent to the interface IC (IC103) together with the clock signal.
In the interface IC, parity data is added to the data sent from each VITERBI IC.
Four groups of PB data ("ADV AC D0 through D3", "ADV BD D0 through D3", "CNF AC D0 through D3", and "CNF BD D0 through D3") are then output together with their parity data and clock signals and sent to DPR-36 board.

CR5-1BPS PB mode (DVW-A500P ONLY)

① TP103 (C-1) PB mode
TP104 (C-1) PB mode
TP819 (SS-52) (J-1) (TRIG)

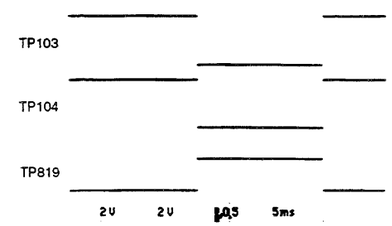

② TP401 (E-1) PB mode (B/W LIMIT OFF)
TP103 (C-1) (TRIG)

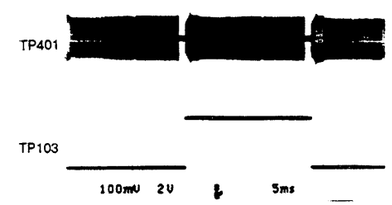

Measurement Condition
INPUT SIGNAL : 100% COLOR BARS
MODE : PB mode
: REC mode
TAPE : ZR5-1P
: CR5-1BPS

ZR5-1P PB mode

① TP103 (C-1) PB mode
TP104 (C-1) PB mode
TP819 (SS-52) (J-1) (TRIG)

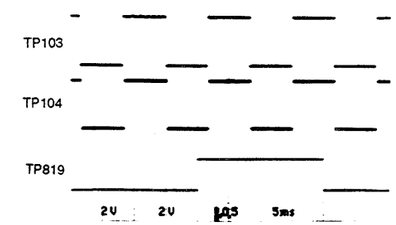

③ TP423 (E-1) PB mode (Lot No. 306 thur. 001)
TP423 (F-3) PB mode (Lot No. 302 thur. 306)
TP103 (C-1) (TRIG)

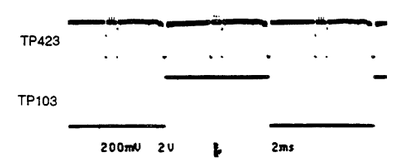

④ TP808 (G-4) PB mode
TP103 (C-1) (TRIG)

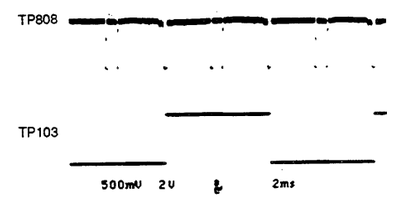

REC mode

⑤ TP101 (D-1) REC mode
TP102 (C-1) REC mode
TP819 (SS-52) (J-1) (TRIG)

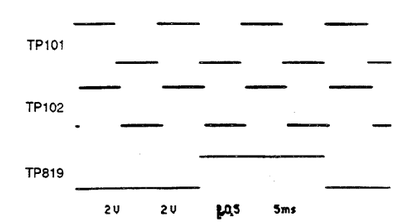

⑥ TP202 (F-6) REC mode
TP101 (D-1) (TRIG)

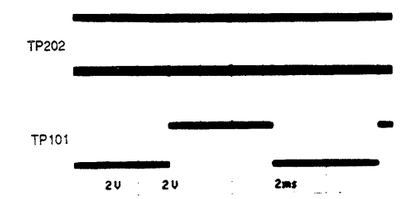

⑦ TP203 (F-1) REC mode
TP204 (E-1) REC mode
TP103 (C-1) (TRIG)

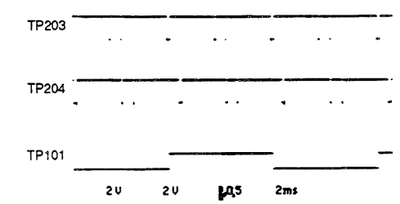

EQ-45 Board -A Side- (Lot No. 302 thur. 306)

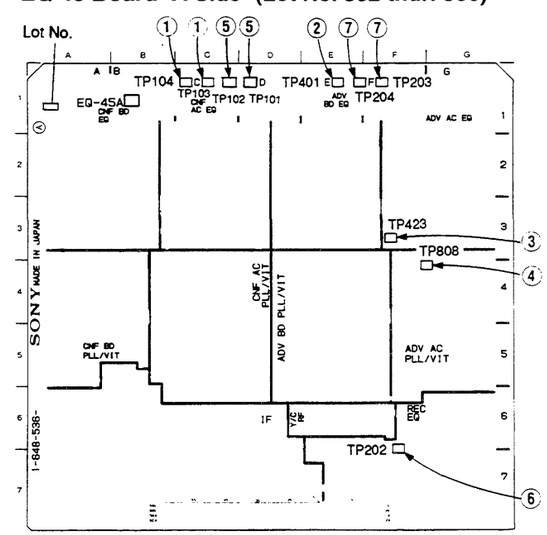

EQ-45 Board -A Side- (Lot No. 306 thur. 001)

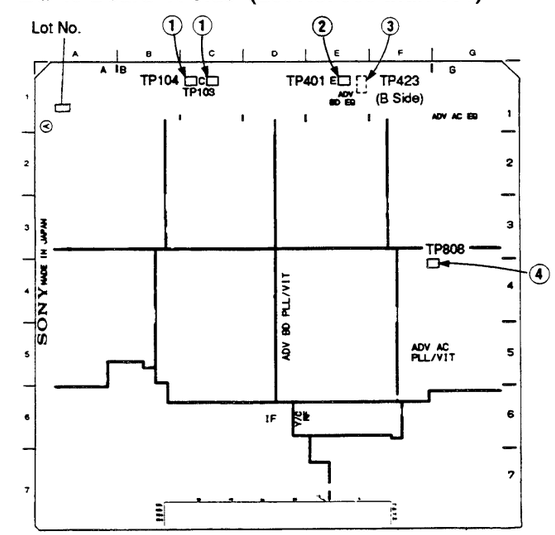

DVW-A500P (EK):	S/N 10001 through 21322
DVW-A500P (UC):	S/N 10001 through 10338
DVW-A500 (J):	S/N 10001 through 12868
DVW-A500 (UC):	S/N 10001 through 18632
DVW-500P (EK):	S/N 10001 through 16615
DVW-500P (UC):	S/N 10001 through 10215
DVW-500 (J):	S/N 10001 through 10363
DVW-500 (UC):	S/N 10001 through 13244

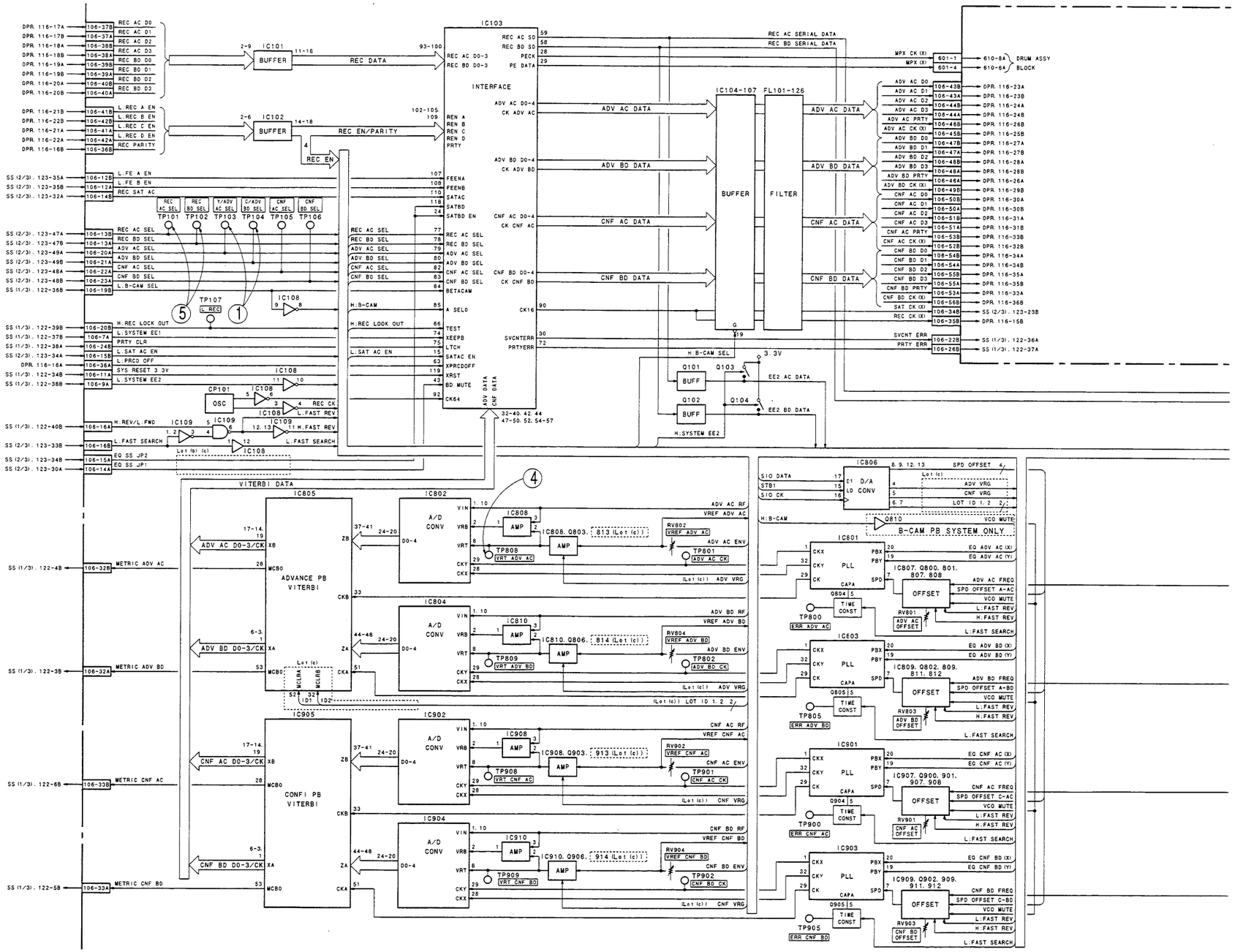

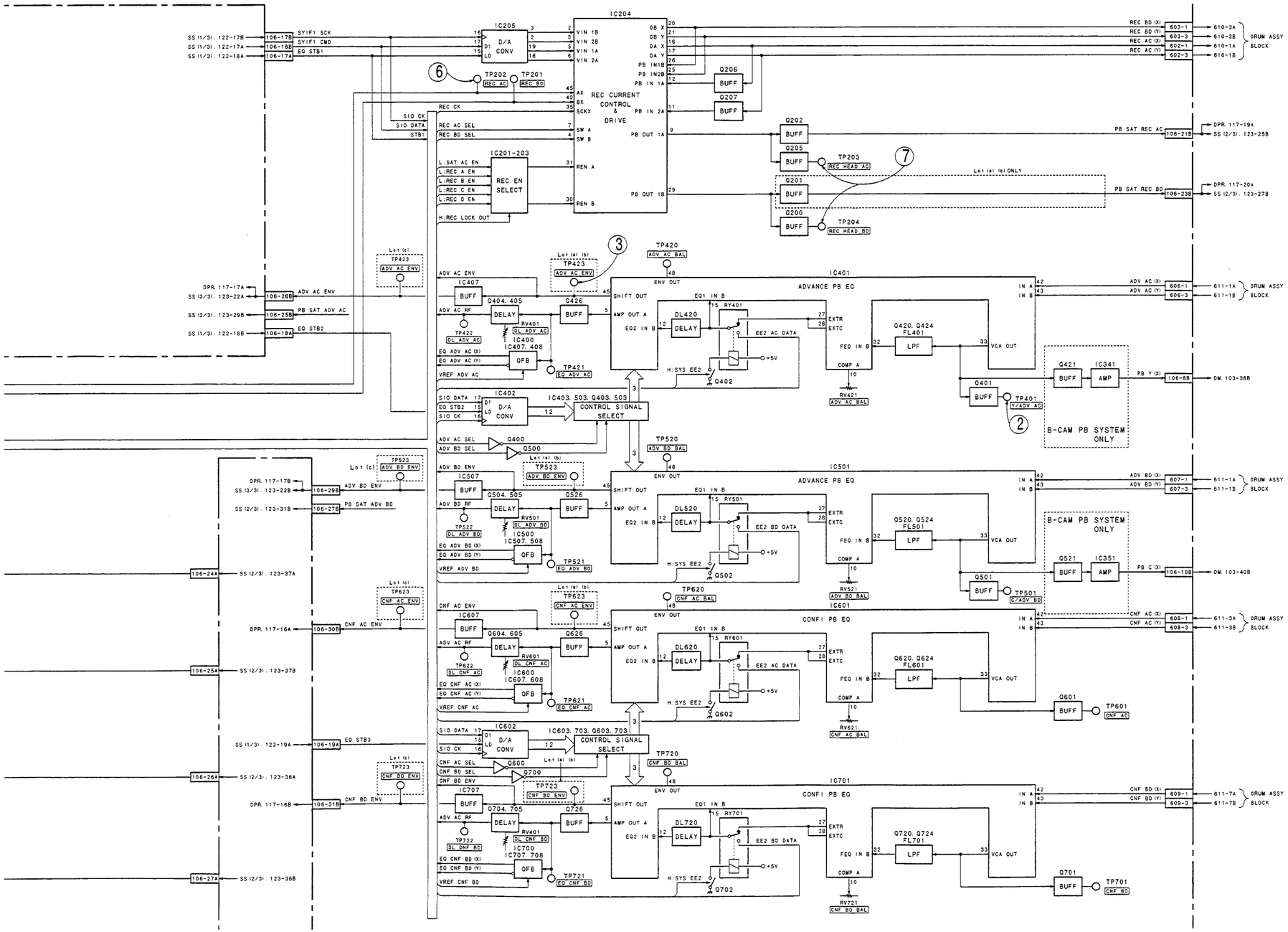

This block diagram corresponds to the production lots of Lot No.302 and higher.
Circuit sections that any midway change occured are shown using the abbreviation mentioned below.

abbrev.	Lot No.	Board No.
Lot (a)	302	1-648-536-11
Lot (b)	303-306	1-648-536-12/22
Lot (c)	307-001	1-648-536-13/23

RF Processor
EQ-45
DVW-A500/500
DVW-A500P/500P

[CIRCUIT DESCRIPTION OF CUE-1 BOARD]

CUE-1 board is a CUE/LTC processor board that records and reproduces the CUE and LTC signals recorded on the longitudinal tracks of the tape. CUE-1 board also mounts generator circuits of the AC bias and erase current required for recording these signals.

The CUE signal processing circuit is first described below.
The CUE signal is also called a CUE AUDIO signal because an audio signal is usually used as the CUE signal. The CUE signal is input from the "CUE" connector of the "AUDIO INPUT" connector group on the rear panel. The input CUE signal is sent to CUE-1 board, adjusted in level according to the "CUE REC GAIN" instruction (DC voltage) from the control panel, and branches into two paths. One is sent through a noise filter amplifier (IC106) to PB/EE select switch (Q103 and Q104) as an EE signal. The another is passed through a REC equalizer amplifier (IC107), then bias trap as a REC signal, where a bias current is added. By an AC bias method, the signal is then recorded on the tape via the CUE head (AUDIO CH2 head).
The signal heads used on the longitudinal tracks are used in common for REC and PB modes. Both ends of a head's wiring are connected to REC and PB amplifiers via muting circuits, functioning as REC and PB heads when the muting circuit on the opposite side is connected to ground according to the REC and PB modes.
In the case of analog Betacam tape, an AUDIO CH2 signal is recorded on the CUE AUDIO track position, and an AUDIO CH1 track is provided in parallel with the CUE AUDIO track. Therefore, two-channel audio heads are provided, and the AUDIO CH2 head is used in common for digital tape REC/PB operation and Betacam tape PB operation.
For tape reproduction, CUE and AUDIO CH2 signals can be reproduced halfway by a same circuit, and an equal circuit is used in AUDIO CH1 during corresponding section.
That is, the signal reproduced by the head is made flat in frequency response using a head tuning circuit and PB equalizer circuit, and passed through the audio attenuator and slow equalizer controlled by the MPU on APR-1 board. If the PB signals are CH1 and CH2 Betacam PB audio signals, they are sent to AP-28 board from here. If the PB signal is a CUE signal, it is sent to an exclusive PB processing circuit. When the LTC is put into the REC mode while the CUE signal is reproduced (during editing), an LTC crosstalk cancel signal is added to the CUE signal via the PB equalizer amplifier (IC111).
In the exclusive PB processing circuit, the CUE signal is compensated in the undulation of a low-frequency response using a contour effect compensator (IC112 and IC113). The compensated signal is then adjusted in level according to the "CUE PB GAIN" instruction (DC voltage) from the control panel, and sent through a noise filter amplifier (IC108) to PB/EE select switch (Q103 and Q104), where a PB or EE signal is selected according to the command from the MPU on APR-1 board.
The selected signal branches into two paths. One is passed through the output circuit on CUE-1 board as a CUE OUT signal, and output from the "CUE" connector of the "AUDIO OUTPUT" connector group on the rear panel. The another is sent to APR-1 board as a CUE MONITOR signal.

Moreover, a "PEAK DETECT" detector circuit (IC117) is provided. This detector circuit converts the peak level of the CUE signal into a DC voltage and outputs it. The output voltage is sent to the MPU on APR-1 board and used for the CUE level display of an audio level meter.

An LTC signal processing circuit is described next.
In case of the recording of an external time code generator signal, the time code signal input from the "TIME CODE IN" connector is sent to CUE-1 board, converted into a TTL level using IC801, and sent to the LTC PROCESSOR IC on SS-52 board as an "LTC SOURCE" signal. The output signal of the LTC PROCESSOR IC is sent back to CUE-1 board as an "REC LTC" signal, passed through an LTC amplifier (IC400), and recorded on the tape by the TC head.
In case of the recording of an internal time code generator signal, the time code signal generated in the LTC PROCESSOR IC on SS-52 board is sent to CUE-1 board as a "REC LTC" signal and recorded on the tape via the same path as described above.
In the LTC PB mode, the signal reproduced by the TC head is passed through a PB equalizer amplifier (IC404), then a low-pass filter and high-pass filter controlled by the MPU on APR-1 board, and shaped in a waveform using IC407. The PB signal is then sent to the LTC PROCESSOR IC on SS-52 board as a "PB LTC" signal. The signal read by the LTC PROCESSOR IC is sent back to CUE-1 board as an "LTC OUT" signal and shaped in a waveform using IC701. The shaped signal is converted into a balanced signal using IC703 and output to the "TIME CODE OUT" connector.

Lastly, an AC bias/erase current generator circuit is described below.
IC500 is a common oscillation source for bias and erase. It always oscillates a 4.19 MHz signal by a crystal oscillator (X500). The oscillation output signal is frequency-divided and turned on and off using IC502. Moreover, a bias drive control signal of 131 kHz is generated from the frequency-divided output signal by a circuit block consisting of IC501, IC505, and IC506, and an erase drive control signal of 44 kHz is generated from the frequency-divided output signal by a circuit block consisting of IC501, IC505, IC506, and IC508. Each drive circuit is controlled by the above-mentioned control signal to generate an AC current. However a full-erase circuit generates an AC current by a self-excited oscillator so as to produce a frequency most suitable for full erase.
The circuits described above are all turned on and off according to commands from the MPU on APR-1 board.

CUE-1 LEVEL DIAGRAM

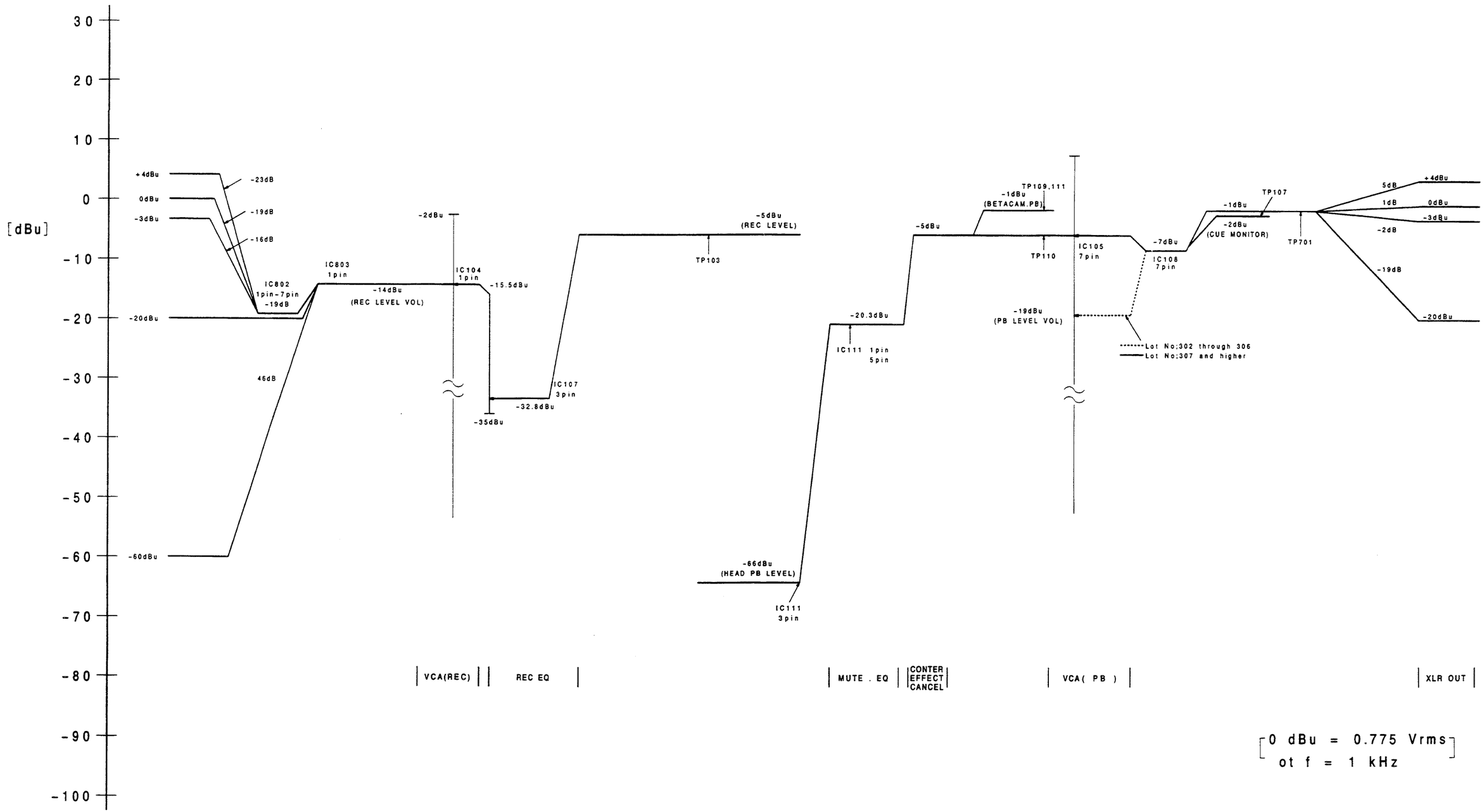

[0 dBu = 0.775 Vrms
ot f = 1 kHz]

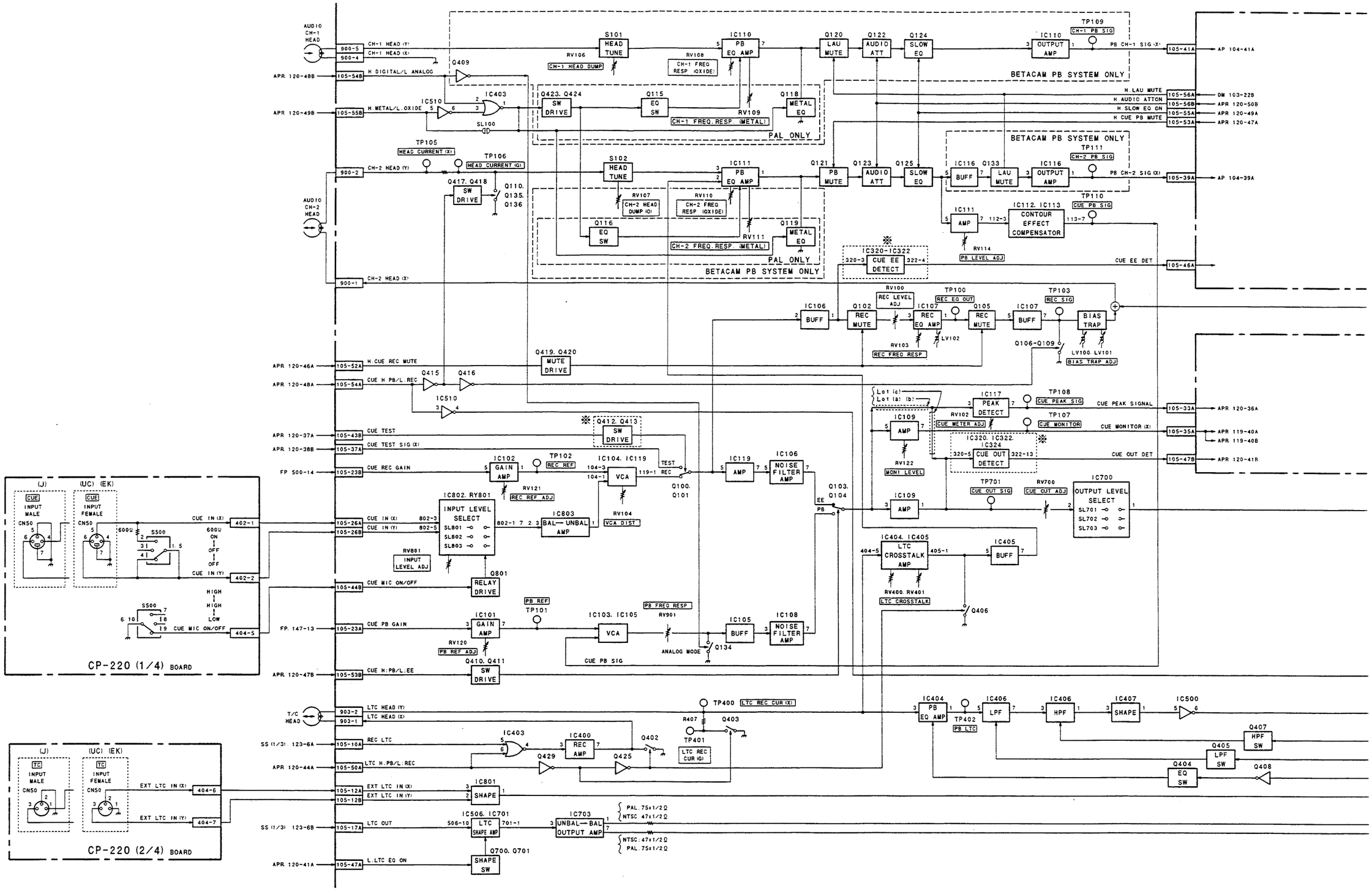
AUDIO CH-1 HEAD
AUDIO CH-2 HEAD
CH-1 HEAD (Y)
CH-1 HEAD (X)
H DIGITAL/L ANALOG
H METAL/L OXIDE
CH-2 HEAD (Y)
CH-2 HEAD (X)
S101 HEAD TUNE
S102 HEAD TUNE
IC110 PB EQ AMP
IC111 PB EQ AMP
Q120 LAU MUTE
Q122 AUDIO ATT
Q124 SLOW EQ
Q121 PB MUTE
Q123 AUDIO ATT
Q125 SLOW EQ
IC110 OUTPUT AMP
IC116 OUTPUT AMP
IC116 BUFF
Q133 LAU MUTE
TP109 CH-1 PB SIG
TP111 CH-2 PB SIG
PB CH-1 SIG (X)
PB CH-2 SIG (X)
BETACAM PB SYSTEM ONLY
PAL ONLY
H LAU MUTE
H AUDIO ATTON
H SLOW EQ ON
H CUE PB MUTE
CUE EE DET
IC111 AMP
IC112, IC113 CONTOUR EFFECT COMPENSATOR
TP110 CUE PB SIG
RV114 PB LEVEL ADJ
IC320-IC322 CUE EE DETECT
Q423, Q424 SW DRIVE
Q115 EQ SW
Q118 METAL EQ
Q116 EQ SW
Q119 METAL EQ
RV106 CH-1 HEAD DUMP
RV108 CH-1 FREQ RESP (OXIDE)
RV109 CH-1 FREQ. RESP. (METAL)
RV107 CH-2 HEAD DUMP (O)
RV110 CH-2 FREQ RESP (OXIDE)
RV111 CH-2 FREQ. RESP. (METAL)
TP105 HEAD CURRENT (X)
TP106 HEAD CURRENT (G)
Q417, Q418 SW DRIVE
Q110, Q135, Q136
IC510
IC403
SL100
Q409
Q419, Q420 MUTE DRIVE
Q415
Q416
IC106 BUFF
Q102 REC MUTE
RV100 REC LEVEL ADJ
IC107 REC EQ AMP
TP100 REC EQ OUT
Q105 REC MUTE
IC107 BUFF
TP103 REC SIG
BIAS TRAP
RV103 REC FREQ RESP
LV102
Q106-Q109
LV100, LV101
BIAS TRAP ADJ
H CUE REC MUTE
CUE H PB/L REC
Q412, Q413 SW DRIVE
CUE TEST
CUE TEST SIG (X)
CUE REC GAIN
IC102 GAIN AMP
TP102 REC REF
RV121 REC REF ADJ
IC104, IC119 VCA
RV104 VCA DIST
Q100, Q101
IC119 AMP
IC106 NOISE FILTER AMP
Q103, Q104
IC802, RY801 INPUT LEVEL SELECT
SL801
SL802
SL803
RV801 INPUT LEVEL ADJ
IC803 BAL—UNBAL AMP
Q801 RELAY DRIVE
CUE IN (X)
CUE IN (Y)
CUE MIC ON/OFF
CUE PB GAIN
IC101 GAIN AMP
TP101 PB REF
RV120 PB REF ADJ
Q410, Q411 SW DRIVE
IC103, IC105 VCA
RV901 PB FREQ RESP
ANALOG MODE
Q134
IC105 BUFF
IC108 NOISE FILTER AMP
CUE PB SIG
CUE H PB/L EE
IC117 PEAK DETECT
TP108 CUE PEAK SIG
RV102 CUE METER ADJ
TP107 CUE MONITOR
IC109 AMP
RV122 MONI LEVEL
IC320, IC322, IC324 CUE OUT DETECT
CUE PEAK SIGNAL
CUE MONITOR (X)
CUE OUT DET
TP701 CUE OUT SIG
RV700 CUE OUT ADJ
IC700 OUTPUT LEVEL SELECT
SL701
SL702
SL703
IC404, IC405 LTC CROSSTALK AMP
RV400, RV401 LTC CROSSTALK
IC405 BUFF
Q406
CUE PEAK SIGNAL
CUE MONITOR (X)
CUE OUT DET
APR 120-48B
APR 120-49B
APR 120-46A
APR 120-48A
APR 120-37A
APR 120-38B
FP 500-14
FP 147-13
APR 120-47B
APR 120-41A
AP 104-41A
DM 103-22B
APR 120-50B
APR 120-49A
APR 120-47A
AP 104-39A
APR 120-36A
APR 119-40A
APR 119-40B
APR 120-41B
CP-220 (1/4) BOARD
(J) (UC) (EK)
CUE INPUT MALE
CUE INPUT FEMALE
CN50
600Ω ON OFF
S500
HIGH LOW
CP-220 (2/4) BOARD
TC INPUT MALE
TC INPUT FEMALE
T/C HEAD
LTC HEAD (Y)
LTC HEAD (X)
REC LTC
LTC H.PB/L:REC
EXT LTC IN (X)
EXT LTC IN (Y)
LTC OUT
L.LTC EQ ON
IC403
IC400 REC AMP
Q429
Q425
Q402
TP400 LTC REC CUR (X)
R407
Q403
TP401 LTC REC CUR (G)
IC801 SHAPE
IC506, IC701 LTC SHAPE AMP
IC703 UNBAL—BAL OUTPUT AMP
Q700, Q701 SHAPE SW
PAL: 75x1/2Ω
NTSC: 47x1/2Ω
IC404 PB EQ AMP
TP402 PB LTC
IC406 LPF
IC406 HPF
IC407 SHAPE
IC500
Q407 HPF SW
Q405 LPF SW
Q404 EQ SW
Q408

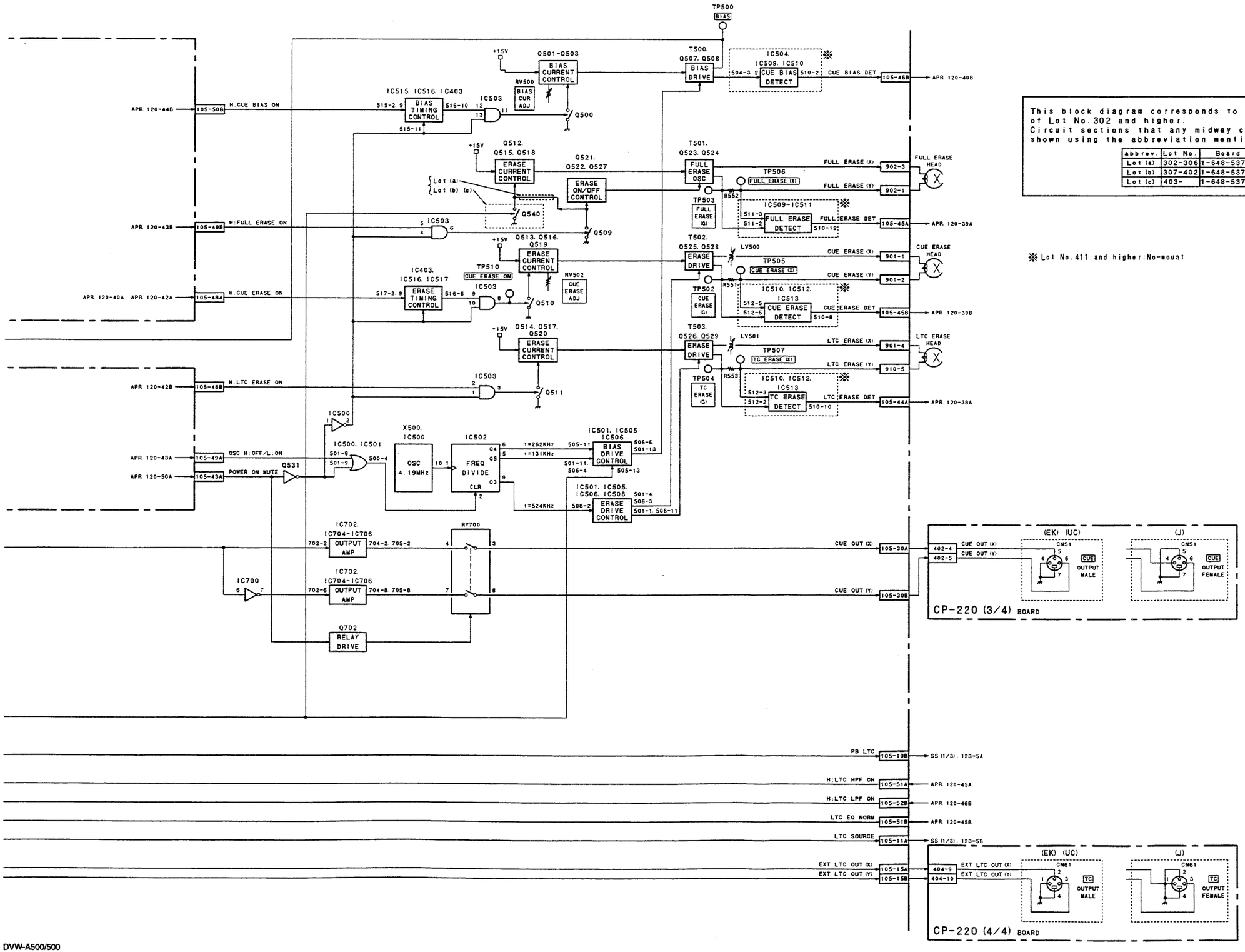

This block diagram corresponds to the production lots of Lot No.302 and higher.
Circuit sections that any midway change occured are shown using the abbreviation mentioned below.

abbrev.	Lot No.	Board No.
Lot (a)	302-306	1-648-537-11/31
Lot (b)	307-402	1-648-537-12/32
Lot (c)	403-	1-648-537-13/33

※ Lot No.411 and higher:No-mount

CUE/LTC Processor
CUE-1 CP-220
DVW-A500/500
DVW-A500P/500P

[CIRCUIT DESCRIPTION OF DM-89 BOARD]

DM-89 board is a Betacam PB demodulator board that equalizes the RF signal reproduced from an analog Betacam tape according to the type and speed of the tape, demodulates it to a video signal, and detects a dropout.

The outline of Betacam tape reproduction is first described below.
The Y RF and C RF signals reproduced from the Y and C (chroma) tracks of an analog Betacam tape are sent through the VCA circuit on EQ-45 board to DM-89 board. On DM-89 board, PB Y and PB C signals are equalized, demodulated, and dropout detected by their respective circuit. The resultant signals are sent to TBC-24 board.
When the analog Betacam tape is reproduced by a digital Betacam VTR, the relative speed of the rotary head to the tape increases about 9 % depending on the diameter of the head drum. Therefore, the signal recorded on the helical track is reproduced in the form that its time base is compressed about 9 %. The FM carrier frequency and deviation also significantly vary depending on the metal tape and oxide tape. During shuttle PB, the PB frequency decreases in the FF mode and increases in the REW mode. On DM-89 board, a signal is properly processed under these conditions, and the same performance as the conventional one can be obtained.

The outline of each circuit is described next. PB Y and PB C systems are provided. In the PB Y system, a high-speed search compensator is added so that a luminance signal can be reproduced in the high-speed search mode. Therefore, the PB Y system is described.
A normal PB circuit is explained below. The PB Y RF signal sent to DM-89 board is attenuated to 2/5 and sent to the input circuit block in IC101. For a metal tape, the input RF signal is attenuated to 1/2 and output via a VCA circuit. Select switches are incorporated into the input stage of this circuit block, and reference marker signals corresponding to the PB RF frequency whose time base is compressed on the metal tape can be input for a test.
The PB Y RF signal passed through a VCA circuit is sent to a cosine equalizer circuit. This circuit is an amplitude equalizing circuit that can correct the amplitude characteristic without changing the phase characteristic by combining a delay line and differential amplifier. The signal that has been equalized in amplitude is passed through an RF low-pass filter, equalized in phase using two-stage phase equalizer circuits, and sent to a video switch (IC102). The RF low-pass filter and phase equalizer circuits are provided in parallel for a metal tape and oxide tape and selected using the video switch (IC102).
After that, the signal is equalized into Y main and Y sub frequency characteristics by the cosine equalizer circuit in the next stage. The Y main frequency characteristic is a flat characteristic that attaches importance to the frequency characteristic. The Y sub-frequency characteristic is a characteristic that attaches importance to the counter measures for overmodulation.
For the PB Y RF signal whose basic equalization has been completed, Y MAIN RF and Y SUB RF signals are sent to the demodulator circuit system, and a Y MAIN RF signal is sent to the dropout detector circuit system.
The Y MAIN RF and Y SUB RF signals sent to the demodulator circuit system enter into an overmodulation compensator (OMC)(IC501) and are mixed via a limiter circuit. The mixed Y RF signal is sent to a demodulator (IC501), where the carrier frequency is multiplied, converted from a frequency into a voltage, then de-emphasized. The resultant signal is sent to the low-pass filter in the next stage to eliminate a frequency-multiplied carrier and demodulated into a video signal. The demodulated Y signal is clamped and nonlinear de-emphasized using IC503, then sent to TBC-24 board as a "Y DEMOD" signal.
The Y MAIN RF signal sent to the dropout detector circuit system is input through a dropout equalizer to dropout detector circuit block IC101, where the signal is compared with the reference voltage. If the signal is less than the reference voltage, a dropout is judged to have occurred. A dropout detection pulse ("Y DO PLS") is then sent to TBC-24 board and other blocks.
The outline of the normal PB circuit is as described above. The normal PB operation indicates the PB range of -1 to +3 times the normal speed in which noiseless PB operation can be performed using a DT function. In this normal PB operation, various corrections for a signal are performed according to the type of a tape. However, the F/V-conversion gain and de-emphasis characteristic of a demodulator vary depending on the tape speed information. The demodulator can be thus used in PB modes other than normal PB.
During shuttle PB, the PB frequency decreases in the FF mode and increases in the REW mode. In the high-speed search mode, especially, in the high-speed FF mode, the FM carrier frequency and deviation decrease. Consequently, the demodulated video signal level decreases, and the waveform is distorted. This makes it difficult to reproduce the video information. Therefore, a high-speed search compensator mentioned below is added in the PB Y system so that a luminance can be reproduced in the high-speed search mode. Each signal is compensated according to the type and speed of a tape.
"SEARCH SW" gate which consists of three blocks of RF switches is provided. The signal whose only amplitude has been equalized passes the gate via a "FLAT" switch in the high-speed REW mode. The signal that has been passed through a "SEARCH LPF" filter passes the gate via a "LOW" switch in the high-speed FF mode. And the signal that has been equalized passes the gate via a "MID" switch in the middle search speed mode. The signal that has passed the gate is emphasized according to the tape speed by a "SEARCH TUNE" circuit and input to the demodulator (IC501) and dropout detector circuit (IC101) instead of a normal PB signal by the selection of RF switches. In the high-speed FF mode, the frequency-multiplied carrier elimination filter in the stage following the demodulator is also changed to "SEARCH LPF".

Lastly, a control system is described below.
Principal controls for each circuit block corresponding to the type and speed of a tape are performed by the MPU (IC906) on DM-89 board under the command ("SYIF2 CMD") of the serial communication from the main CPU on SS-52 board. The main controls are as follows: METAL/OXIDE selection, each selection in the high-speed search compensator, and analog control of VCAs, cosine equalizers, OMCs, and dropout detection reference value via D/A converters (IC904 and IC905). The backup operation by an EEP-ROM (IC908) is also performed.

①TP101(F-7) PB mode
TP4(E-1)(TRIG)

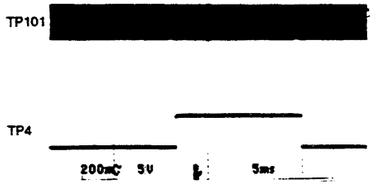

②TP102(E-6) PB mode
TP4(E-1)(TRIG)

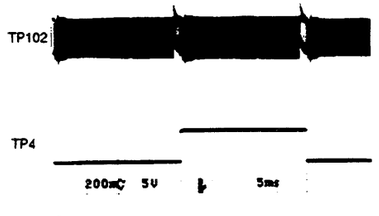

③TP103(E-6) PB mode
TP4(E-1)(TRIG)

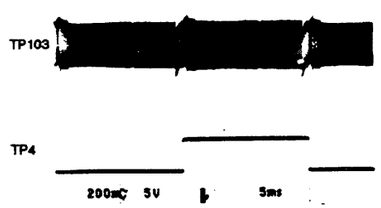

④TP104(F-5) PB mode
TP4(E-1)(TRIG)

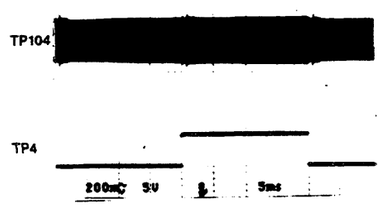

⑤TP2(E-1) PB mode
TP4(E-1)(TRIG)

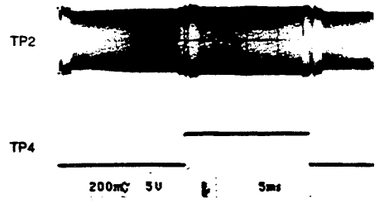

⑥TP3(E-1) PB mode
TP4(E-1)(TRIG)

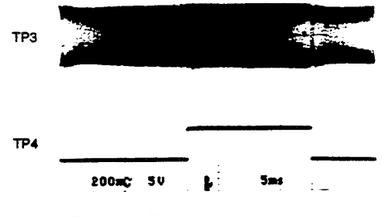

⑦TP105(G-4) PB mode
TP4(E-1)(TRIG)

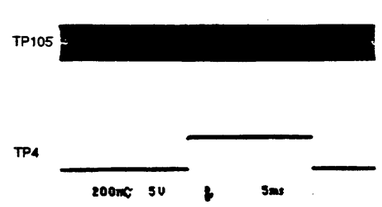

⑧TP501(F-4) PB mode
TP4(E-1)(TRIG)

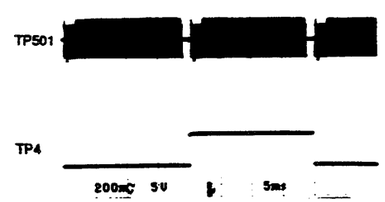

⑨TP502(G-3) PB mode
TP4(E-1)(TRIG)

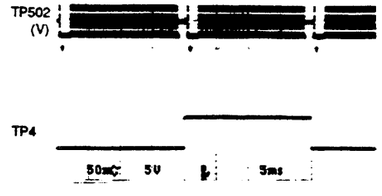

⑩TP504(F-3) PB mode

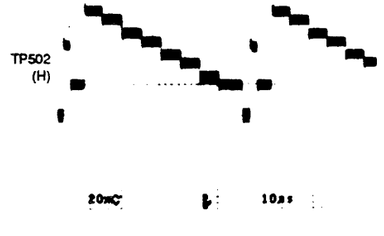

⑪TP505(E-2) PB mode

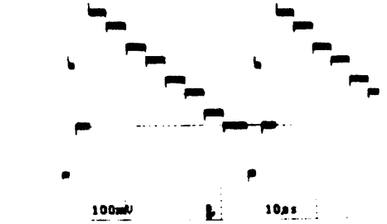

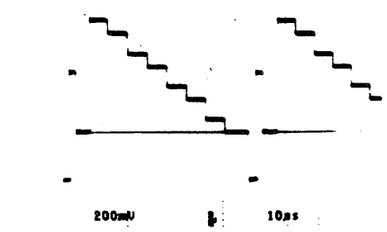

⑫TP1(E-1) PB mode

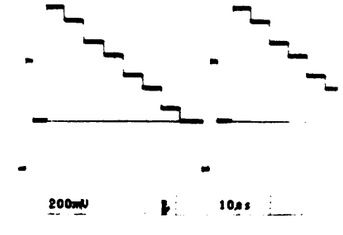

⑬TP305(C-4) PB mode
TP5(D-1)(TRIG)

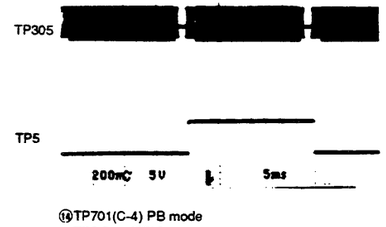

⑭TP701(C-4) PB mode
TP5(D-1)(TRIG)

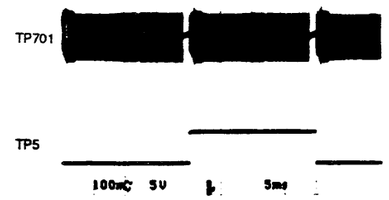

⑮TP8(C-1) PB mode

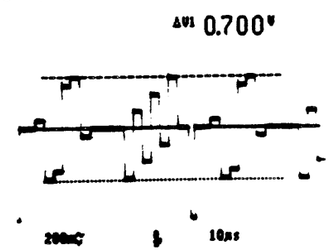

⑯TP202(G-6) × −3 SPEED mode
TP4(E-1)(TRIG)

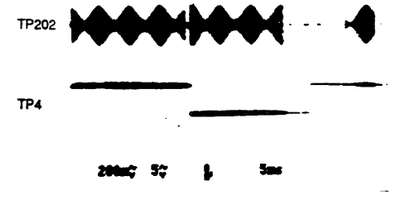

(G-6) PB mode
TP4(E-1)(TRIG)

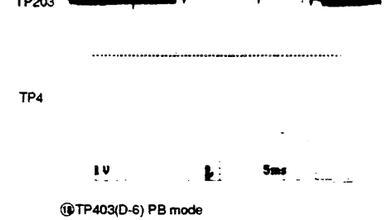

⑱TP403(D-6) PB mode
TP4(E-1)(TRIG)

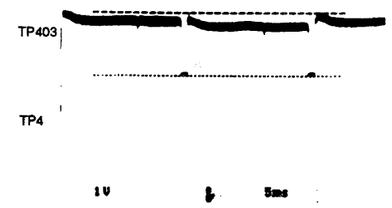

Measurement Condition
MODE : PB mode
: × −3 SPEED mode
TAPE : CR5-1BPS

DM-89 Board -A Side-

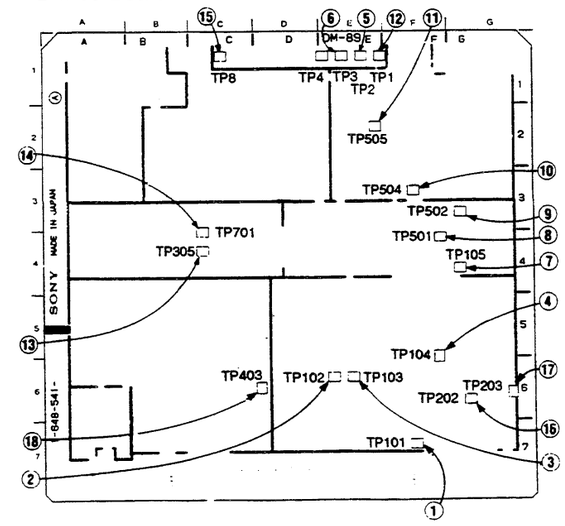

DVW-A500P S/N ; 10001 through 10250 (EK)
DVW-A500P S/N ; 10001 through 10030 (UC)
DVW-A500 S/N ; 10001 through 10010 (J)
DVW-A500 S/N ; 10001 through 10110 (UC)

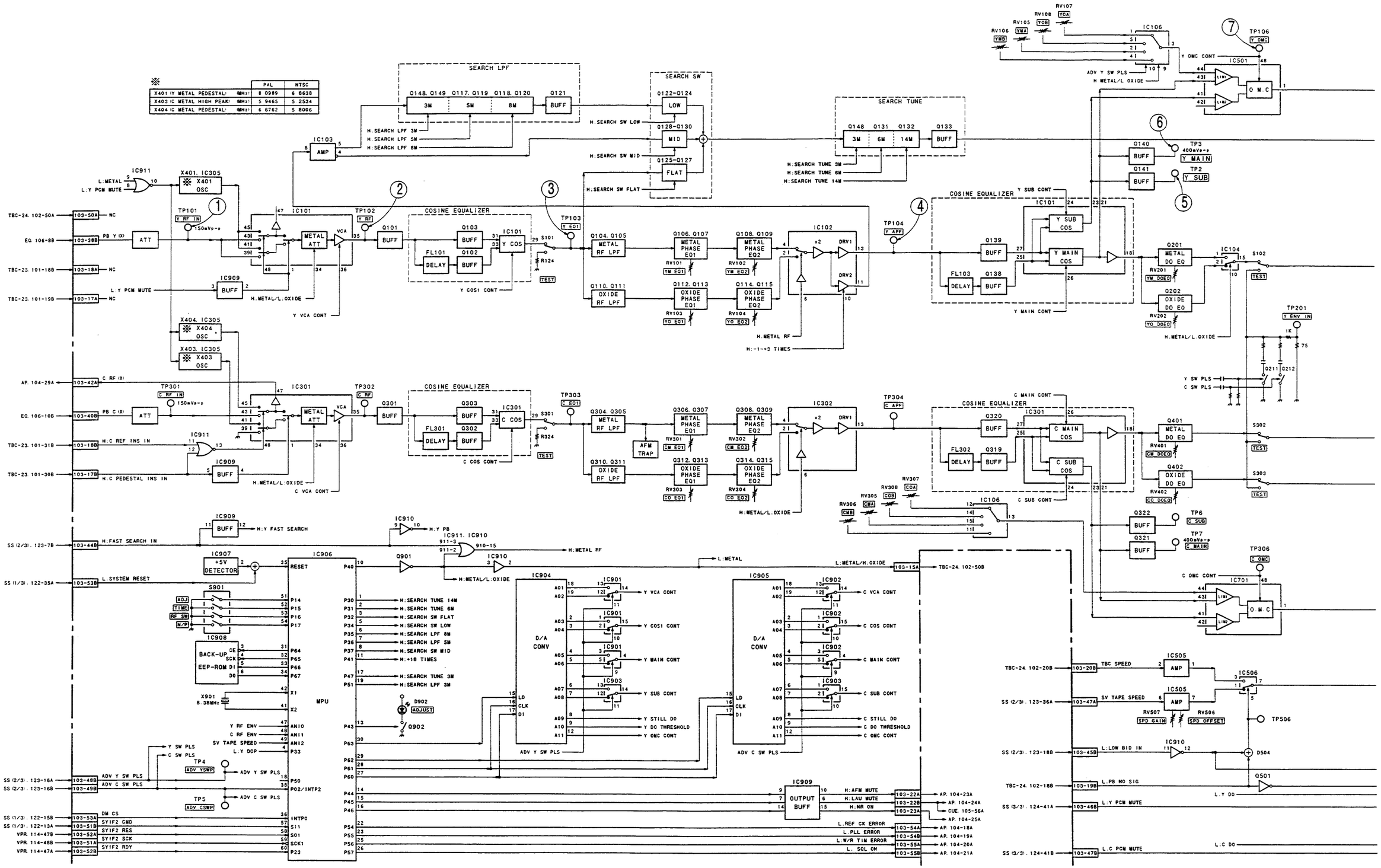

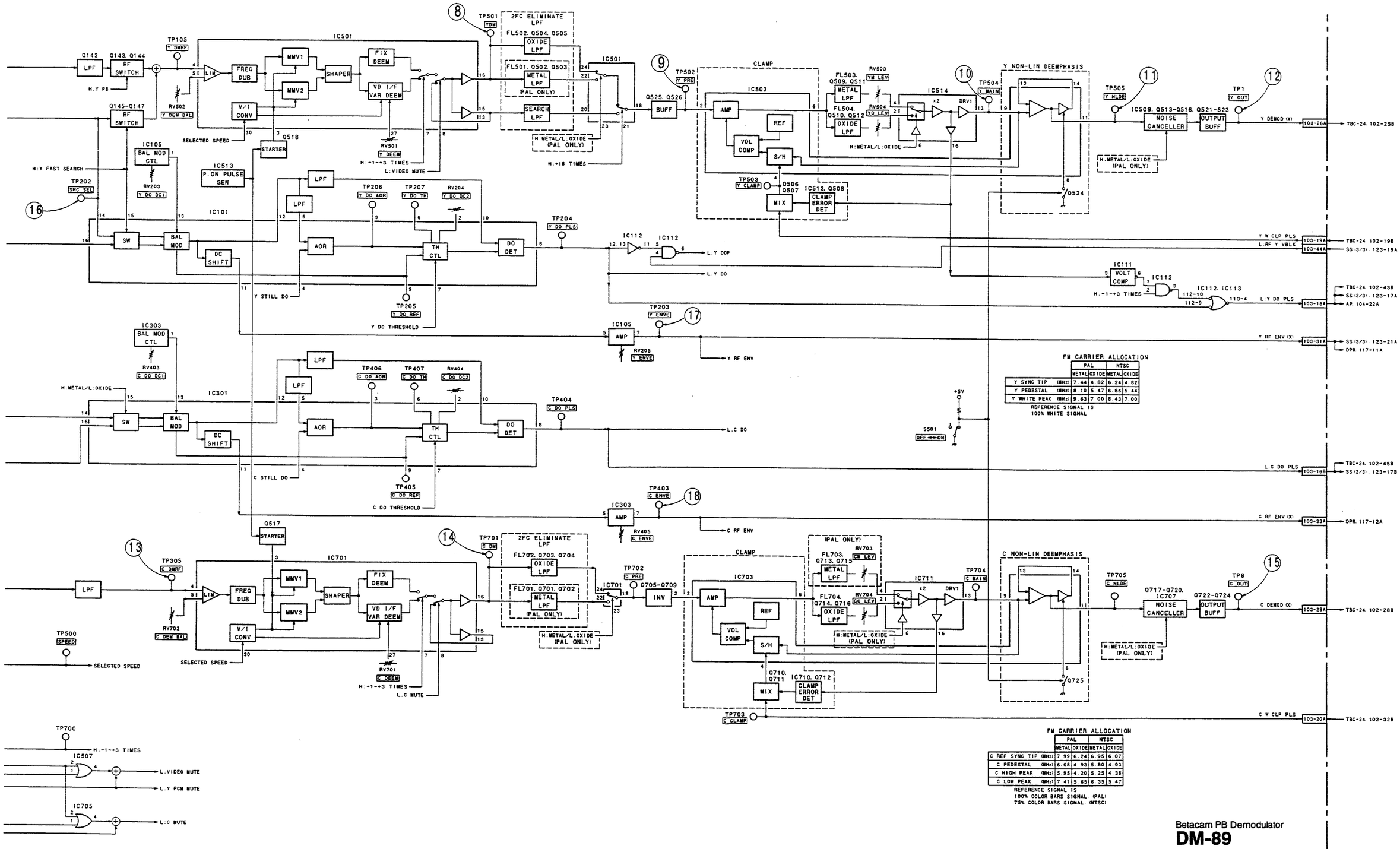

FM CARRIER ALLOCATION

	PAL METAL	PAL OXIDE	NTSC METAL	NTSC OXIDE
Y SYNC TIP (MHz)	7.44	4.82	6.24	4.82
Y PEDESTAL (MHz)	8.10	5.47	6.86	5.44
Y WHITE PEAK (MHz)	9.63	7.00	8.43	7.00

REFERENCE SIGNAL IS 100% WHITE SIGNAL

FM CARRIER ALLOCATION

	PAL METAL	PAL OXIDE	NTSC METAL	NTSC OXIDE
C REF SYNC TIP (MHz)	7.99	6.24	6.95	6.07
C PEDESTAL (MHz)	6.68	4.93	5.80	4.93
C HIGH PEAK (MHz)	5.95	4.20	5.25	4.38
C LOW PEAK (MHz)	7.41	5.65	6.35	5.47

REFERENCE SIGNAL IS
100% COLOR BARS SIGNAL (PAL)
75% COLOR BARS SIGNAL (NTSC)

Betacam PB Demodulator
DM-89
DVW-A500/A500P

Lot No ; 305 and higher

DVW-A500P	S/N ; 10251 and higher (EK)
DVW-A500P	S/N ; 10031 and higher (UC)
DVW-A500	S/N ; 10011 and higher (J)
DVW-A500	S/N ; 10111 and higher (UC)
DVW-A510/A510P	; from start
DVW-CA510/CA510P	; from start

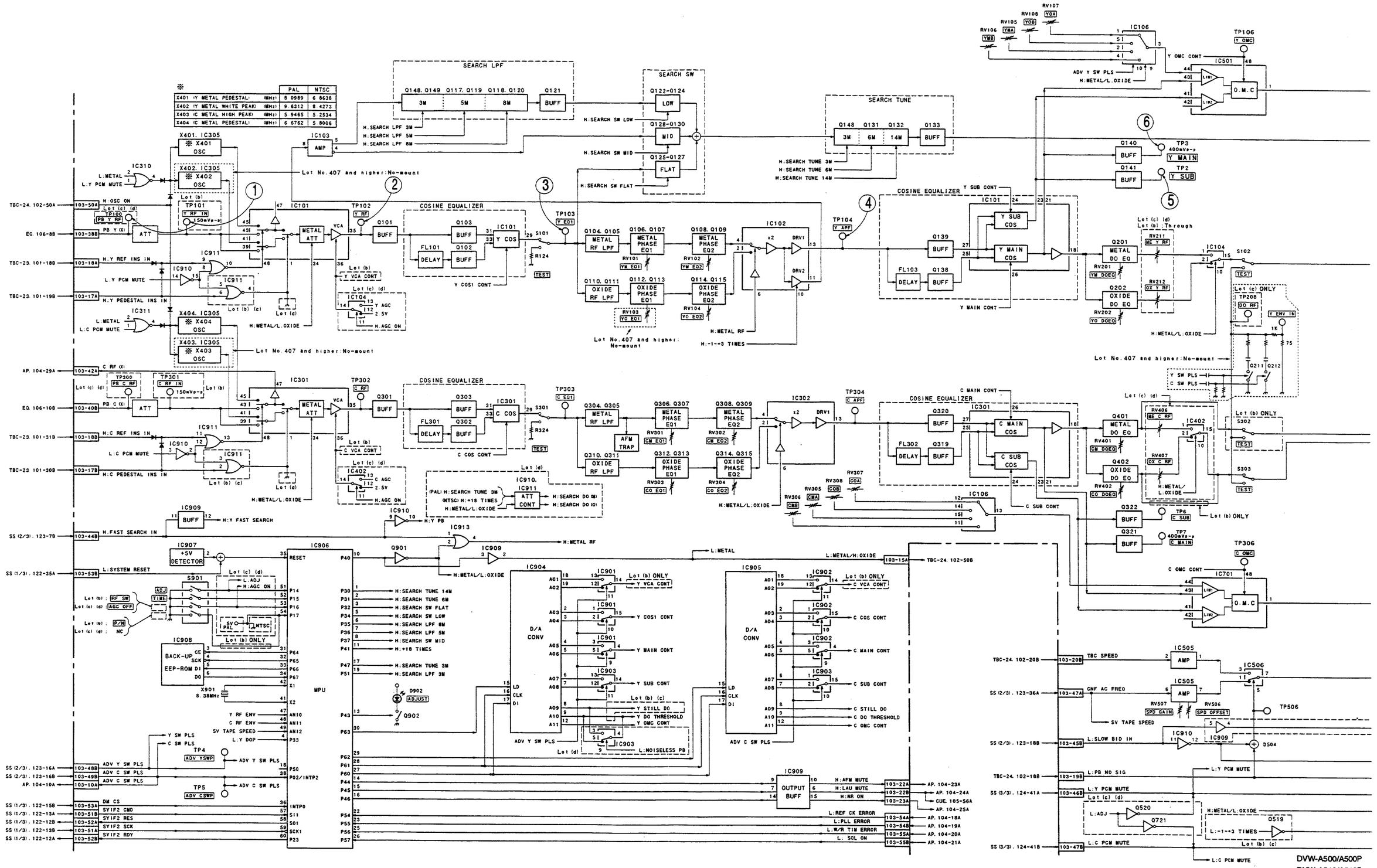

DVW-A500/A500P
DVW-A510/A510P
DVW-CA510/CA510P

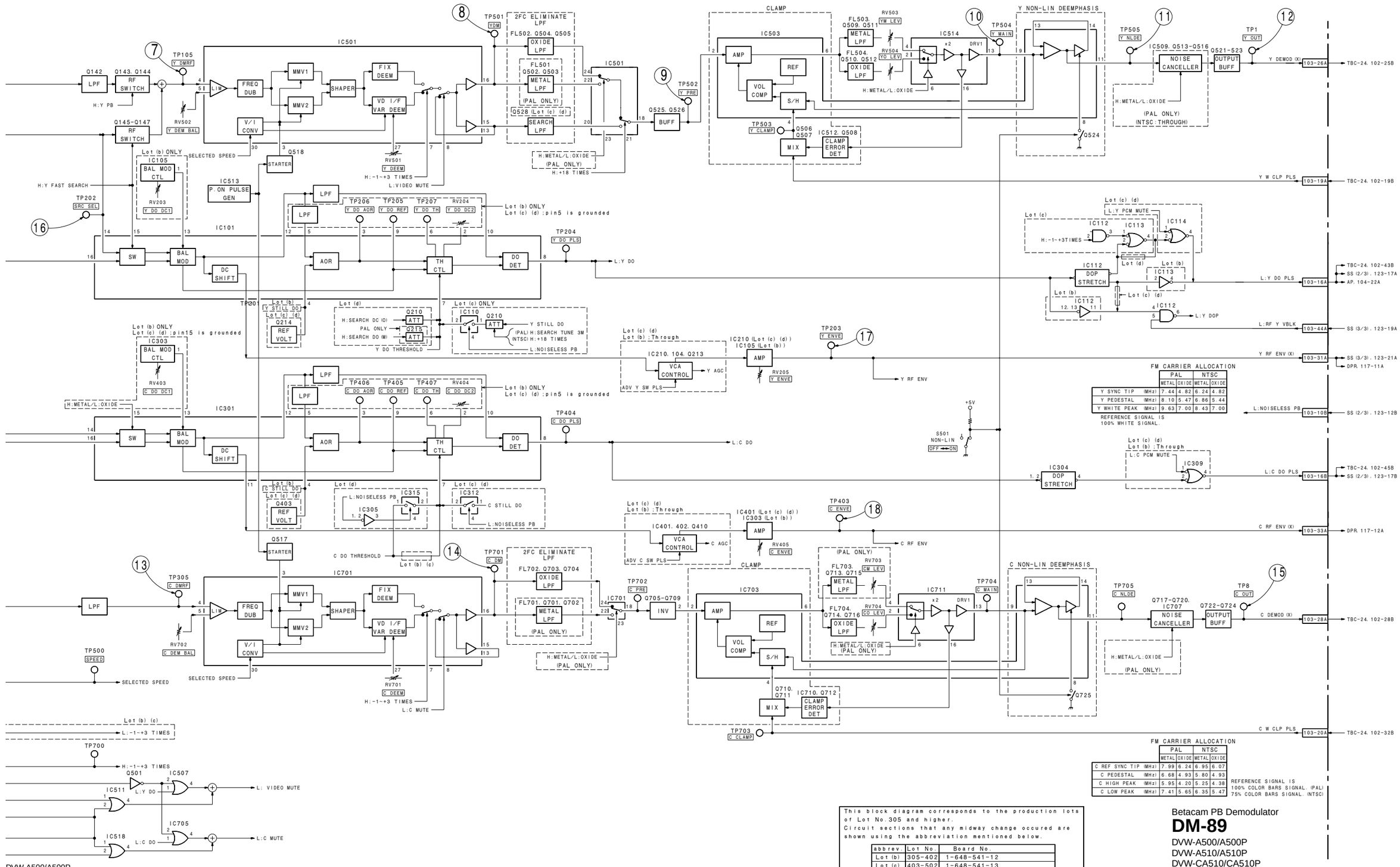

This block diagram corresponds to the production lots of Lot No.305 and higher.
Circuit sections that any midway change occured are shown using the abbreviation mentioned below.

abbrev.	Lot No.	Board No.
Lot (b)	305-402	1-648-541-12
Lot (c)	403-502	1-648-541-13
Lot (d)	503-	1-648-541-14. 15. 16. 17. 18

Betacam PB Demodulator

DM-89

DVW-A500/A500P
DVW-A510/A510P
DVW-CA510/CA510P

[CIRCUIT DESCRIPTION OF TBC-24 BOARD]

TBC-24 board is a Betacam PB TBC (A/D conversion) board that generates a clock following the jitter of the demodulation video signal from DM-89 board, converts the demodulation video signal into digital video data using this clock, and sends it to TBC-23 board.

The outline of a process is first described below.
The video signal that is reproduced from a tape and demodulated contains a jitter component. To eliminate the jitter component, a clock that contains the same jitter component is generated using a write clock generator circuit. When a PB video signal is sampled by this write clock, the A/D-converted digital video data becomes data whose jitter component is canceled.
Since Y and C signals are recorded on the different video tracks of a tape, the way in which each jitter is generated also differs. Therefore, two write clock generator circuits and A/D converter circuits for Y and C signal systems are provided on TBC-24 board. These circuits are almost the same respectively in circuit configuration.

The outline of each circuit is described next. Since Y and C signal systems are almost the same in configuration, only the Y signal system is described.
A write clock generator circuit is first explained below. IC301 plays a leading part in a Y write clock generator circuit. IC301 extracts an H sync signal from the input demodulation Y signal and sends it to the sync guard circuit on TBC-23 board. The sync guard circuit eliminates H sync signal with irregular intervals, separates only H sync signal with regular intervals, and sends it back to IC301 as a SELECT H WINDOW (SHW) signal. IC301 doubly differentiates the demodulation Y signal and gates the detected sync edge signal by this SHW signal. After that, IC301 outputs only the sync edge signal, that is judged to be normal, from pin 50 as a SELECT H (SH) signal.
The output SH signal is converted into a sawtooth wave using a sawtooth wave generator in a phase-shift circuit (IC302, IC307, IC308, and IC409). The sawtooth wave inverts a comparator (IC308) by the phase obtained when the "SCH TRACKING" signal from TBC-23 board and the tape speed information are added to the phase set using RV300, and triggers a monostable multivibrator (IC307) to generate a pulse.
The output signal of normal VCO (IC406) (approximately 14.8 MHz during normal PB) is input to pin 67 of IC301 and frequency-divided into the H frequency using a PLL counter that is reset by the output pulse of the phase-shift circuit described above. A COUNT H signal is generated on the basis of this frequency-divided signal. The COUNT H signal is converted into a signal that has a slope for phase comparison in the inversion portion, and output from pins 16 and 17.
The slope of the COUNT H signal output from pin 16 is sampled and held by the output pulse of the phase-shift circuit described above so as to produce a phase error voltage. The phase error voltage is passed through a cutoff switch (IC400) during guard band period and fed back to the normal VCO (IC406) via a normal error amplifier. A PLL loop is formed via this VCO. As a result, the VCO oscillates with the frequency locked to the input demodulation Y signal and is used for a Y write clock. The slope of the COUNT H signal output from pin 17 is detected its gradient. The result is fed back to pin 14 to maintain the gradient of the slope in the specified value.
IC301 incorporates an impact error detector circuit to cancel an impact jitter occurring when the rotary head touches the tape. The impact error detector circuit takes in the phase error voltage before integration through the A/D converter (IC404), then generates the signal data corresponding to the coming impact jitter by methods of memory, analysis, and forecast, and outputs it. The "IMPACT ERROR" signal obtained when this data is converted from digital into analog is added to a "NORMAL ERROR" voltage to control the normal VCO.
The above description applies to the normal PB mode. For high-speed search mode, a wide-range VCO is incorporated in IC301. The phase error voltage is fed back as a "BID ERROR" voltage via an error amplifier for a wide range. At that time, a "BID ERROR" signal corresponding to the tape speed information is also added to control the wide-range VCO.
The normal VCO and wide-range VCO are selected using an "F BID" signal from TBC-23 board. The selected VCO output signal is sent to the PLL counter in IC301, and simultaneously, it is output to an A/D converter circuit as a Y write clock ("Y WCK") signal. A "Y GATED WCK" signal that eight clock periods (including the reset period of the VCO) are muted is also sent to TBC-23 board.
Moreover, IC301 generates a "WZ" (WRITE ZERO) signal when it receives the output signal of the PLL counter, and sends it to TBC-23 board. IC304 also generates a "W CLP PLS" (WRITE CLAMP pulse) when it receives the SH signal, and sends it to the A/D converter circuit, and to the demodulator circuit on DM-89 board.
In the A/D converter circuit, the input demodulation Y signal is passed through a low-pass filter, clamped in pedestal level using a clamping circuit, and sent to an A/D converter (IC100). The error voltage for clamping is generated when the sample-and-hold voltage using the "Y W CLP" pulse that is generated by a write clock generator circuit and the hold voltage of the "Y PDS CONT" data that is fed back from TBC-23 board are compared with the reference voltage. The demodulation Y signal input to the A/D converter (IC100) is sampled using a write clock that is generated by the write clock generator circuit, and converted into eight-bit digital video data whose jitter is corrected. This data is passed through a digital delay line (IC103) so that it coincides in timing with the "Y DO PLS" pulse from DM-89 board. The data is then sent to TBC-23 board.

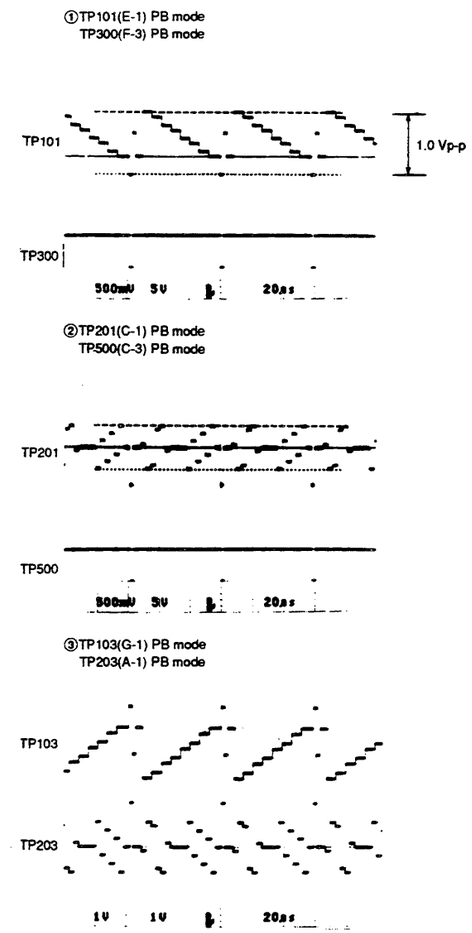

TBC-24 Board -A Side-

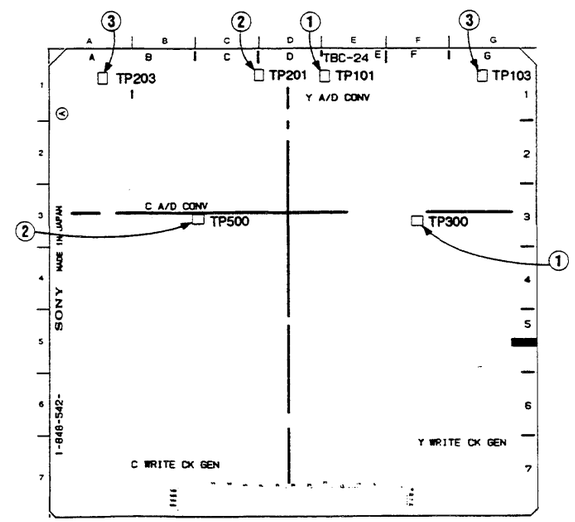

Measurement Condition
MODE : PB mode
TAPE : CR5-1BPS

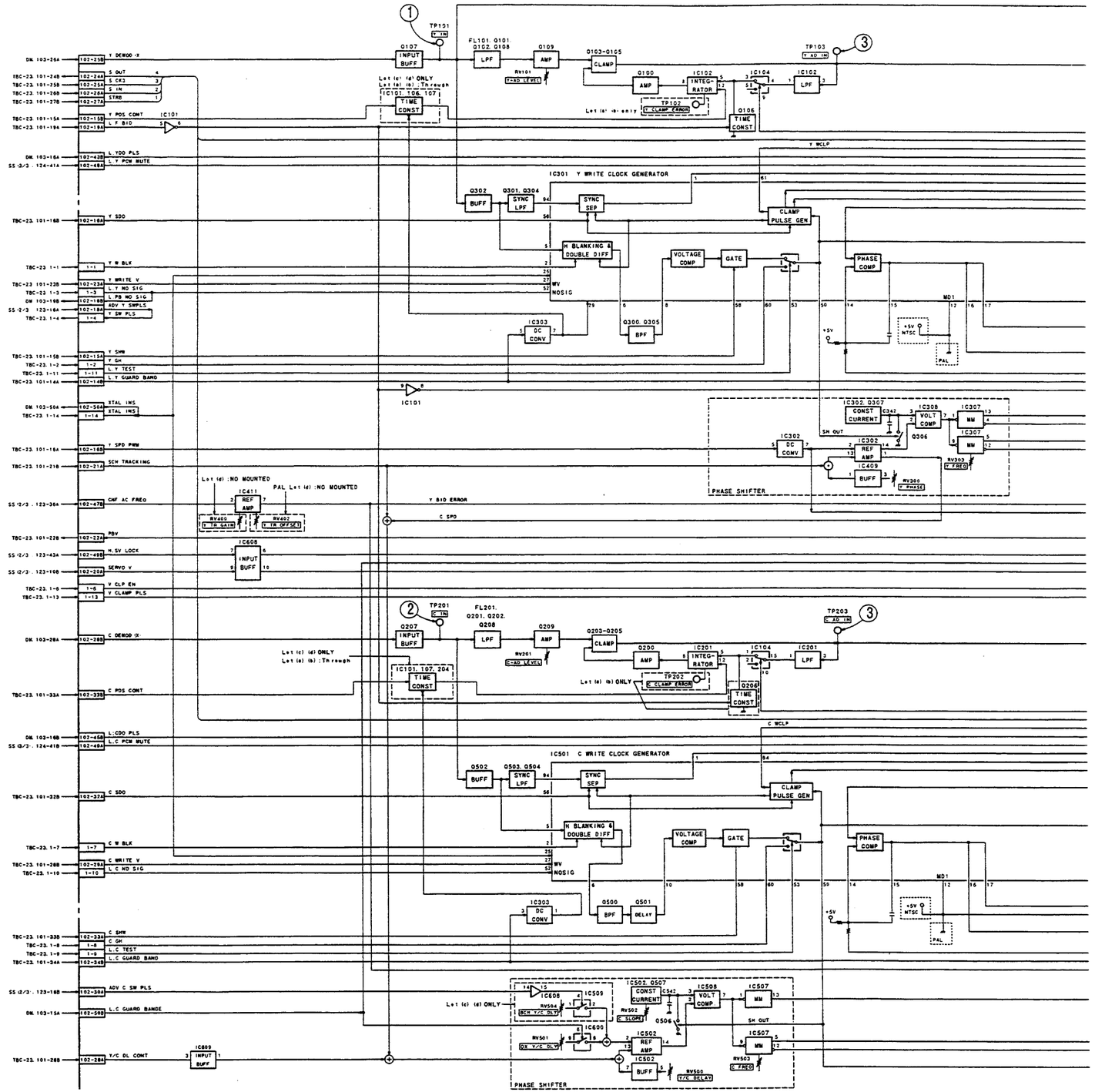
Y DEMOD -X
S OUT
S CK3
S IN
STRB
Y POS CONT
L F BIO
L.YOD PLS
L Y PCM MUTE
Y SDO
Y W BLK
Y WRITE V
L.Y NO SIG
L.PB NO SIG
ADV Y SMPLS
Y SW PLS
Y SHW
Y GH
L.Y TEST
L.Y GUARD BAND
XTAL INS
Y SPD PWM
SCH TRACKING
CHF AC FREQ
PBV
H.SV LOCK
SERVO V
V CLP EN
V CLAMP PLS
C DEMOD (X)
C POS CONT
L.CDO PLS
L.C PCM MUTE
C SDO
C W BLK
C WRITE V
L.C NO SIG
C SHW
C GH
L.C TEST
L.C GUARD BAND
ADV C SW PLS
L.C GUARD BAND
Y/C DL CONT
TP101
Y IN
Q107
INPUT BUFF
FL101, Q101
Q102, Q108
LPF
Q109
AMP
RV101
Y-AD LEVEL
Q103-Q105
CLAMP
Q100
IC102
INTEG-RATOR
IC104
TP102
Y CLAMP ERROR
Q106
TIME CONST
TP103
Y AD IN
Y WCLP
IC301 Y WRITE CLOCK GENERATOR
Q302
BUFF
Q301, Q304
SYNC LPF
SYNC SEP
CLAMP PULSE GEN
H BLANKING & DOUBLE DIFF
VOLTAGE COMP
GATE
PHASE COMP
IC303
DC CONV
Q300, Q305
BPF
+5V NTSC
PAL
IC302, Q307
CONST CURRENT
IC308
VOLT COMP
IC307
MM
Q306
IC302
REF AMP
IC409
BUFF
RV303
Y FREQ
RV300
Y PHASE
PHASE SHIFTER
Y BIO ERROR
C SPD
IC411
REF AMP
RV400
Y IN GAIN
RV402
Y IN OFFSET
IC608
INPUT BUFF
TP201
C IN
FL201, Q201, Q202, Q208
Q207
Q209
Q203-Q205
RV201
C-AD LEVEL
Q200
IC201
TP202
C CLAMP ERROR
Q206
TP203
C AD IN
C WCLP
IC501 C WRITE CLOCK GENERATOR
Q502
Q503, Q504
Q500
BPF
Q501
DELAY
IC609
IC502, Q507
IC509
IC600
IC502
RV502
C SLOPE
Q506
RV501
RV503
C FREQ
RV500
Y/C DELAY

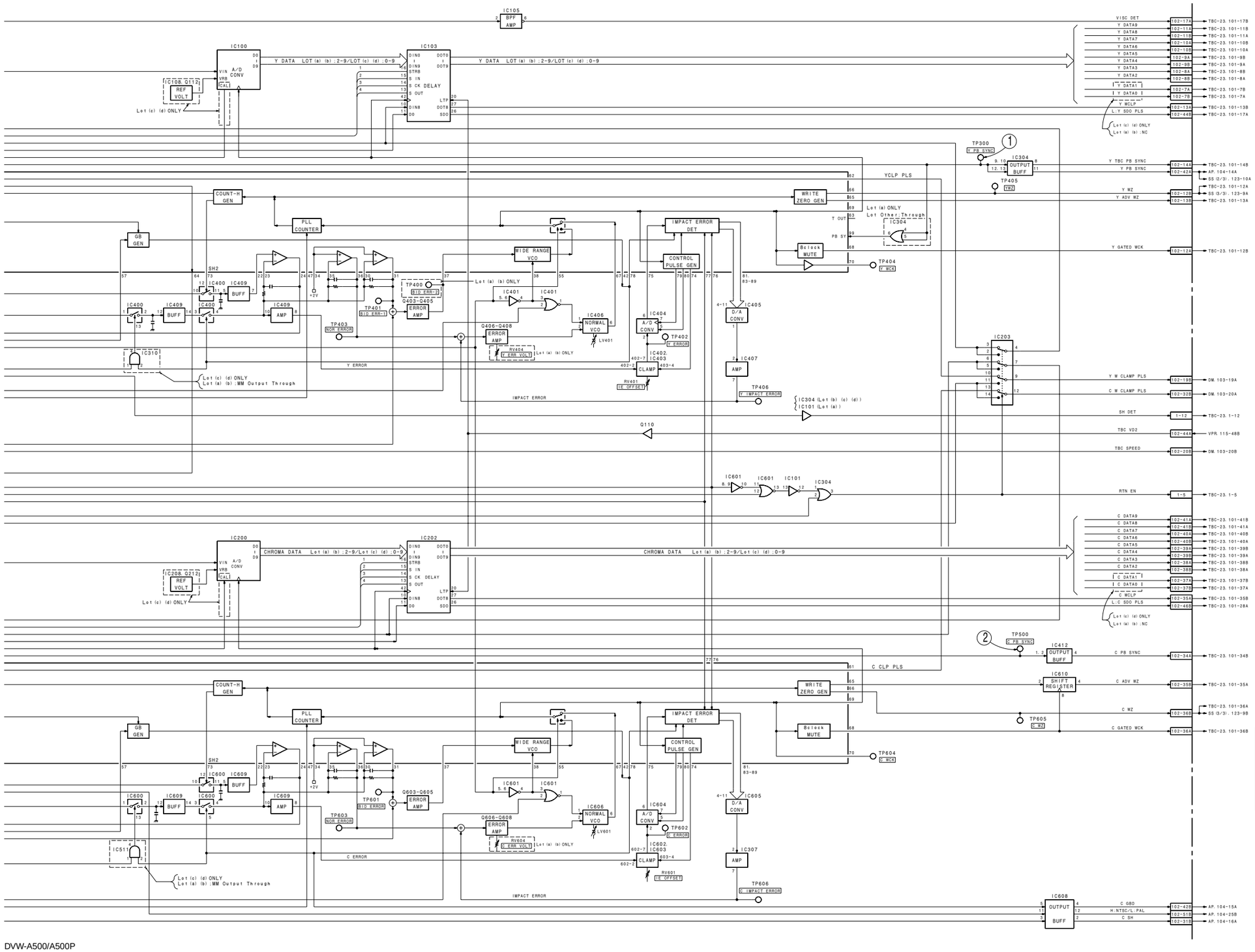

This block diagram corresponds to the production lots of Lot No.302 and higher.
Circuit sections that any midway change occured are shown using the abbreviation mentioned below.

abbrev	Lot No.	Board No.
Lot (a)	302-304	1-648-542-11
Lot (b)	305-402	1-648-542-12
Lot (c)	403-502	1-648-542-13
Lot (d)	503-	1-648-542-14, 15, 16, 17

Betacam PB TBC (A/D Conversion)

TBC-24

DVW-A500/A500P
DVW-A510/A510P
DVW-CA510/CA510P

[CIRCUIT DESCRIPTION OF TBC-23 BOARD]

TBC-23 board is a Betacam PB TBC (sequence/reference) board that corrects the time base, dropout, and picture quality and controls the phase by a VISC, with respect to the digital video data from TBC-24 board, and generates various timing signals used in a TBC block.

A sequence processing circuit is first described below.
Since Y and C signal systems are similar in configuration, only the Y signal system is primarily described except the complementary explanation of the block peculiar to the C signal system.
The eight-bit Y data from TBC-24 board is sent to a video data processing circuit in IC104, and the guard band period is replaced by a gray code (01H) and the dropout detection block is replaced by a DO code (00H) as the preparation of dropout compensation. After that, the data is written in field memory (IC107) under the control of a memory control circuit in IC104. Pedestal data is detected in the initial stage of the video data processing circuit, and "PDS CONT" data is fed back to TBC-24 board so that a level of 10H (80H for a chroma signal) is obtained. IC104 also has a sync guard circuit and separates only H sync signal with regular intervals from the H sync signal from the write clock generator circuit on TBC-24 board and sends it back as an SHW (SELECT H WINDOW) signal.
The Y data written in the field memory (IC107) is read by the read clock locked to the reference signal under the control of the memory control circuit in IC104. As a result, the Y data whose time base is corrected is obtained.
The reference V timing signal uses an "SQ V" signal in the normal and DT PB modes and uses an "SV V" signal in the high-speed PB mode.
An analog Betacam chroma signal is recorded on the tape by a system called CTDM (Compressed Time Division Multiplex) in which the R-Y and B-Y signals whose time base is compressed are arranged within an H period. Therefore, when a chroma signal is read from the field memory (IC109), R-Y and B-Y data are alternately read to convert into a signal in which the time-base corrected R-Y and B-Y data are alternately arranged for every clock.
The Y data whose time base has been corrected is input to the three-line dropout compensator (IC110) in the next stage to compensate for a dropout and sent to the next stage as 10-bit data. In the three-line dropout compensator, signals before and after 1H are prepared via delay lines. If a dropout occurs, the signal is replaced by the average data of the signals before and after 1H . If a dropout occurs in the signal after 1H, too, the signal is replaced by the data before 1H.
In the edge noise reducer (ENR) in the next stage, the Y data whose dropout has been compensated is corrected in picture quality by a digital correlation circuit. Chroma data is also corrected in picture quality by a line crawl canceler (LCC)(IC113). The Y data and chroma data are then input to IC206, output as 10-bit digital video data that is multiplexed in the order of "CB, Y, CR, Y, CB, Y, CR, Y, ...", and sent to VPR-1 board as "B-CAM DATA 0 to 9".
In case that a setup is added to the signal in NTSC system, the data is removed the setup and corrected the level by IC228 (NTSC only) in the later stage of IC206, then output.

A reference system is described next. A circuit that generates various timing signals used in the TBC block and a circuit that controls the TBC process are provided in the reference system.
The timing signals used in the TBC block are generated by IC206. IC206 has a "Read Timing Pulse Generator" function as well as a "Y/C Complex" function that multiplexes the Y and C data described above. IC206 generates various timing signals on the basis of the timing reference signals ("REF CK 27", "REF 4FSC", "B-CAM CF", "TBC VD", and "TBC HD") from the timing reference signal generator circuit on VPR-1 board, and sends them to ICs of each sequence process block.
The TBC process is controlled by the MPU (IC202) on TBC-23 board under the command ("SYIF2 CMD") of the serial communication from the main CPU on SS-52 board. The MPU sends the mode information and operation command to each main IC of the TBC process, outputs eight-bit Y/C delay control data, test commands, and other control signals, and saves the adjustment data of the circuit on TBC-23 board in an EEP-ROM (IC200).
The eight-bit Y/C delay control data output from the MPU is converted into an analog "Y/C DL CONT" signal using a D/A converter (IOC203) and sent to TBC-24 board. The data is then added to the phase-shift circuit in a C write clock generator circuit to shift the phase of a chroma signal and synchronize the Y and chroma signals.
The IC (IC205) called a memory sequencer receives the command from IC206, and controls a V timing signal and the phase detection of a VISC signal.
The V timing signal is controlled as described below. IC205 takes in the "PB V", "DT V", SV V" signals, other timing signals and control information from SS-52 board, VPR-1 board, and a TBC block, generates an "SQ V" signal from the correlation of these signals, and outputs it. This "SQ V" signal is used as the reference of time base correction in the normal PB and DT PB modes.
The phase detection of the VISC signal is controlled as described below. The "VISC Y" signal that is extracted from Betacam PB data on VPR-1 board, converted from digital to analog, and fed back is sent to the VISC phase detector circuit on TBC-23 board, where the phase of a separated VISC signal is compared with the phase of a fine-adjusted REF SC signal (IC216). IC205 outputs a "VISC DET" pulse in proper timing on the basis of various signals and information. The "VISC DET" pulse turns on and off the switch in the phase comparator IC216 to sample and hold the phase compare output signal. The resultant phase error voltage is sent to TBC-24 board as an "SCH TRACKING" signal. The signal is then added to the phase-shift circuit in Y and C write clock generator circuits so as to shift the phase of the Y and C signals and to make the phase of a subcarrier (VISC) during REC coincide with that of an output subcarrier.

DVW-A500P	S/N ; 10001 through 11695 (EK)
DVW-A500P	S/N ; 10001 through 10030 (UC)
DVW-A500	S/N ; 10001 through 10370 (J)
DVW-A500	S/N ; 10001 through 11280 (UC)
DVW-A510P	S/N ; 10001 through 10520 (EK)
DVW-A510	S/N ; 10001 through 10250 (J)
DVW-A510	S/N ; 10001 through 10250 (UC)
DVW-CA510P	S/N ; 10001 through 10020 (EK)
DVW-CA510	S/N ; 10001 through 10004 (UC)

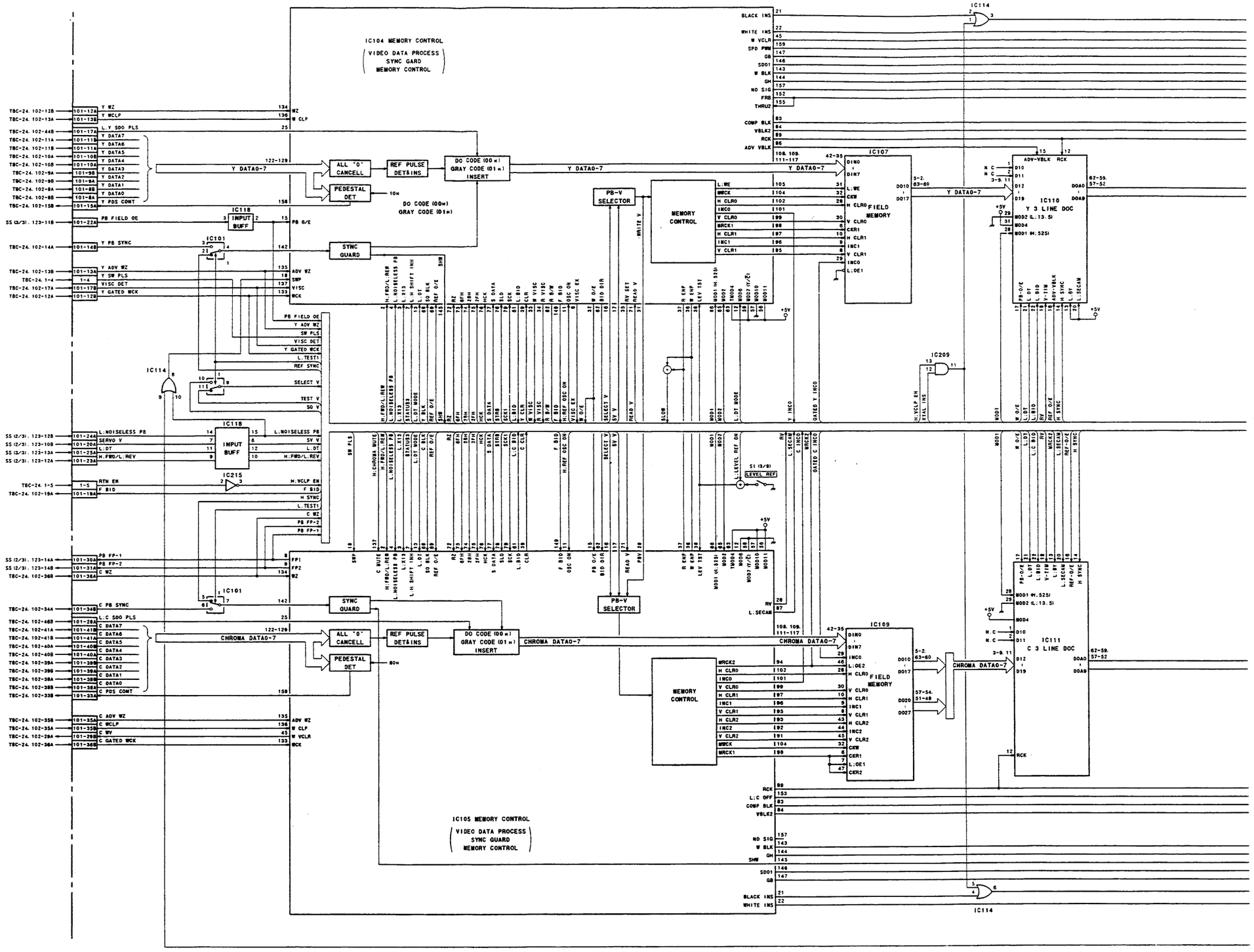

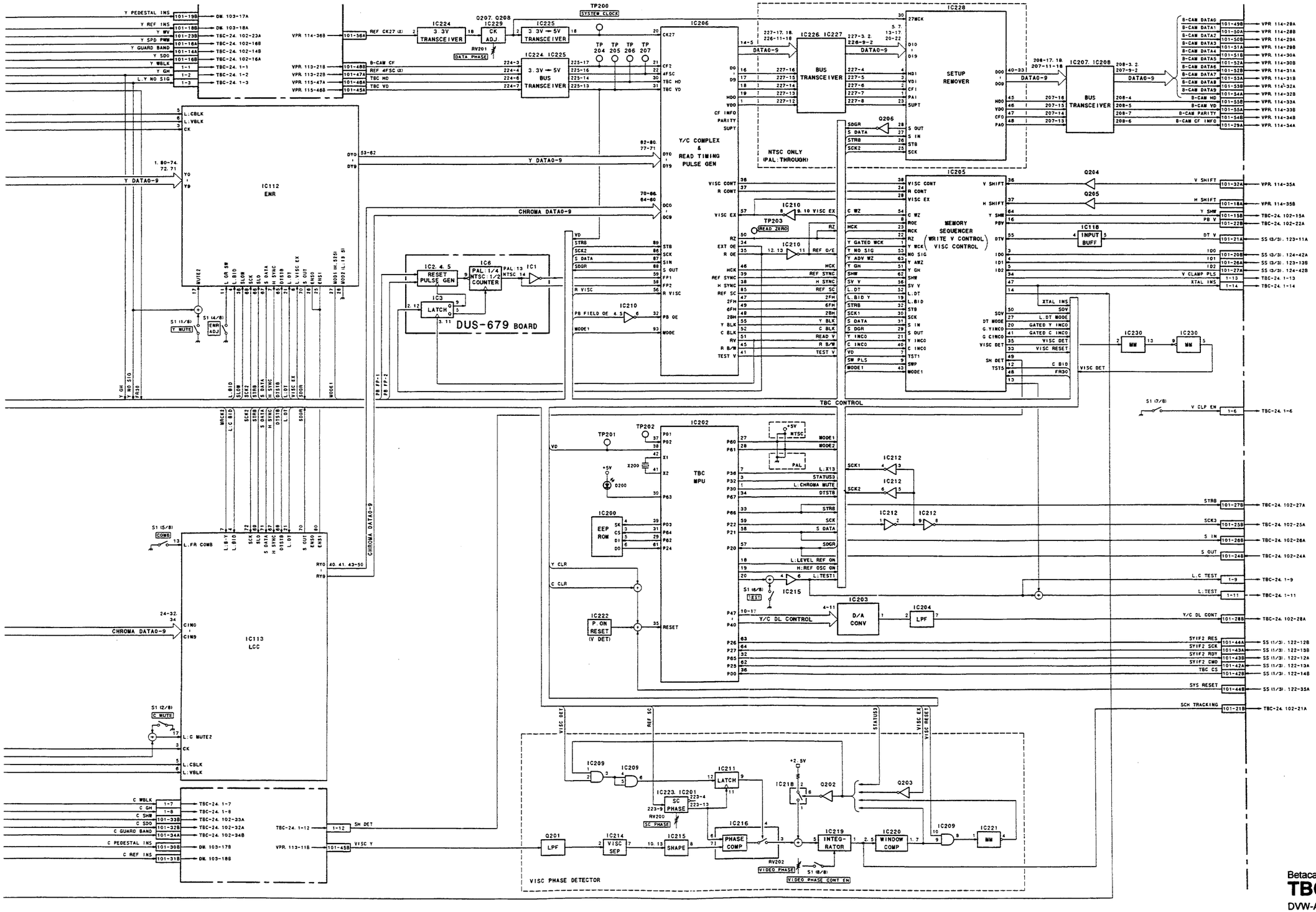

Betacam PB TBC (Sequence/Reference)

TBC-23

DVW-A500/A500P
DVW-A510/A510P
DVW-CA510/CA510P

Lot No ; 401 and higher

DVW-A500P	S/N ; 11696 and higher (EK)
DVW-A500P	S/N ; 10031 and higher (UC)
DVW-A500	S/N ; 10371 and higher (J)
DVW-A500	S/N ; 11281 and higher (UC)
DVW-A510P	S/N ; 10520 and higher (EK)
DVW-A510	S/N ; 10071 and higher (J)
DVW-A510	S/N ; 10251 and higher (UC)
DVW-CA510P	S/N ; 10021 and higher (EK)
DVW-CA510	S/N ; 10001 and higher (J)
DVW-CA510	S/N ; 10005 and higher (UC)

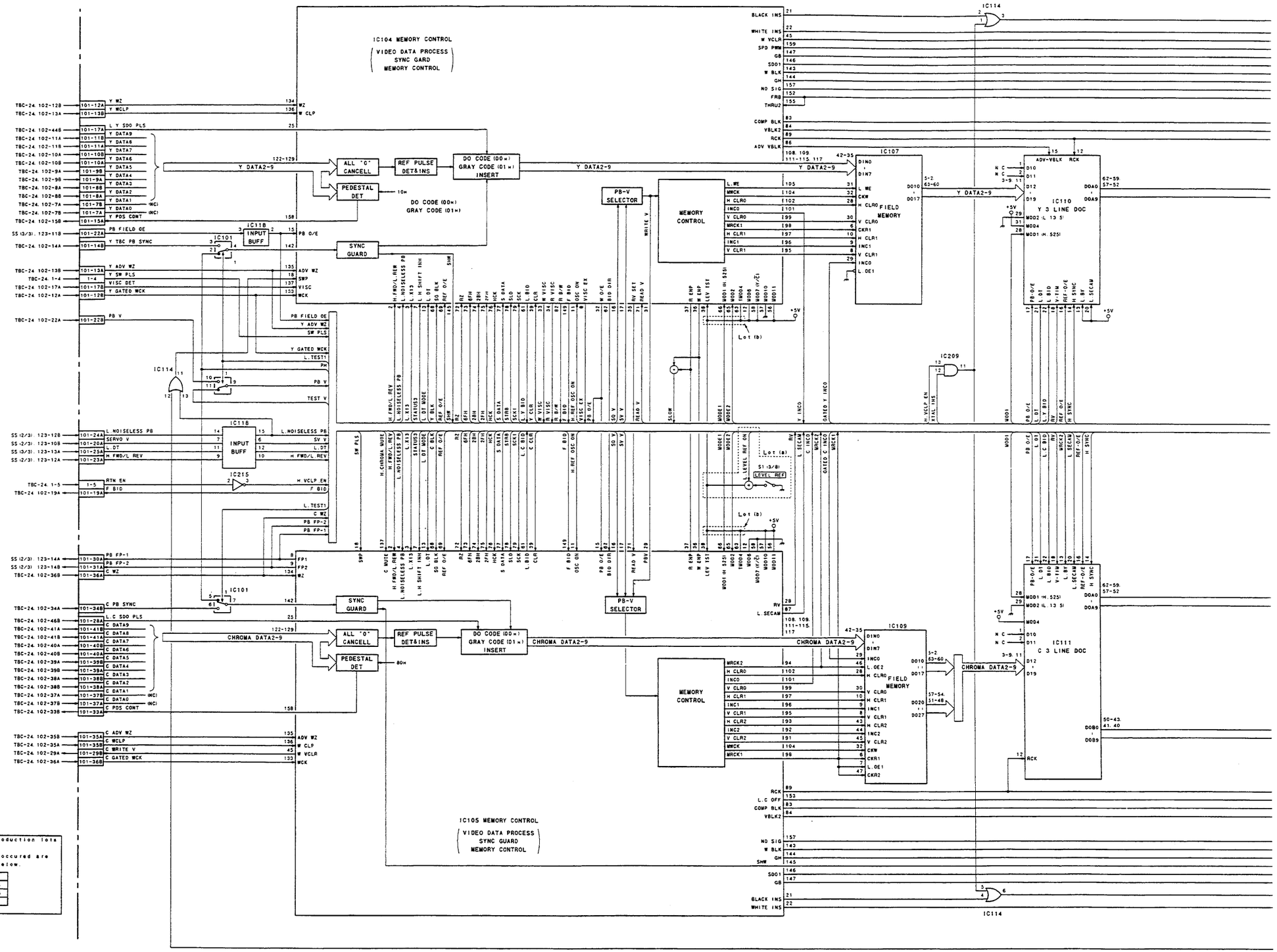

This block diagram corresponds to the production lots of Lot No.401 and higher.
Circuit sections that any midway change occured are shown using the abbreviation mentioned below.

abbrev.	Lot No.	Board No.
Lot (a)	401-604	1-648-543-14
Lot (b)	605-	1-648-543-15

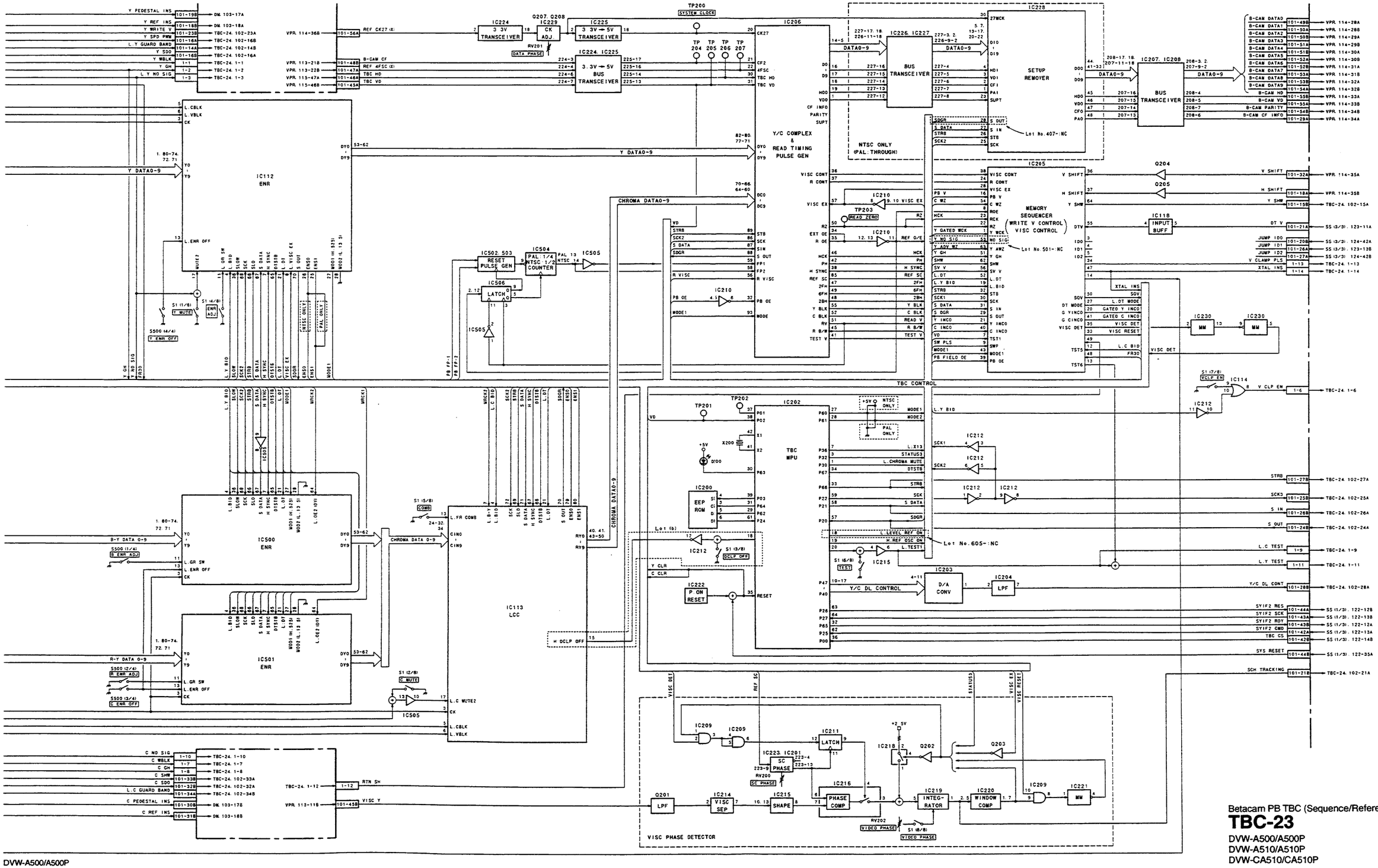

Betacam PB TBC (Sequence/Reference)

TBC-23

DVW-A500/A500P
DVW-A510/A510P
DVW-CA510/CA510P

[CIRCUIT DESCRIPTION OF AP-28 BOARD]

AP-28 board is a Betacam PB AFM demodulator board that demodulates the AFM signal reproduced from an analog Betacam tape into an audio signal. This board also mounts a DOLBY decoding circuit for the audio signal (LAU signal) reproduced from the longitudinal tracks of the analog Betacam tape.

The outline of an AFM system is first described below.
In the Betacam SP format, the audio signals in channels 1 and 2 of four-channel audio input signals are recorded on the longitudinal tracks of the tape by an AC bias system, and the audio signals in channels 3 and 4 are recorded on chroma video tracks (track C) by an AFM system. The AFM system frequency-multiplexes FM-modulated audio signals into the FM-modulated chroma signal, then records it. The carrier frequencys of FM audio signals use frequencys lower than the carrier frequency of a chroma signal as described below.

Carrier frequency CH3 : 310 kHz, CH4 : 540 kHz
Maximum frequency deviation 75 kHz

To pay attention on AFM reproduction is that rotary heads C-A and C-B are switched in the course of continued signal because an audio signal contains no blanking period that a video signal contains. Since the switching noise of an RF signal appears as a high noise during FM demodulation, proper measures against the noise are required.
When the analog Betacam tape is reproduced by a digital Betacam VTR, the AFM signal is also reproduced in the form that its time base is compressed about 9% because of the difference of the drum diameter. Therefore, a circuit for time-base correction is added on AP-28 board.

The outline of an AFM signal processing circuit is described next.
The C RF signal that branches in the PB C input circuit on DM-89 board is sent to AP-28 board. This signal is sent to a 800-kHz low-pass filter to eliminate chroma signal components and to produce an AFM RF signal, then adjusted in level using an RF amplifier in the next stage.
The resultant signal is converted into eight-bit data using an A/D converter (IC308) and written in field memory (IC313) via a selector (IC311). The data is written four bits at a time using the selector. The reason is that the field memory consists of four bits per word. Among the data written in the field memory, the CH-A data reproduced by the C-A head is read from pins 5 to 8 four bits at a time and sent to IC312. The CH-B data reproduced by the C-B head is read from pins 35 to 32 four bits at a time and sent to IC312.
Each data mentioned above is restored to eight-bit data using the switch in IC312.
The above process is controlled by IC312. IC312 called a "digital AFM expander" functions as an "AFM TBC" circuit.
IC312 controls a PLL circuit and generates a write clock locked to the C SH (C SELECT H) signal generated on TBC-24 board. Using this write clock, the A/D converter (IC308) samples the AFM RF signal and converts it into jitter-canceled data. IC312 also corrects the time base by reading data from the field memory (IC313) using a read clock that is generated from reference signal "REF CK 27".
For the RF signal recorded on the tape, CH-A and CH-B data are not completely switched every time the drum rotates by a half turn, but overlap areas of some hundreds of micro-second are added before and after each channel. When the analog Betacam tape is reproduced by a digital Betacam VTR, data can be transmitted in one line until it is written in the field memory because the CH-A and CH-B data whose time base is compressed are alternately reproduced at slight intervals. However, when data is read from the field memory, the respective line is required because the time base is corrected.
IC312 alternately links the read CH-A and CH-B data whose time base is corrected and generates time-base corrected AFM RF data. At that time, IC312 uses two select switches for data fetching, and generates the AFM RF data with longer CH-A data and the AFM RF data with longer CH-B data and outputs them by setting high- and low-selection duty cycles and controlling them. These AFM RF data are passed through a D/A converter and 800-kHz low-pass filter, respectively.
As a result, the AFM RF signal with longer CH-A signal ("AFM 1" signal) and the AFM RF signal with longer CH-B signal ("AFM 2" signal) are produced.
The "AFM 1" and "AFM 2" signals are passed through AGC amplifier and branch into two paths, respectively. These signals are then passed through 310-kHz or 540-kHz bandpass filter and demodulator, respectively. As the result, four signals (CH3 audio signal with longer CH-A signal, CH3 audio signal with longer CH-B signal, CH4 audio signal with longer CH-A signal, and CH4 audio signal with longer CH-B signal) are produced.
Using two pairs of select switches (IC503 for CH3 and IC603 for CH4) for signal fetching, therefore, the CH-A and CH-B signal portions (not including a high demodulation noise occurring at the joint of RF signals) are alternately fetched and linked under the control from IC312.
After that, both signals are amplified and passed through 25-kHz low-pass filter, respectively, then sent to a noise reduction circuit (IC701) to produce noise-free AFM demodulation audio signals ("B PB CH3" and "B PB CH4"). The produced signals are sent to APR-1 board.
When a dropout occurs in the AFM RF signal, it is detected in the AGC amplifier (IC403) for the "AFM 2" signal. The dropout portion is temporarily held in each demodulator according to the dropout information, and the relevant portion of a demodulated audio signal is interpolated linearly.

Lastly, an LAU signal processing circuit is described below.
The audio signals reproduced from the longitudinal tracks of the analog Betacam tape are equalized in a frequency characteristic on CUE-1 board and sent to AP-28 board.
On AP-28 board, the input audio signals are compensated in the undulation of a low-frequency response using contour effect compensator, respectively. After that, the phases in both channels are adjusted using a phase adjustment circuit. The resultant audio signals are sent through 15-kHz low-pass filters to a DOLBY C noise reduction IC (IC105), where the audio signals are DOLBY-decoded and output, then sent to APR-1 board as "B PB CH1" and "B PB CH2" signals.

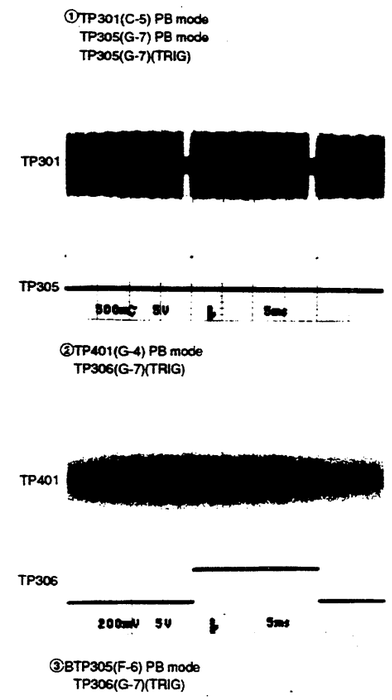

AP-28 Board -A Side-

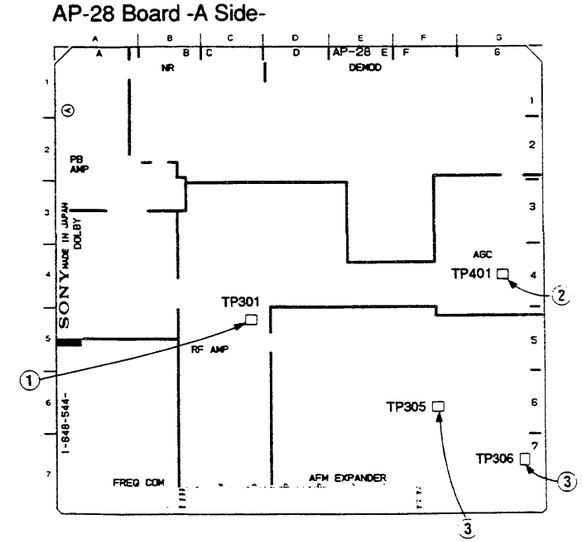

Measurement Condition
MODE : PB mode
TAPE : CR5-1BPS

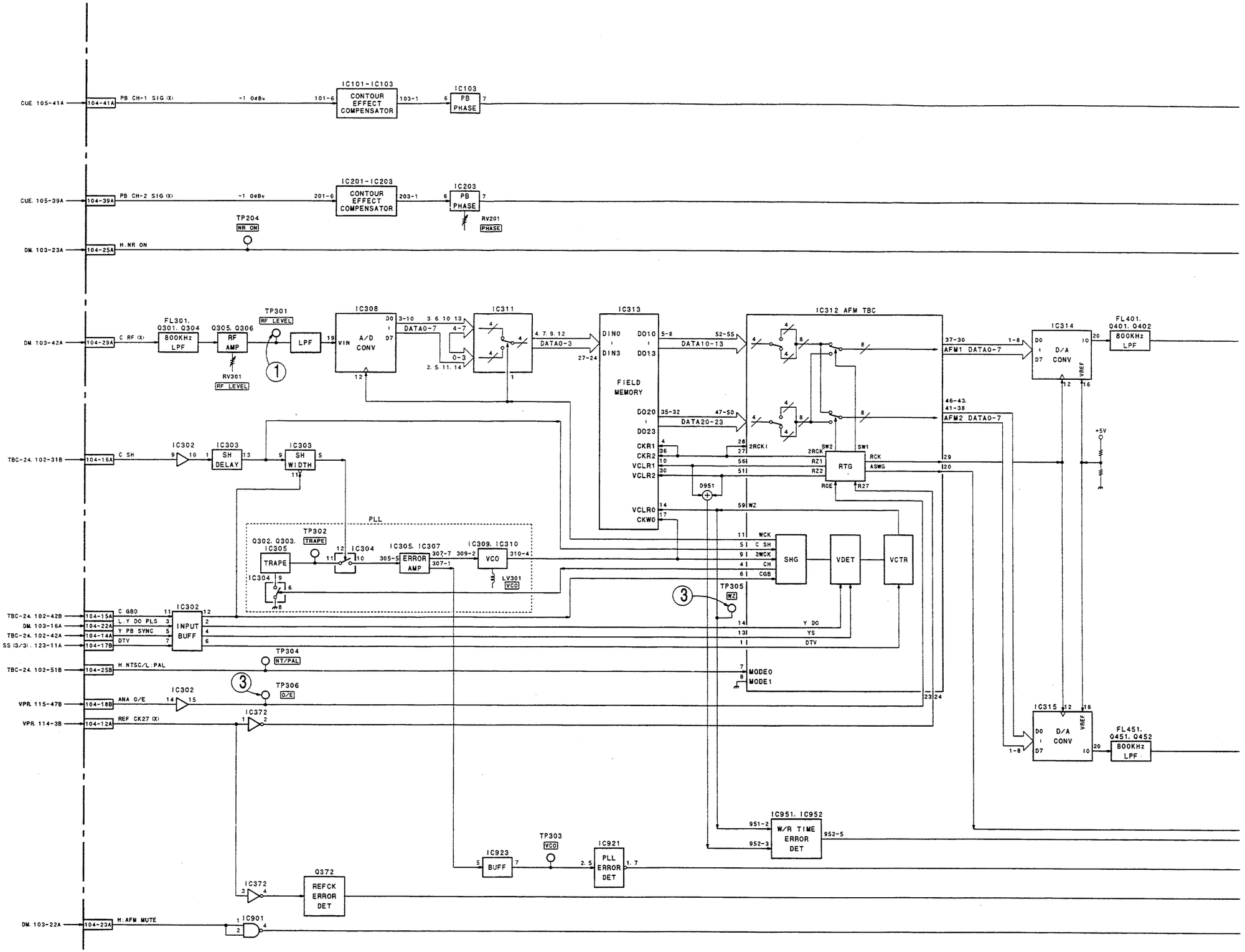

DVW-A500/A500P
DVW-A510/A510P
DVW-CA510/CA510P

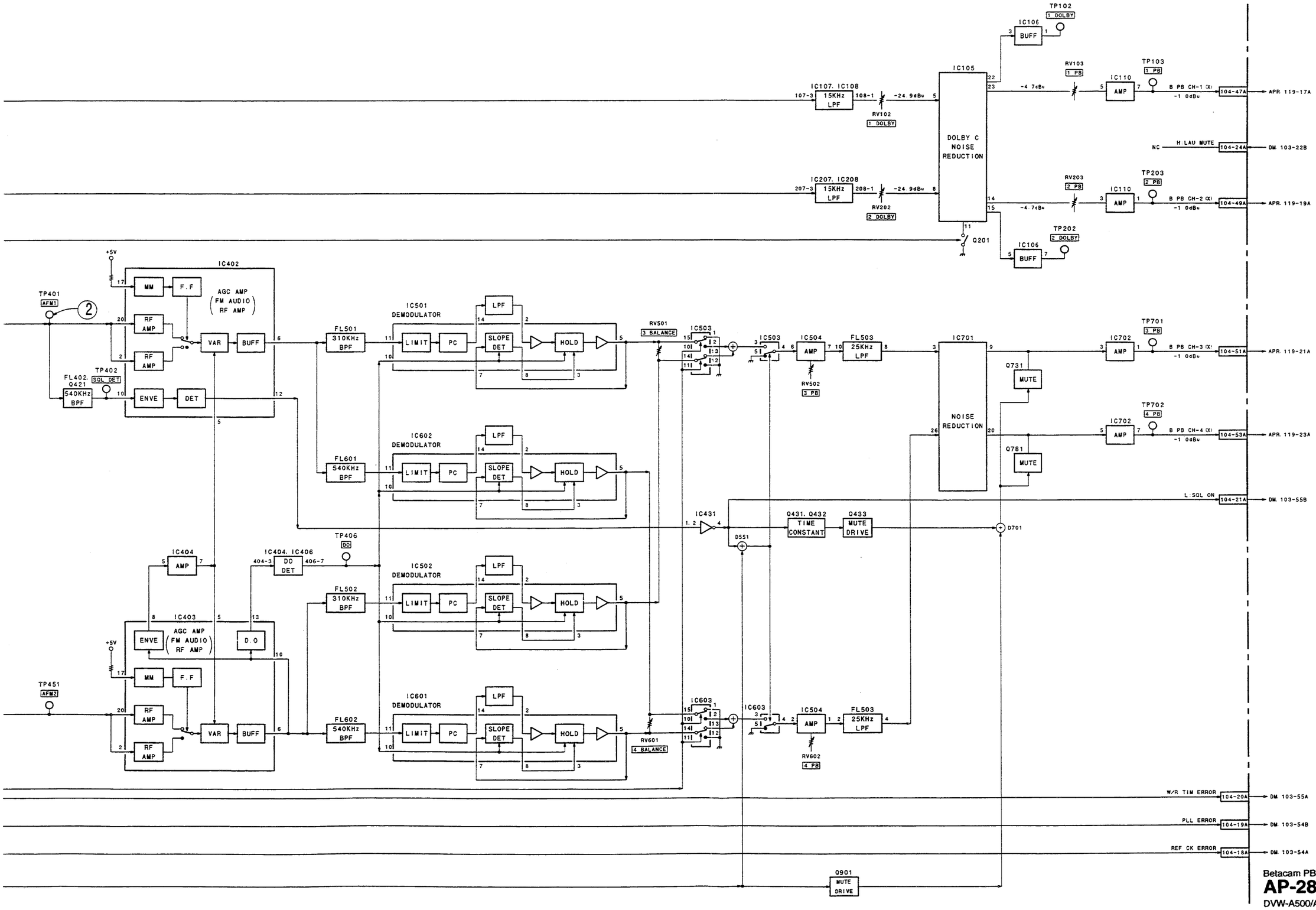

Betacam PB AFM Demodulator

AP-28

DVW-A500/A500P
DVW-A510/A510P
DVW-CA510/CA510P

 SS-52 (1/3)

[CIRCUIT DESCRIPTION OF SS-52 BOARD (1/3)]

SS-52 board (1/3) is a system control system block that controls man-machine interface, processor control, and overall system.

SS-52 board consists of the following blocks.
SS-52 (1/3): System control system block
SS-52 (2/3): Servo control system block
SS-52 (3/3): DT control system block
These blocks incorporate CPUs (MPU), respectively, and control their own system while they communicate mutually via dual port RAMs. Especially, the system control system controls the overall system as well as its own system.
The system control system is described below.
The outline of the system control system is first described.
The CPU system which constitutes the center of the system control system consists of main and sub CPU systems. The main CPU (IC5) controls the basic functions for peripheral boards and the overall system. The sub CPU (IC50) controls the key panel including the time counter display.
The flow of the controls performed by each CPU are summarized as described below.

Main CPU
•CPU system configuration : Main CPU (V25)(IC5)
Address decoder (IC7(2/2))
ROM (256k bytes)(IC12)
RAM (32k bytes)(IC10)
NOVRAM (8k bytes)(IC13)
Interrupt controller (IC16)

- Communicates with the sub CPU via dual port RAM (IC37 and IC38).
- Communicates with the servo CPU via dual port RAM (IC34 and IC35).
- Controls DPR-36 board while exchanging the system data and control signals ("PAD 0 to 7/CONT") via parallel bus interface (IC28, IC29, and IC30).
- Controls EQ-45 board via RF block interface (IC7(1/2) and IC8).
- Controls APR-1, FP-58, SWC-19, and RM-130 boards via MPU communication controller (IC25 and IC22).
- Controls VPR-1, DM-89, and TBC-23 boards via MPU communication controller (IC27 and IC26).
- Controls the superimpose IC (IC46) via the circuit mentioned above to send character signals to VPR-1 and DIF-16 boards.
- Controls the LTC processor IC (IC42) to generate and read the LTC signal.
- Communicates with the outside via a serial interface (IC15) by the RS-232C protocol (using the RS-232C connector).

Sub CPU
- CPU system configuration : Sub CPU (Z80)(IC50)
Address decoder (IC53(1/2))
ROM (64/256k bytes)(IC54)
RAM (8k bytes)(IC52)
- Communicates with the main CPU via dual port RAM (IC37 and IC38).
- Controls the key panel (overall lower control panel including the time counter display and search dial assembly) by the serial communication with the MPU on KY-231 board.
- Communicates with the outside via a remote interface (IC53(2/2)) by the RS-422 protocol (using the 9-pin remote connector).
- Sends a watchdog reset pulse to the main CPU when an error is detected during communication with the main CPU.

A few complementary explanation is given for the contents of the above description.

(1) NOVRAM
The NOVRAM (IC13) is used as an error logger that saves the data at that time when each error occurs. This RAM has no backup function.

(2) RF block interface
The RF block interface (IC7(1/2) and IC8) reads the D/A converter control data set in the RAM, converts the data into the serial data ("SYIF1 CMD") in which four-bit D/A channel numbers are added, and sends it to EQ-45 board together with a clock signal and strobe signals, to set the various control data to the three 12-channel D/A converter on EQ-45 board.
The RF block interface also counts the metric pulses from the VITERBI ICs on EQ-45 board, using the head select signals as the gate windows, and sends the count data to the CPU. The CPU controls the gain and phase of each equalizer circuit so that the metric pulses decrease.

(3) MPU communication controller
The MPU communication controllers (IC25 and IC22, and IC27 and IC26) can communicate with eight MPUs (maximum) by serial communication, respectively. IC25 sends a "SYIF3 CMD" command to each board together with a clock signal and chip select signals, and IC27 sends a "SYIF2 CMD" command to each board together with a clock signal and chip select signals. These commands control the basic function of the MPUs on each board.
The MPU communication controller also have 16 parallel ports (eight input ports and eight output ports). These ports are used for the input operations by switches, and the signal exchange between DPR-36 or EQ-45 board and the CPU.

For each CPU, LEDs that display each operation state are mounted on the board.
D301 displays the operation state of the main CPU, and D601 displays the operation state of the sub CPU. Each LED blinks at intervals of approximately 1 Hz if the operation state is normal.

3-51

 SS-52 (1/3)

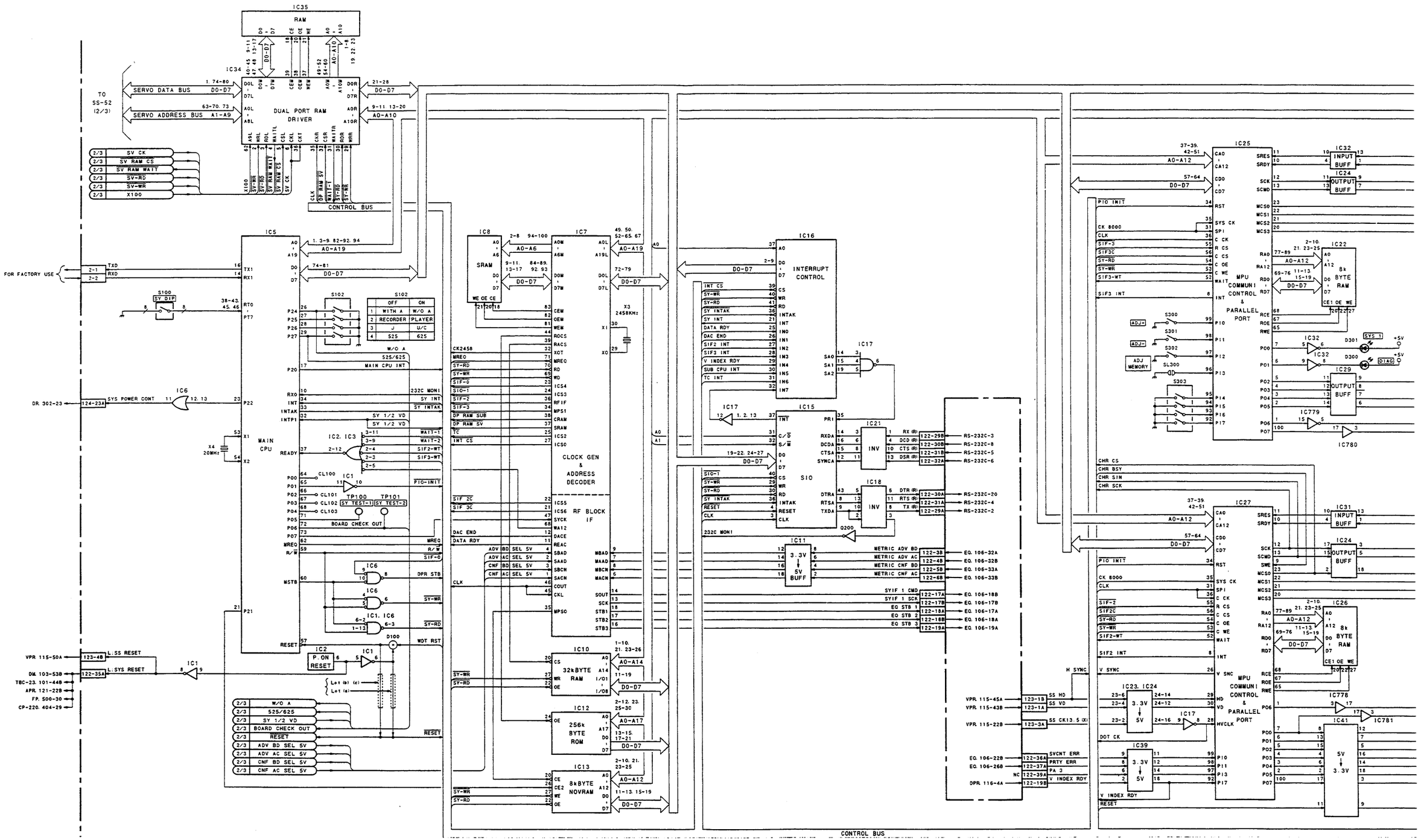

 3-52

DVW-A500/500
DVW-A500P/500P

 SS-52 (1/3)

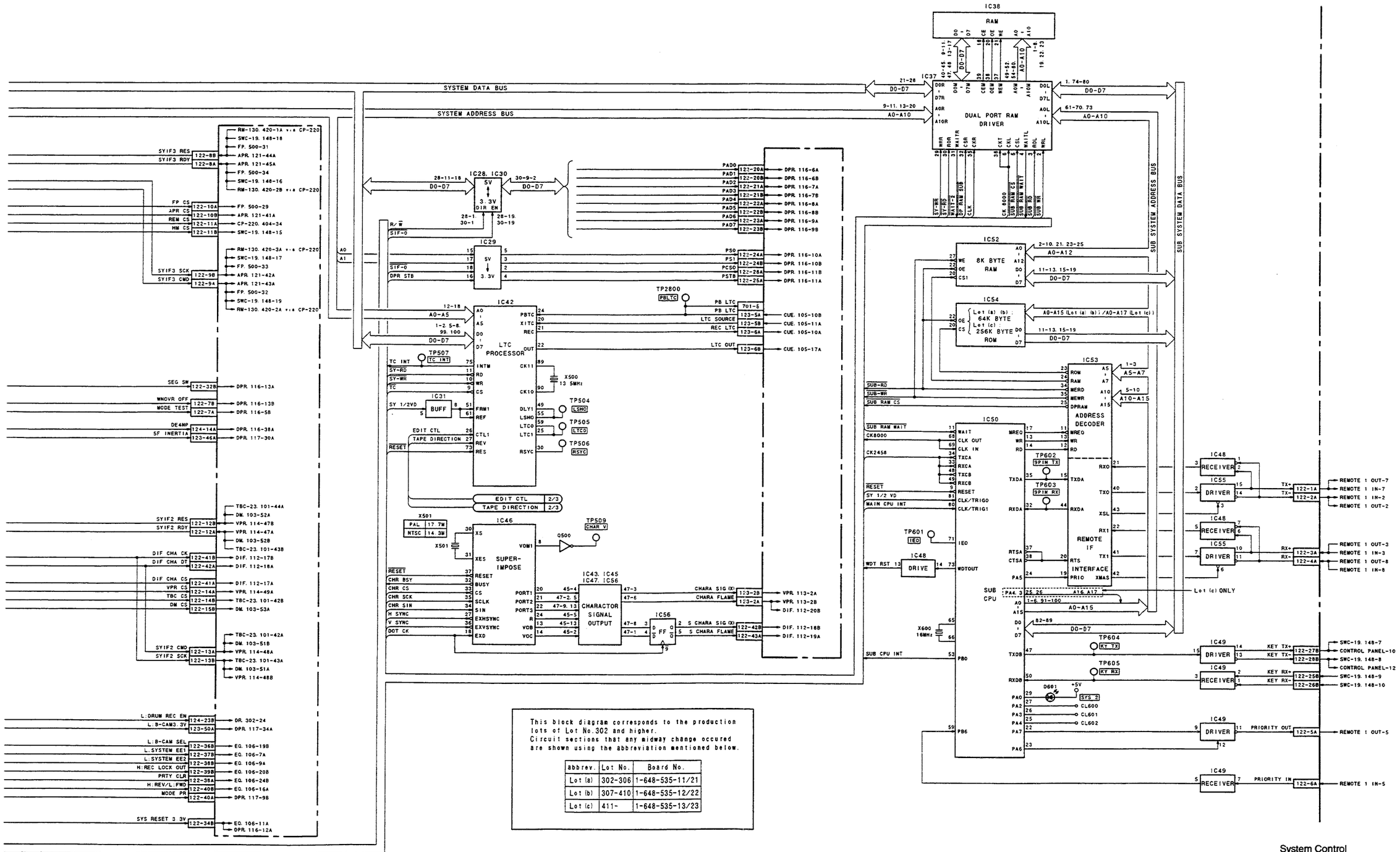

This block diagram corresponds to the production lots of Lot No.302 and higher.
Circuit sections that any midway change occured are shown using the abbreviation mentioned below.

abbrev.	Lot No.	Board No.
Lot (a)	302-306	1-648-535-11/21
Lot (b)	307-410	1-648-535-12/22
Lot (c)	411-	1-648-535-13/23

System Control
SS-52 (1/3)
DVW-A500/500
DVW-A500P/500P

 3-53

 SS-52 (2/3)

[CIRCUIT DESCRIPTION OF SS-52 BOARD (2/3)]

SS-52 board (2/3) is a servo control system block that gathers the feedback information from sensors and mechanical devices, performs detection processing for the information, and controls the mechanical devices via DR-307/200 board according to the result of the detection.SS-52 board (2/3) also mounts an SAT control circuit that slightly differs from the general servo control.

The configuration of the servo control system block is summarized below.
The servo CPU system (IC750, etc.) constitutes the center of the servo control system, and controls the overall servo system. The servo CPU connects with the servo IC (IC774) and two I/O ports (IC762 and IC782) by data bus, and connects with the drum MPU (IC700), MPU on DR-307/200 board, and SAT IC (IC1003) by serial communication.

The outline of each portion is described below.

(1) Servo CPU system
CPU system configuration : Servo CPU (16-bit)(IC750)
Address decoder (IC756, IC757, etc.)
ROM (4M-16 bits)(IC761)
RAMs (2k bytes x 2)(IC751 and IC758)
The servo CPU constitutes the center of the servo control system. It controls the servo system except a DT function. This servo CPU communicates with the CPU of the system control system via the dual port RAM (IC34 and IC35) (on SS-52 board(1/3)) and communicates with the CPU of the DT control system via dual port RAM (IC2113 and IC2115) (on SS-52 board(3/3)).
The servo CPU has serial ports, so communicates with the drum MPU (IC700) and the MPU on DR-307/200 board in serial, and controls these MPUs.
It also controls the SAT IC (IC1003) via the I/O port (IC782) connected using a data bus by serial communication.
The servo CPU has analog input terminals, so takes in motor currents, tape tensions, and other analog data, and converts them into digital data. Moreover, it takes in digital data and detection data via the MPU on DR-307/200 board and the servo IC (IC774), and controls the servo according to these data items.

(2) Servo IC
The servo IC (IC774) receives the CTL signal and various FG pulse signals that are fed back from DR-307/200 board, calculates the timing, and outputs PWM signals for each motor control to DR-307/200 board.
However, the PWM signal output from pin 31 provides a speed offset for the PLL circuit in the VITERBI processing system on EQ-45 board. The pulse width of this PWM signal varies depending on the tape speed. This signal is DC-converted using IC765, then time-shared into four PB RF identifying DC signals using analog switches (IC771 and IC775), and sent to EQ-45 board.
In addition to the above description, the servo IC also detects the rotating direction of the capstan motor, generates a 1/2 VD pulse, and outputs them.

(3) Drum MPU
The drum MPU (IC700) sends a PWM signal for drum motor control to DR-307/200 board under the control of the servo CPU, and outputs the select signals for each rotary head to EQ-45 and DPR-36 boards and the ENABLE signal for the flying erase head to EQ-45 board.

(4) SAT control circuit
SAT is the abbreviation for "Supplemental Automatic Tracking". The SAT control system is a new automatic tracking system that uses the "TRACKING PILOT" signals shown in Fig. 2-2-2 in Section 2. This system supplements the conventional tracking servo function that uses only the CTL signal, ensuring an accurate tracking during editing. For the "TRACKING PILOT" signals, a signal of 400 kHz is recorded before the audio sectors, and a signal of 4 MHz is recorded after the audio sectors. The "TRACKING PILOT" signals are not erased during insert editing. At present, only the SAT signal that is reproduced from track A by the REC head is used as the reference signal for the tracking servo.
The SAT RF signal reproduced by the REC A head is sent from EQ-45 board. This signal is passed through an RF amplifier (IC1102), then separated into 400 kHz and 4 MHz components using a bandpass filter.
The 400 kHz component is sent to the SAT IC (IC1003), shaped, and sent to the servo IC (IC774) as a timing pulse so as to detect the time difference between the component and the drum PG pulse. The result data is fed back to the tracking servo.
The 4 MHz component is envelope-detected using IC1107, sampled and held using a timing pulse from the drum MPU (IC700), and sent to the servo CPU (IC750) as envelope data.
This data is then fed back to the tracking servo so that it is maximized.
In the REC mode, the SAT IC (IC1003) generates SAT REC signals under the control of the servo CPU, sends it to EQ-45 board together with an ENABLE signal, and sends a START pulse, that reports the track's write start, to DPR-36 board.
In the PB mode, the SAT IC shapes the SAT PB signal into a timing pulse as described above and sends it to the servo IC.

(5) CPU operation state display by LED
For each CPU, LEDs that display each operation state are mounted on the board. D711 displays the operation state of the servo CPU, and D800 displays the operation state of the drum MPU. Each LED blinks at intervals of approximately 1 Hz if the operation state is normal.
Moreover, D800 displays the drum operation state by the duty cycle of the blink. The operation of the LED that lights for a longer time indicates "DRUM LOCK". The operation of the LED that goes off for a longer time indicates "DRUM UNLOCK".

CR5-1BPS PB mode

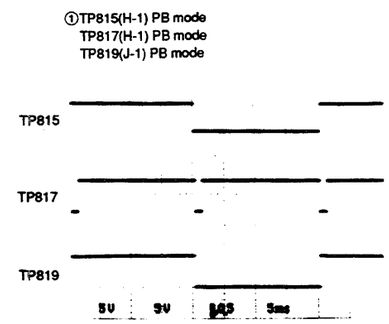

ZR5-1P

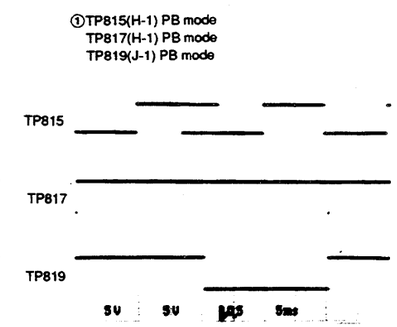

ZR2-1P

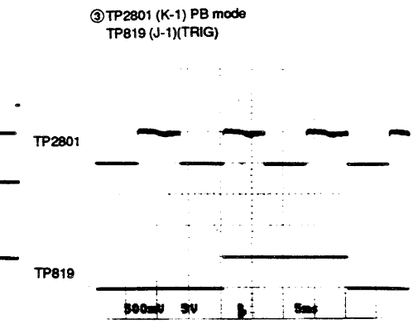

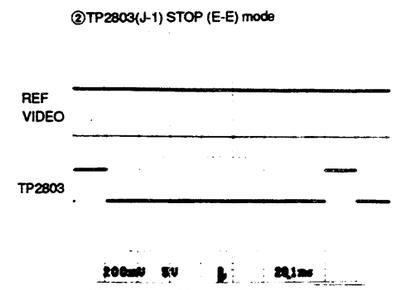

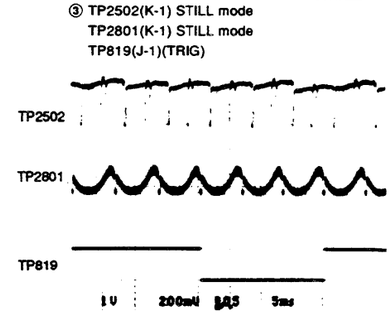

Measurement Condition
MODE : PB mode
: STOP (E-E) mode
: STILL mode
TAPE : ZR5-1P
: ZR2-1P
: CR5-1BPS

SS-52 Board -A Side-

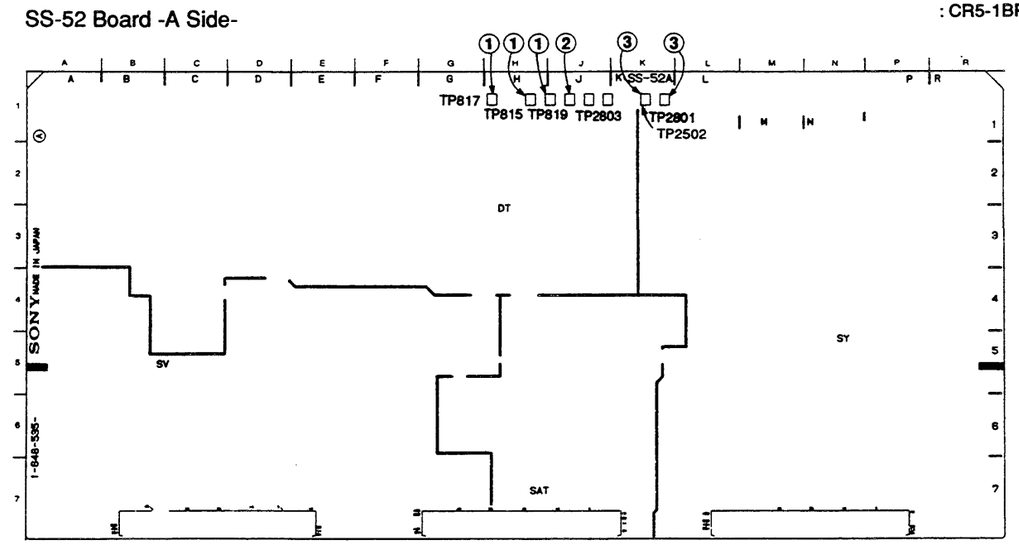

3-55

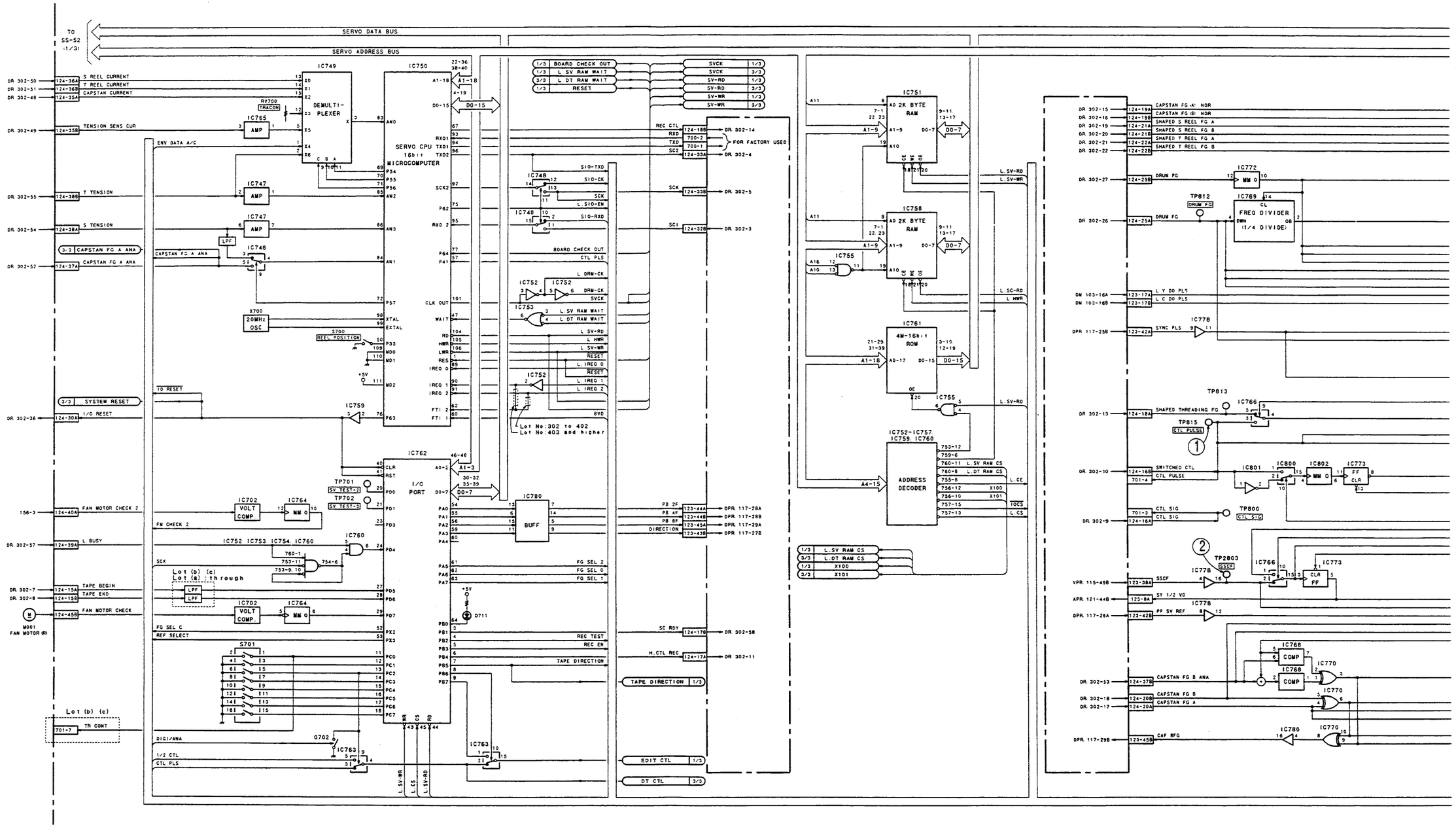
TO SS-52 (1/3)
SERVO DATA BUS
SERVO ADDRESS BUS
IC749
DEMULTI-PLEXER
IC750
SERVO CPU 16bit MICROCOMPUTER
IC751
2K BYTE RAM
IC758
2K BYTE RAM
IC761
4M-16bit ROM
ADDRESS DECODER
IC762
I/O PORT
IC780
BUFF
IC772
FREQ DIVIDER (11/4 DIVIDER)
IC769
IC778
IC766
IC768
COMP
IC770
IC773
FF
IC800
IC801
IC802
IC702
VOLT COMP
IC764
MM O
IC765
AMP
IC747
IC748
IC752
IC753
IC754
IC755
IC759
IC760
IC763
20MHz OSC
S700 REEL POSITION
S701
Q702
D711
M001 FAN MOTOR (R)
TP701
TP702
TP800
TP812
TP813
TP815
TP2803
S REEL CURRENT
T REEL CURRENT
CAPSTAN CURRENT
TENSION SENS CUR
T TENSION
S TENSION
CAPSTAN FG A ANA
SYSTEM RESET
I/O RESET
FAN MOTOR CHECK 2
L BUSY
TAPE BEGIN
TAPE END
FAN MOTOR CHECK
TR CONT
CAPSTAN FG (A) NOR
CAPSTAN FG (B) NOR
SHAPED S REEL FG A
SHAPED S REEL FG B
SHAPED T REEL FG A
SHAPED T REEL FG B
DRUM PG
DRUM FG
L Y DO PLS
L C DO PLS
SYNC PLS
SHAPED THREADING FG
SWITCHED CTL
CTL PULSE
CTL SIG
SSCF
SY 1/2 VD
PP SV REF
CAPSTAN FG B ANA
CAPSTAN FG B
CAPSTAN FG A
CAP BFG
BOARD CHECK OUT
L SV RAM WAIT
L DT RAM WAIT
RESET
SVCK
SV-RD
SV-WR
REC CTL
RXD
TXD
SCK
SC1
FOR FACTORY USED
SIO-TXD
SIO-CK
L SIO-EN
SIO-RXD
L DRM-CK
DRM-CK
L SV-RD
L SV-WR
L IREQ 0
L IREQ 1
L IREQ 2
PB 2F
PB 4F
PB 8F
DIRECTION
SC RDY
M CTL REC
TAPE DIRECTION
EDIT CTL
DT CTL
L SV RAM CS
L DT RAM CS
X100
X101
L CE
L CS
FG SEL 2
FG SEL 0
FG SEL 1
REC TEST
REC EN
FG SEL C
REF SELECT
DIGI/ANA
1/2 CTL
CTL PLS
Lot No:302 to 402
Lot No:403 and higher
Lot (b) (c) through
Lot (a)
Lot (b) (c)

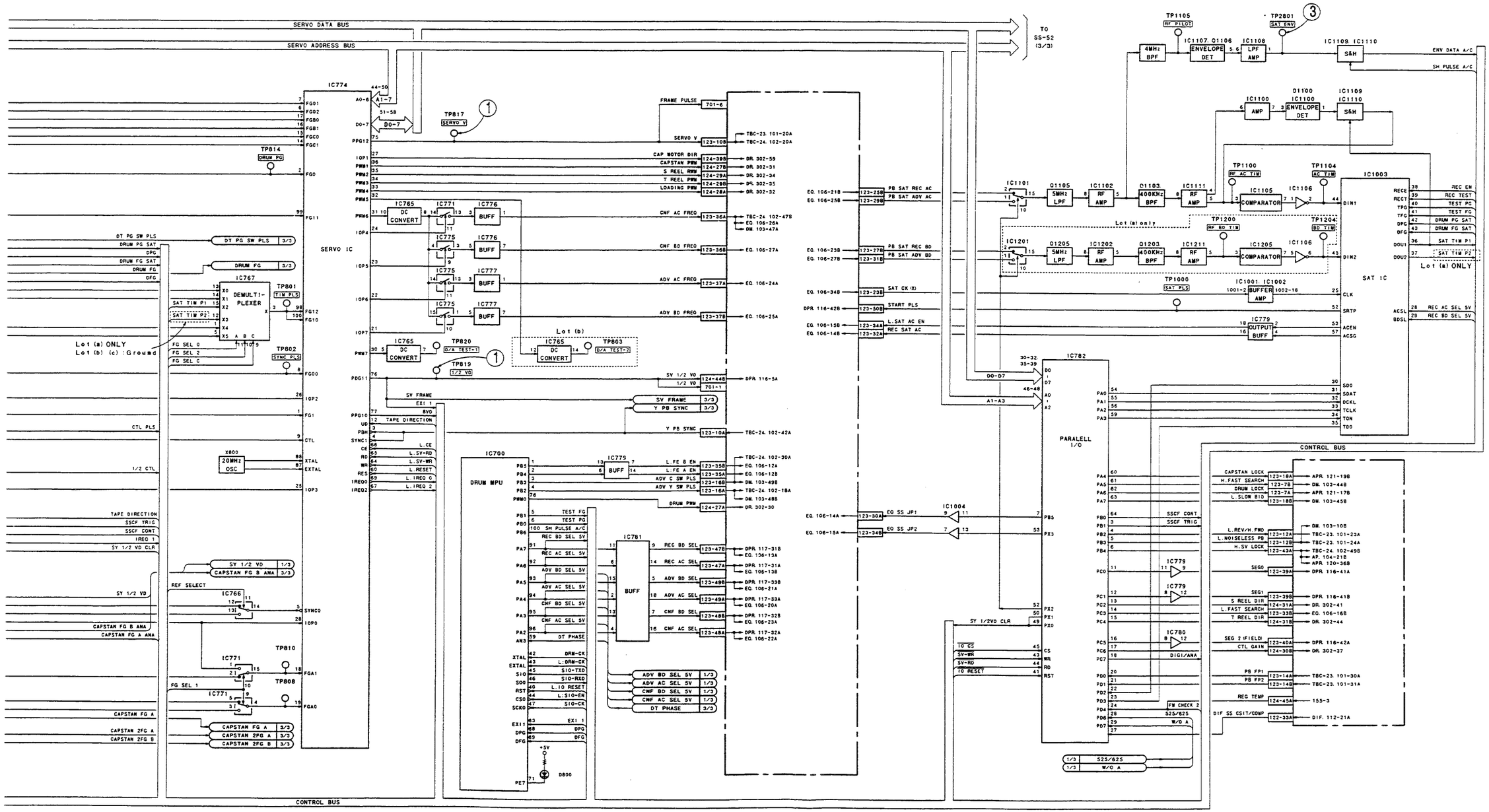

This block diagram corresponds to the production lots of Lot No.302 and higher.
Circuit sections that any midway change occured are shown using the abbreviation mentioned below.

abbrev.	Lot No.	Board NO.
Lot (a)	302-306	1-648-535-11/21
Lot (b)	307-410	1-648-535-12/22
Lot (c)	411-	1-648-535-13/23

Servo Control
SS-52 (2/3)
DVW-A500/500
DVW-A500P/500P

 SS-52 (3/3)

[CIRCUIT DESCRIPTION OF SS-52 BOARD (3/3)]

SS-52 board (3/3) is a DT control system block that detects a tracking error from the PB signal of the DT head, generates a bimorph drive signal together with the feedback data processing result, and sends it to DT-34 board (bimorph drive board) for dynamic tracking.

DT control system configuration
- DT system control block
  - DT CPU system
  - Servo IC
- Tracking error detection block
  - Wobbling signal generator circuit
  - Digital tracking error detector circuit
  - Analog tracking error detector
- Bimorph control block
  - Bimorph control circuit
  - Bimorph drive circuit (DT-34 board)

The outline of each block is described below.

(1) DT system control block
The DT system control block consists of a DT CPU system (consisting of a DT CPU (IC2104), address decoder (IC2108), ROM (IC2110), and I/O port (IC2109)) and a servo IC (IC2200).
The DT CPU communicates with the servo CPU via the dual port RAM (IC2113 and IC2115), performs detection processing for the feedback data jointly with the servo IC, and controls the DT system according to the result.
The servo IC detects the tape speed from capstan FG signals, calculates the timing of the tracking from a CTL PB signal, and sends the calculated tracking data and others in the form of PWM signal to the bimorph control circuit.

(2) Tracking error detection block
Since a digital Betacam tape has a narrow track width and high trace speed, the degree and direction of a tracking error are detected from the envelope waveform of a PB RF signal by wobbling the DT head (ADVANCE head) in the PB mode. For an analog Betacam tape, the tracking data generated in the DT system control block is corrected from the PB RF level detection and from the PB phase difference detection between channels Y and C by IC2401, as before.
- Wobbling signal generator circuit

Wobbling data is generated by three CTC counters (IC2202, IC2204, and IC2207), converted into a wobbling signal of 1.5 kHz by a D/A converter (IC2210), and added to bimorph drive signals in the mode of "WOBBLING ON".
The timing pulses generated by the above CTC counters are sent through an wobbling control circuit (IC2100, IC2205, and IC2209) to the tracking error detector circuit to control the timing of the error detection.
- Digital tracking error detector circuit

The ADVANCE head is wider in width than the REC head. Two ADVANCE heads are installed on one bimorph plate in pairs so that the portions of the remaining width protrude from the both outsides of the tracks recorded in pairs.
When the bimorph plate wobbles, if the head deflects to the outside of pair tracks, the track width that can be reproduced decreases. Therefore, the amplitude of the PB RF signal decreases.
If the head deflects to the inside of pair tracks, the portion of the head got in the adjacent track cannot reproduce because the azimuth angle differs. However, since the outer edge of the track is covered by the portion of the remaining width of the head, the track width that can be reproduced does not change. For the adjacent head, the same change described above appears in an opposite phase.
If a tracking error occurs, the above change appears more remarkably in the shifted outside head. In the inside head, the change decreases. Therefore, a wobbling component (1.5 kHz) is extracted from the envelope waveform of the PB RF signal in each head, and the difference is obtained using a differential amplifier. As a result, the degree and direction of the tracking error can be detected.
IC2500 to IC2508 are a digital tracking error detector circuit. For the envelope waveform of the PB RF signal from EQ-45 board, only the video RF portion is extracted in the timing of the "PEAK HOLD OFF" signal from a wobbling control circuit, and a wobbling component is taken out using a bandpass filter of 1.5 kHz and half-wave rectified. The resultant half-wave rectification output signals in a pair channel are input to the differential amplifier to taken out the difference and passed through a low-pass filter. As the result, a DC voltage whose polarity and dimensions correspond to the direction and degree of the tracking error is obtained. This voltage is fed back to the bimorph control circuit in the corresponding channel in the mode of "WOBB A/B ON" or "WOBB C/D ON".

(3) Bimorph control block
IC2300 to IC2305 and IC2700 to IC2705 are a bimorph control circuit. In principle, the feedback strain gauge signal and the tracking data calculated by a DT system control block are compared using phase compensators (IC2300 and IC2700), and the difference voltage is output as a bimorph drive signal.
Tracking error detection data is fed back in the course of a tracking data circuit for a digital tape to correct the tracking data. For an analog tape, the tracking error detection data is fed back to the DT system control block to correct the tracking data. Moreover, for a digital tape, a wobbling signal is added to the bimorph drive signal.
An "STG OFFSET" signal contains a same noise component as in the strain gauge signal and is used to cancel the noise. The gain djustment is performed by changing the ON/OFF duty cycle of a charge/dischage switch by a PWM signal. A "TRACK SIGN" signal inverts the polarity of a "TRACKING" signal. The band eliminators (IC2305 and IC2705) in the later stage are used to eliminate bimorph resonant frequency component of 700 to 800 Hz.

CR5-1BPS

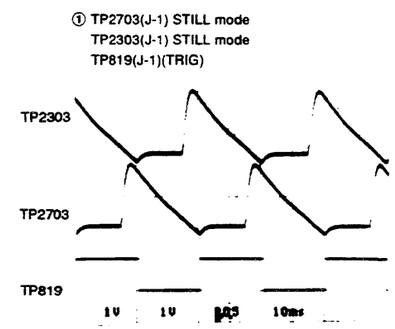

ZR5-1P

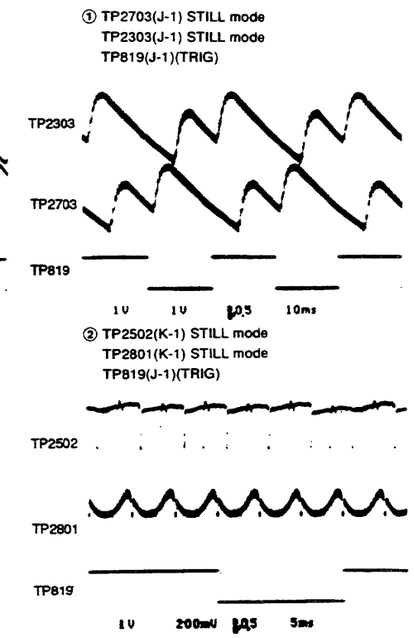

Measurement Condition
MODE : STILL mode
TAPE : ZR5-1P
: CR5-1BPS

SS-52 Board -A Side-

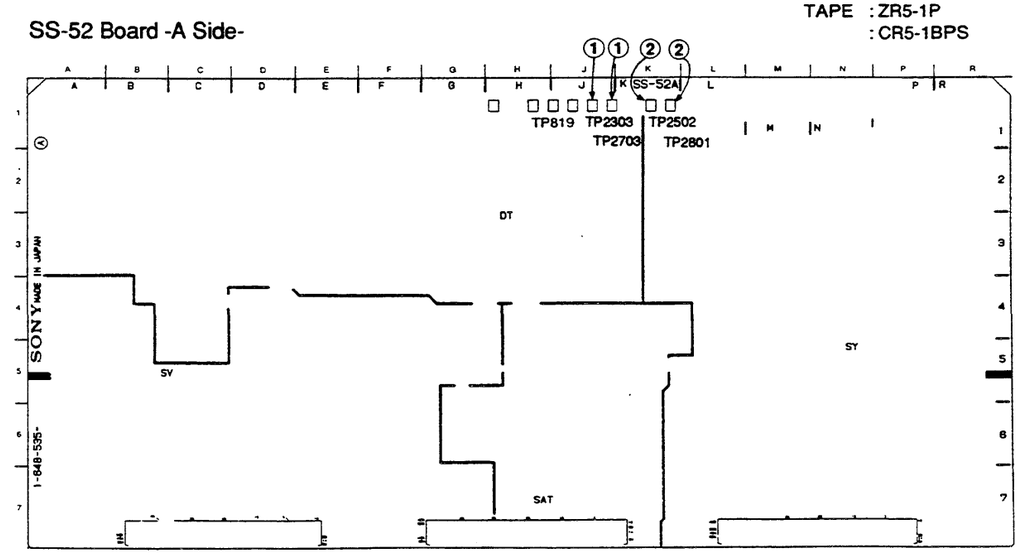

3-59

SS-52 (3/3)

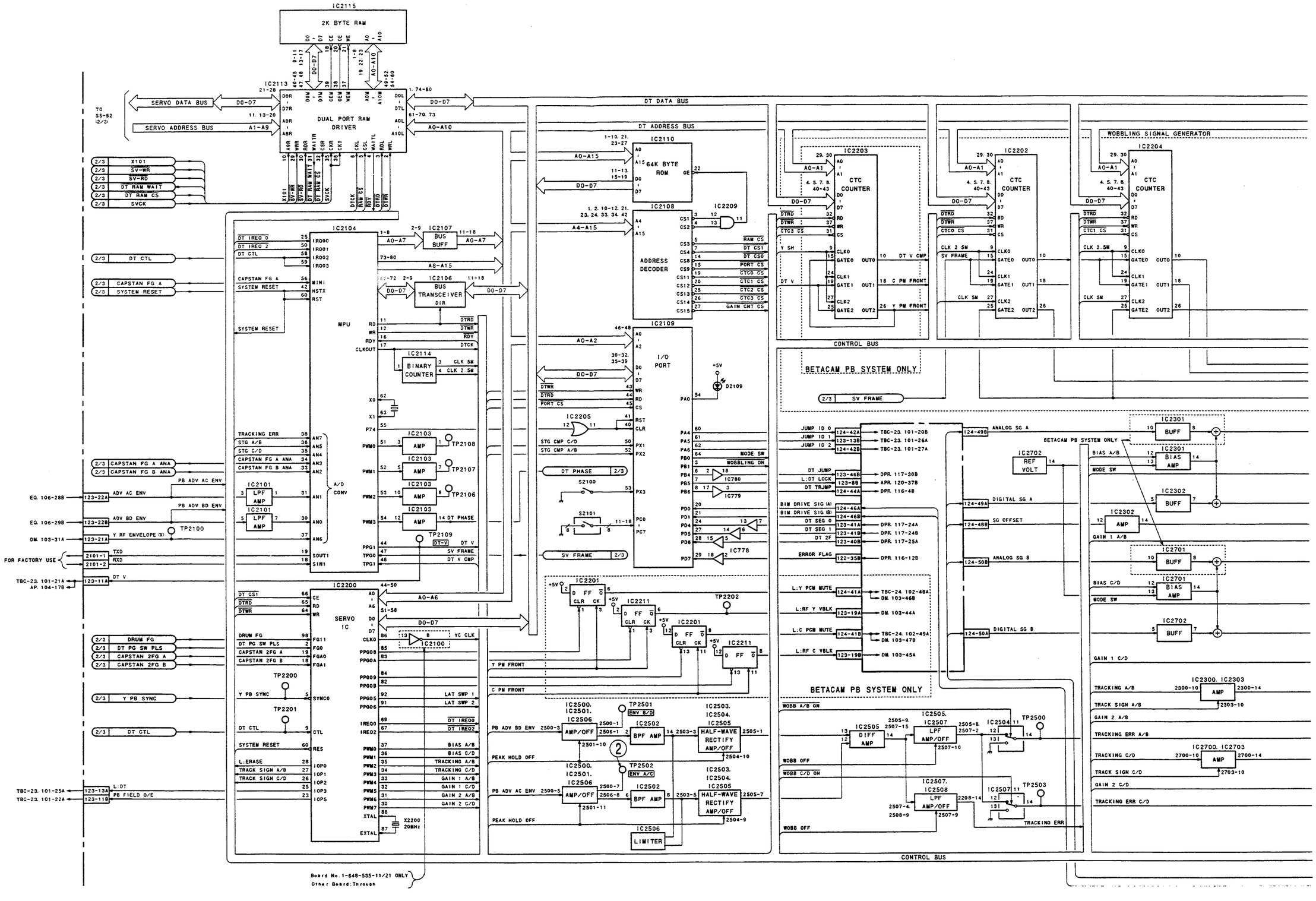
IC2115
2K BYTE RAM
IC2113
DUAL PORT RAM DRIVER
SERVO DATA BUS
SERVO ADDRESS BUS
DT DATA BUS
DT ADDRESS BUS
IC2110
64K BYTE ROM
IC2108
ADDRESS DECODER
IC2109
I/O PORT
IC2104
MPU
IC2107
BUS BUFF
IC2106
BUS TRANSCEIVER
IC2114
BINARY COUNTER
IC2103
AMP
IC2101
LPF AMP
A/D CONV
IC2200
SERVO IC
IC2203
IC2202
IC2204
CTC COUNTER
WOBBLING SIGNAL GENERATOR
CONTROL BUS
BETACAM PB SYSTEM ONLY
IC2301
BUFF
IC2302
BIAS AMP
IC2701
IC2702
REF VOLT
IC2300, IC2303
IC2700, IC2703
IC2500, IC2501
IC2506
AMP/OFF
IC2502
BPF AMP
IC2505
HALF-WAVE RECTIFY AMP/OFF
IC2506
LIMITER
IC2505
DIFF AMP
IC2507
LPF AMP/OFF
IC2508
IC2504
IC2507
TP2500
TP2503
TP2100
TP2108
TP2107
TP2106
TP2109
TP2200
TP2201
TP2202
TP2501
TP2502
X2200 20MHz
Board No. 1-648-535-11/21 ONLY
Other Board: Through

3-60

 SS-52 (3/3)

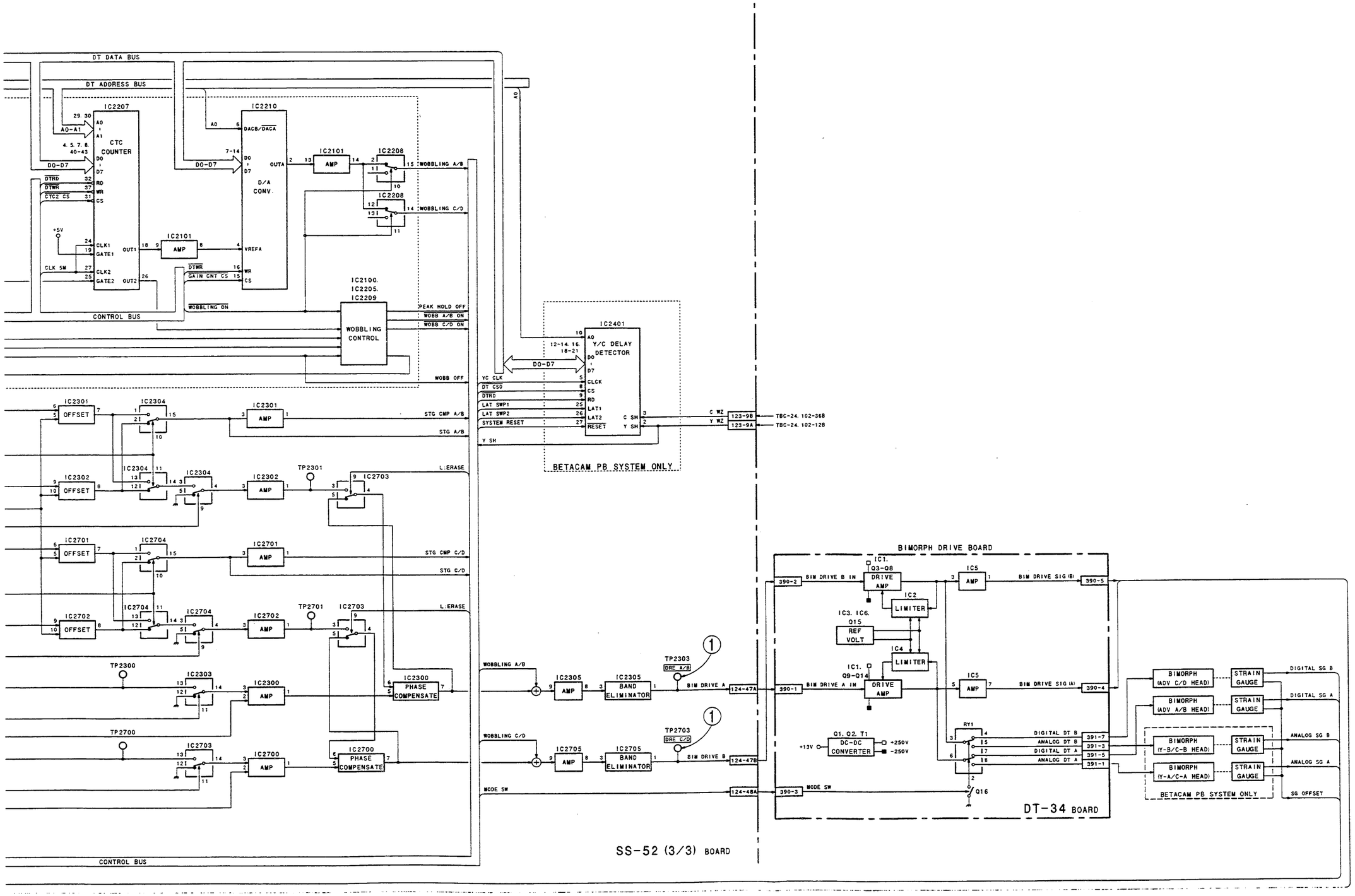

Dynamic Tracking
SS-52 (3/3) **DT-34**
DVW-A500/500
DVW-A500P/500P

 3-61

[CIRCUIT DESCRIPTION OF DR-307 BOARD]

DR-307 board is a servo driver board that drives the mechanical devices of each mechanical block under the control from a servo control block (on SS-52 board (2/3)), receives various sensor and FG signals, and feeds them back to the servo control block. DR-307 board also mounts the REC/PB amplifier of a CTL signal.

The configuration of DR-307 board is summarized as described below.

- Four-bit MPU (IC106) that exchanges data and commands with the servo CPU on SS-52 board (2/3) by serial communication.
- Four switching drivers that drive the motors (drum, capstan, and supply and take-up reel motors) in the tape transport system.
- Three two-way switch drivers that drive the motors (loading, position, and cassette compartment up/down motors) in the loading system.
- Five drive amplifiers that drive the solenoids (pinch, supply and take-up reel brake, and cleaning solenoids) and CC lamp.
- Wave shaping amplifiers of each FG pulse (drum, capstan, supply and take-up reel, and loading FGs).
- Detection amplifiers of tape tensions (supply and take-up tensions).
- Detection amplifier of tape ends (tape top and end).
- CTL signal REC/PB amplifier.

A complementary explanation is given for the contents of the above description.

(1) Servo driver MPU
The serial data from the servo CPU on SS-52 board is converted into parallel data by this MPU (IC106) and sent to each block on DR-307 board. This data is partially used to drive the solenoids via drive amplifiers. The signal that is fed back from each sensor is sent to this MPU as parallel data, converted into serial data, and sent to the servo CPU on SS-52 board.
An EEPROMs (IC101) save the servo- and DT-related adjustment data.

(2) Tape transport system motor drive
The drum motor, capstan motor, supply reel motor, and take-up reel motor that constitute the tape transport system require a high-precision control. Therefore, motor drivers for these motors receive the control signals that are sent from SS-52 board by PWM signals and perform the analog drive control by switching drivers.
That is, the chopper type switching regulator (drive voltage generator circuit) that uses a PWM power controller IC converts the voltage of +18 V supplied from the power supply block into the voltage proportional to the control signal from SS-52 board to control the motor speed.
Take the case of the drum motor driver so as to describe the theory of the switching regulator. The “DRUM PWM” control signal from SS-52 board is sent to a low-pass filter to produce a DC signal and compared with the voltage that is fed back from the output side of the regulator in the input stage of an operational amplifier (IC112). As the result, a PWM pulse whose pulse width varies depending on the difference voltage (error voltage) is output from IC112. This pulse drives the gate of a switching FET (Q110) via IC8. When Q110 is OFF, the current flows continuously through a flywheel diode (D104) into the inductor to charge the capacitor, by the current energy holding effect of inductor. The balanced output voltage value varies with the modulation ratio of a PWM pulse and the capacity of an output current. However, the modulation ratio of the PWM pulse is controlled so that the output voltage becomes a control target value by feeding an output voltage back to IC112.
The basic operation of the switching regulator is as described above. Since the drum motor is a three-phase brushless motor, a three-phase switching circuit that supplies a current to each winding according to the three-phase control signal (output signal of Hall device amplifier) from the drum is provided after the switching regulator.
The capstan motor incorporates a three-phase switching circuit. The rotating direction of the capstan motor is directly switched by the “CAPSTAN MOTOR DIR” signal that is sent from SS-52 board via DR-307 board. Therefore, the capstan motor operates by only sending a drive voltage from DR-307 board.
The switching regulator uses an output current detection voltage for a fed back voltage and functions as a current control type regulator.
The reel motor driver is a dual switching regulator in which switching regulators are connected to both terminals of a DC motor. This reel motor driver feeds back the detection voltage of an output current occurring due to the voltage difference at both terminals to control each output voltage. In each switching converter that constitutes this regulator, a switching FET that makes a complementary pair with a drive switching FET is used instead of the flywheel diode.

(3) Loading system motor driver
For the motors in the loarding system, there are a loarding motor (threading motor), position motor (reel shift motor), and cassette compatment motor (up/down motor). These motor are DC motors and are driven by two-way switch driver ICs. This IC can select four states (forward rotation, reverse rotation, short-brake, and open) by two control lines.
The switching converter controlled by the “LOADING PWM” pulse from SS-52 board is used in the driver power source for the loading motor, so can also control the rotation torque of the loarding motor.

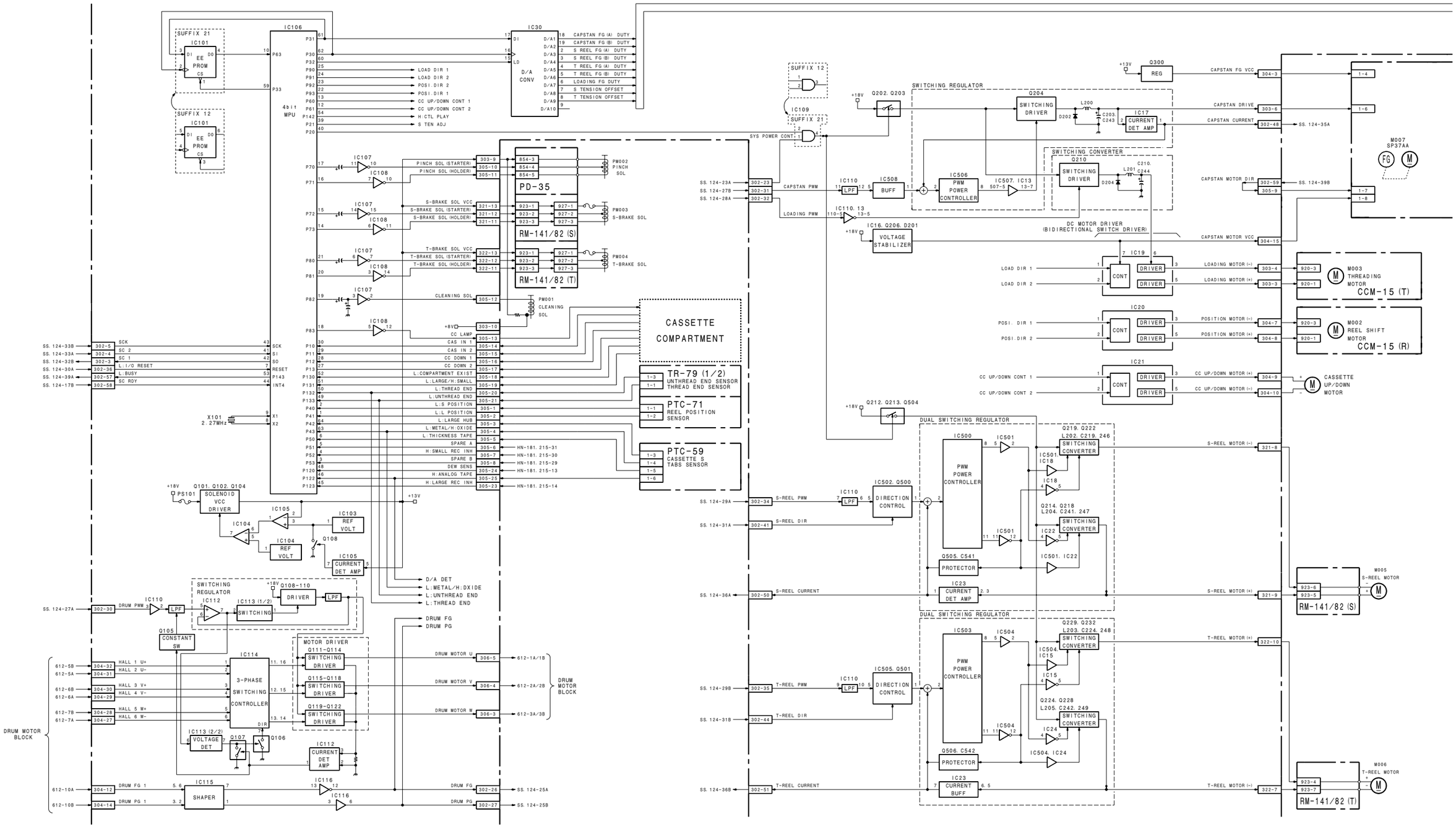

DVW-A500/500
DVW-A500P/500P
DVW-A510/510
DVW-A510P/510P
DVW-CA510/CA510P

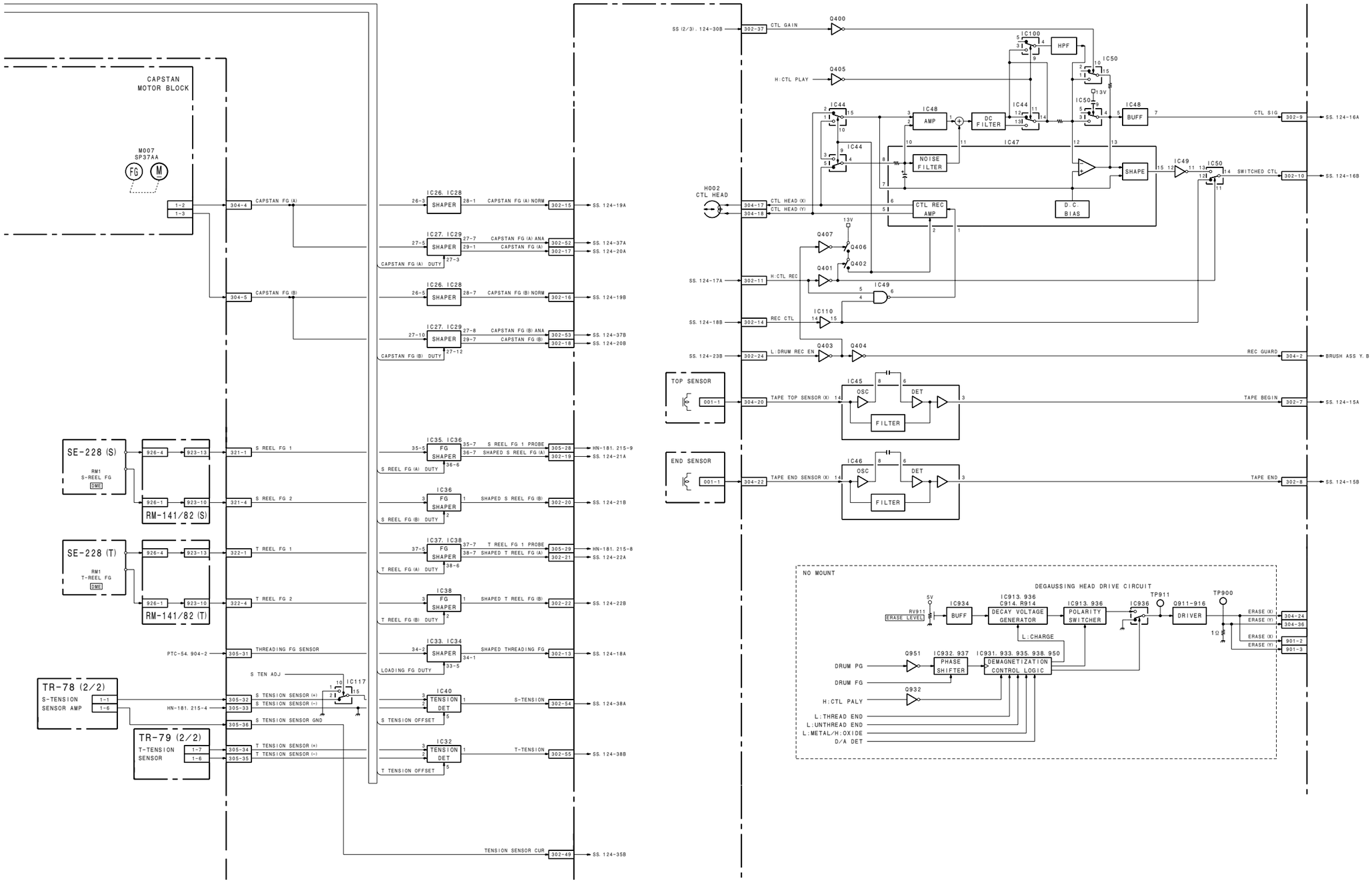

Servo Drive

DR-307

DVW-A500/500
DVW-A500P/500P
DVW-A510/510
DVW-A510P/510P
DVW-CA510/CA510P

[CIRCUIT DESCRIPTION OF DR-200 BOARD]

DR-200 board is a servo driver board that drives the mechanical devices of each mechanical block under the control from a servo control block (on SS-52 board (2/3)), receives various sensor and FG signals, and feeds them back to the servo control block. DR-200 board also mounts the REC/PB amplifier of a CTL signal.

The configuration of DR-200 board is summarized as described below.

- Four-bit MPU (IC3) that exchanges data and commands with the servo CPU on SS-52 board (2/3) by serial communication.
- Four switching drivers that drive the motors (drum, capstan, and supply and take-up reel motors) in the tape transport system.
- Three two-way switch drivers that drive the motors (loading, position, and cassette compartment up/down motors) in the loading system.
- Five drive amplifiers that drive the solenoids (pinch, supply and take-up reel brake, and cleaning solenoids) and CC lamp.
- Wave shaping amplifiers of each FG pulse (drum, capstan, supply and take-up reel, and loading FGs).
- Detection amplifiers of tape tensions (supply and take-up tensions).
- Detection amplifier of tape ends (tape top and end).
- CTL signal REC/PB amplifier.

A complementary explanation is given for the contents of the above description.

(1) Servo driver MPU
The serial data from the servo CPU on SS-52 board is converted into parallel data by this MPU (IC3) and sent to each block on DR-200 board. This data is partially used to drive the solenoids via drive amplifiers. The signal that is fed back from each sensor is sent to this MPU as parallel data, converted into serial data, and sent to the servo CPU on SS-52 board.
Two EEPROMs (IC10 and IC25) save the servo- and DT-related adjustment data under the same contents and back up it mutually.

(2) Tape transport system motor drive
The drum motor, capstan motor, supply reel motor, and take-up reel motor that constitute the tape transport system require a high-precision control. Therefore, motor drivers for these motors receive the control signals that are sent from SS-52 board by PWM signals and perform the analog drive control by switching drivers.
That is, the chopper type switching regulator (drive voltage generator circuit) that uses a PWM power controller IC converts the voltage of +18 V supplied from the power supply block into the voltage proportional to the control signal from SS-52 board to control the motor speed.
Take the case of the drum motor driver so as to describe the theory of the switching regulator. The “DRUM PWM” control signal from SS-52 board is sent to a low-pass filter (IC39) to produce a DC signal and compared with the voltage that is fed back from the output side of the regulator in the input stage of a PWM power controller (IC700). As the result, a PWM pulse whose pulse width varies depending on the difference voltage (error voltage) is output from IC700. This pulse drives the gate of a switching FET (Q106) via IC8. When Q106 is OFF, the current flows continuously through a flywheel diode (D102) into the inductor to charge the capacitor, by the current energy holding effect of inductor. The balanced output voltage value varies with the modulation ratio of a PWM pulse and the capacity of an output current. However, the modulation ratio of the PWM pulse is controlled so that the output voltage becomes a control target value by feeding an output voltage back to IC700.
The basic operation of the switching regulator is as described above. Since the drum motor is a three-phase brushless motor, a three-phase switching circuit that supplies a current to each winding according to the three-phase control signal (output signal of Hall device amplifier) from the drum is provided after the switching regulator.
The capstan motor incorporates a three-phase switching circuit. The rotating direction of the capstan motor is directly switched by the “CAPSTAN MOTOR DIR” signal that is sent from SS-52 board via DR-200 board. Therefore, the capstan motor operates by only sending a drive voltage from DR-200 board.
The switching regulator uses an output current detection voltage for a fed back voltage and functions as a current control type regulator.
The reel motor driver is a dual switching regulator in which switching regulators are connected to both terminals of a DC motor. This reel motor driver feeds back the detection voltage of an output current occurring due to the voltage difference at both terminals to control each output voltage.
The PWM power controller outputs an in-phase PWM pulse from pins 8 and 11, fluctuates the voltages at both terminals in the opposite directon according to the duty cycle ratio of the PWM pulse, and drives the motor differentially. In each switching converter that constitutes this regulator, a switching FET that makes a complementary pair with a drive switching FET is used instead of the flywheel diode.

(3) Loading system motor driver
For the motors in the loarding system, there are a loarding motor (threading motor), position motor (reel shift motor), and cassette compatment motor (up/down motor). These motor are DC motors and are driven by two-way switch driver ICs. This IC can select four states (forward rotation, reverse rotation, short-brake, and open) by two control lines.
The switching converter controlled by the “LOADING PWM” pulse from SS-52 board is used in the driver power source for the loading motor, so can also control the rotation torque of the loarding motor.

DVW-A500P (EK):	S/N 10001 through 21137
DVW-A500P (UC):	S/N 10001 through 10308
DVW-A500 (J):	S/N 10001 through 12788
DVW-A500 (UC):	S/N 10001 through 18302
DVW-500P (EK):	S/N 10001 through 16515
DVW-500P (UC):	S/N 10001 through 10210
DVW-500 (J):	S/N 10001 through 10363
DVW-500 (UC):	S/N 10001 through 13179
DVW-A510P (EK):	S/N 10001 through 14220
DVW-A510 (J):	S/N 10001 through 10684
DVW-A510 (UC):	S/N 10001 through 11583
DVW-510P (EK):	S/N 10001 through 11354
DVW-510 (J):	S/N 10001 through 10100
DVW-510 (UC):	S/N 10001 through 10762
DVW-CA510P (EK):	S/N 10001 through 10075
DVW-CA510 (J):	S/N 10001
DVW-CA510 (UC):	S/N 10001 through 10015

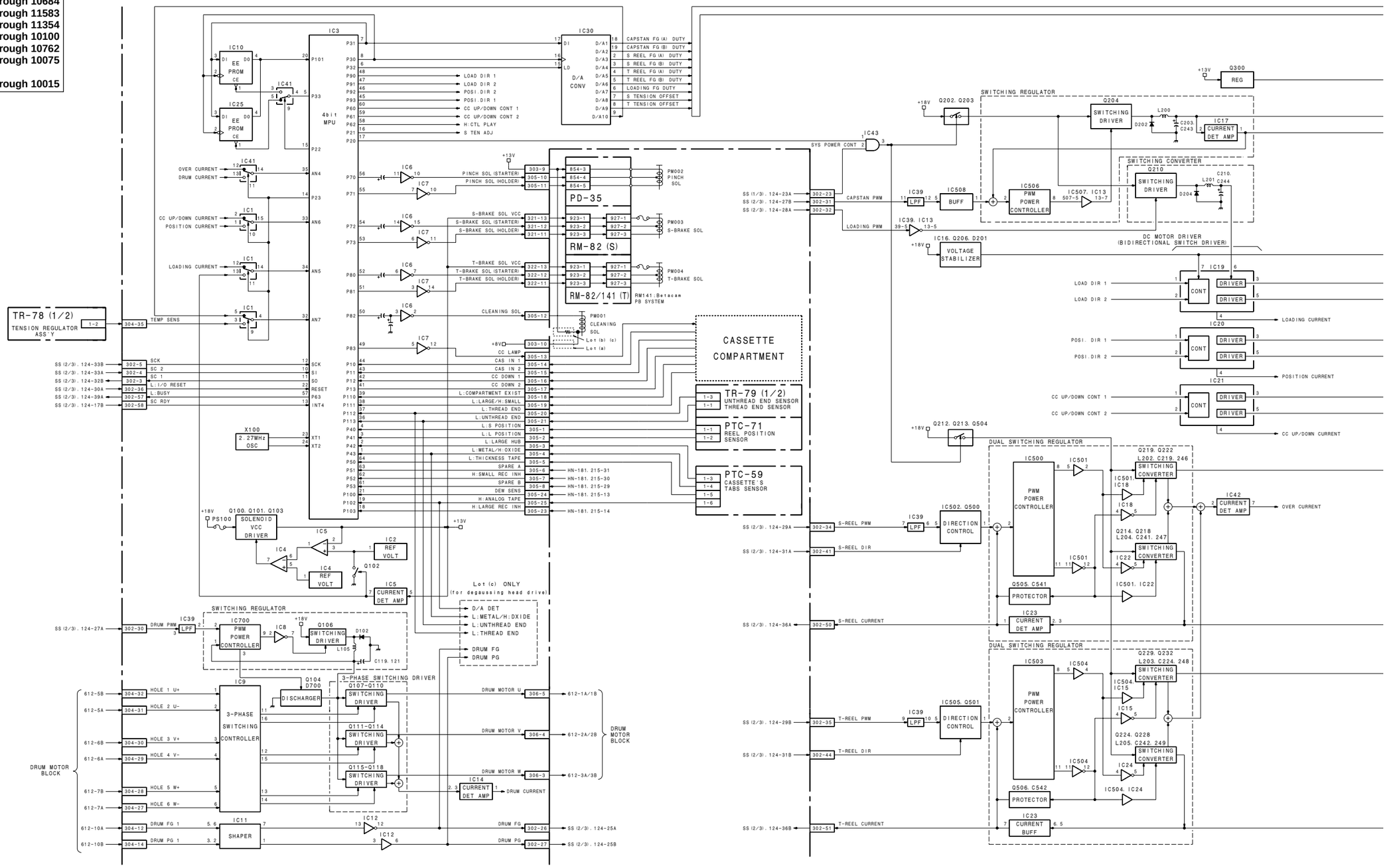

3-64 (a)

DVW-A500/500
DVW-A500P/500P
DVW-A510/510
DVW-A510P/510P
DVW-CA510/CA510P

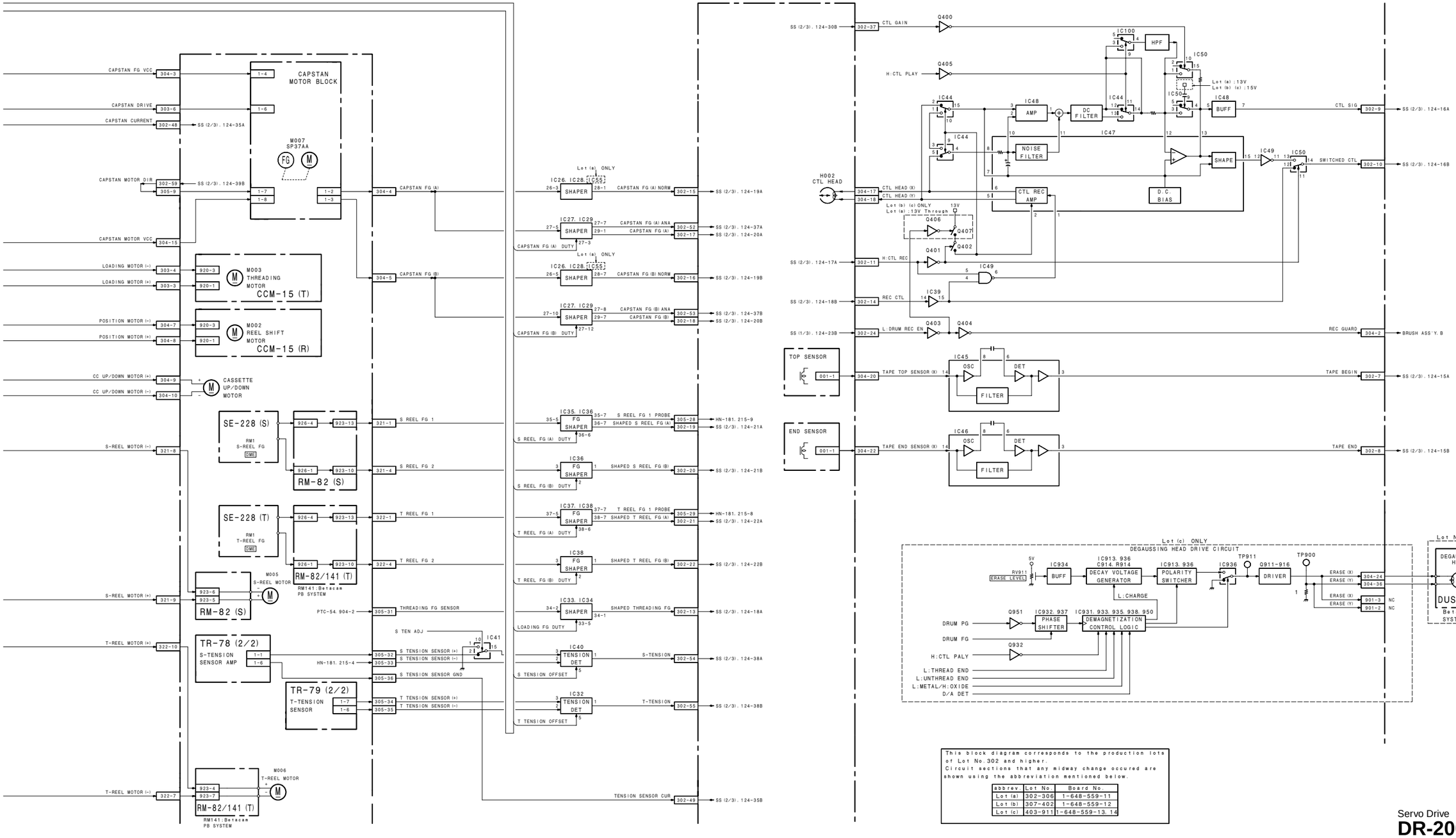

This block diagram corresponds to the production lots of Lot No.302 and higher.
Circuit sections that any midway change occured are shown using the abbreviation mentioned below.

abbrev.	Lot No.	Board No.
Lot (a)	302-306	1-648-559-11
Lot (b)	307-402	1-648-559-12
Lot (c)	403-911	1-648-559-13, 14

Servo Drive
DR-200
DVW-A500/500
DVW-A500P/500P
DVW-A510/510
DVW-A510P/510P
DVW-CA510/CA510P

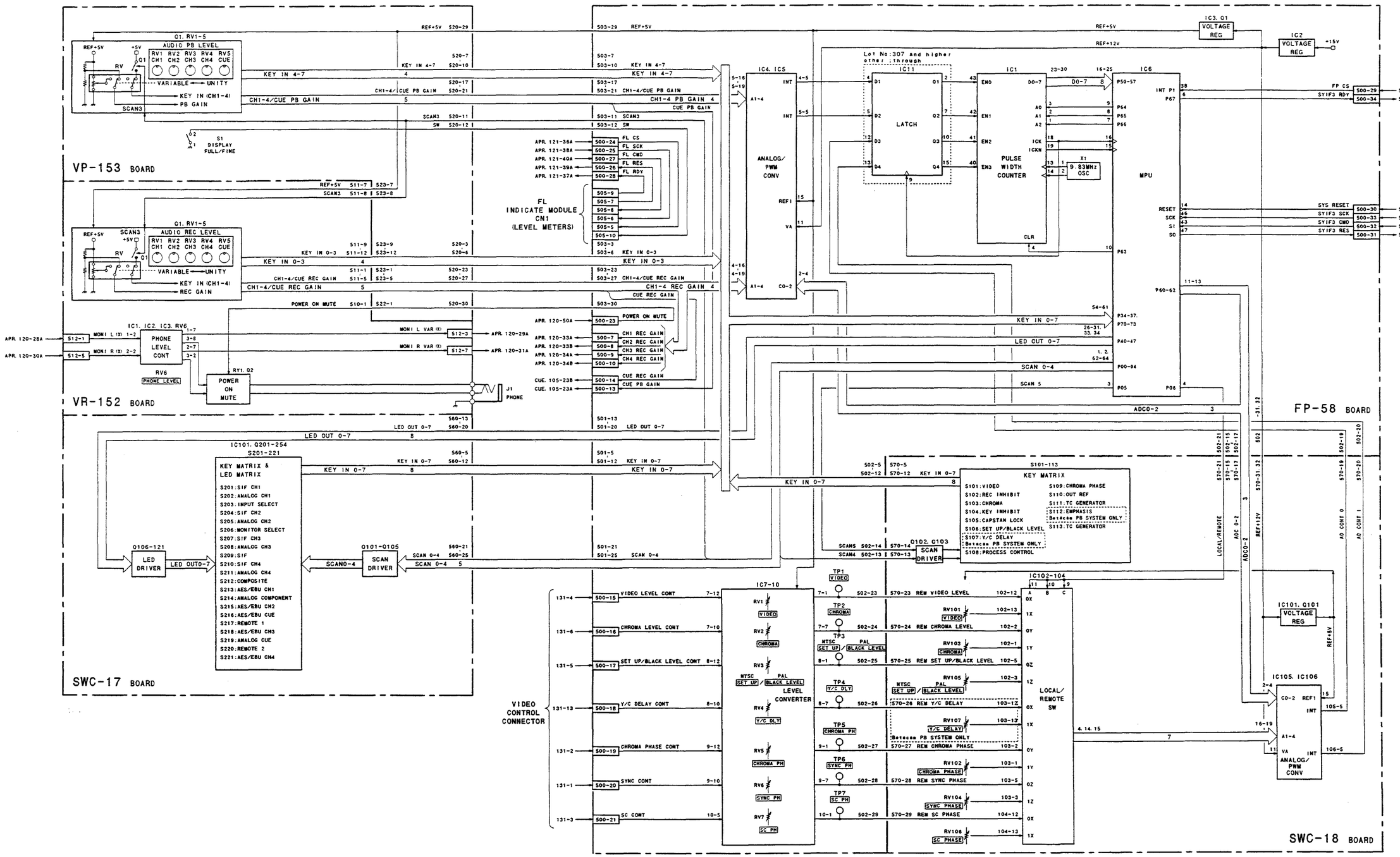
VP-153 BOARD
VR-152 BOARD
SWC-17 BOARD
SWC-18 BOARD
FP-58 BOARD
AUDIO PB LEVEL
AUDIO REC LEVEL
PHONE LEVEL CONT
POWER ON MUTE
KEY MATRIX & LED MATRIX
LED DRIVER
SCAN DRIVER
FL INDICATE MODULE CN1 (LEVEL METERS)
ANALOG/ PWM CONV
LATCH
PULSE WIDTH COUNTER
MPU
VOLTAGE REG
KEY MATRIX
VIDEO CONTROL CONNECTOR
LEVEL CONVERTER
LOCAL/ REMOTE SW

 FUNCTION CONTROL

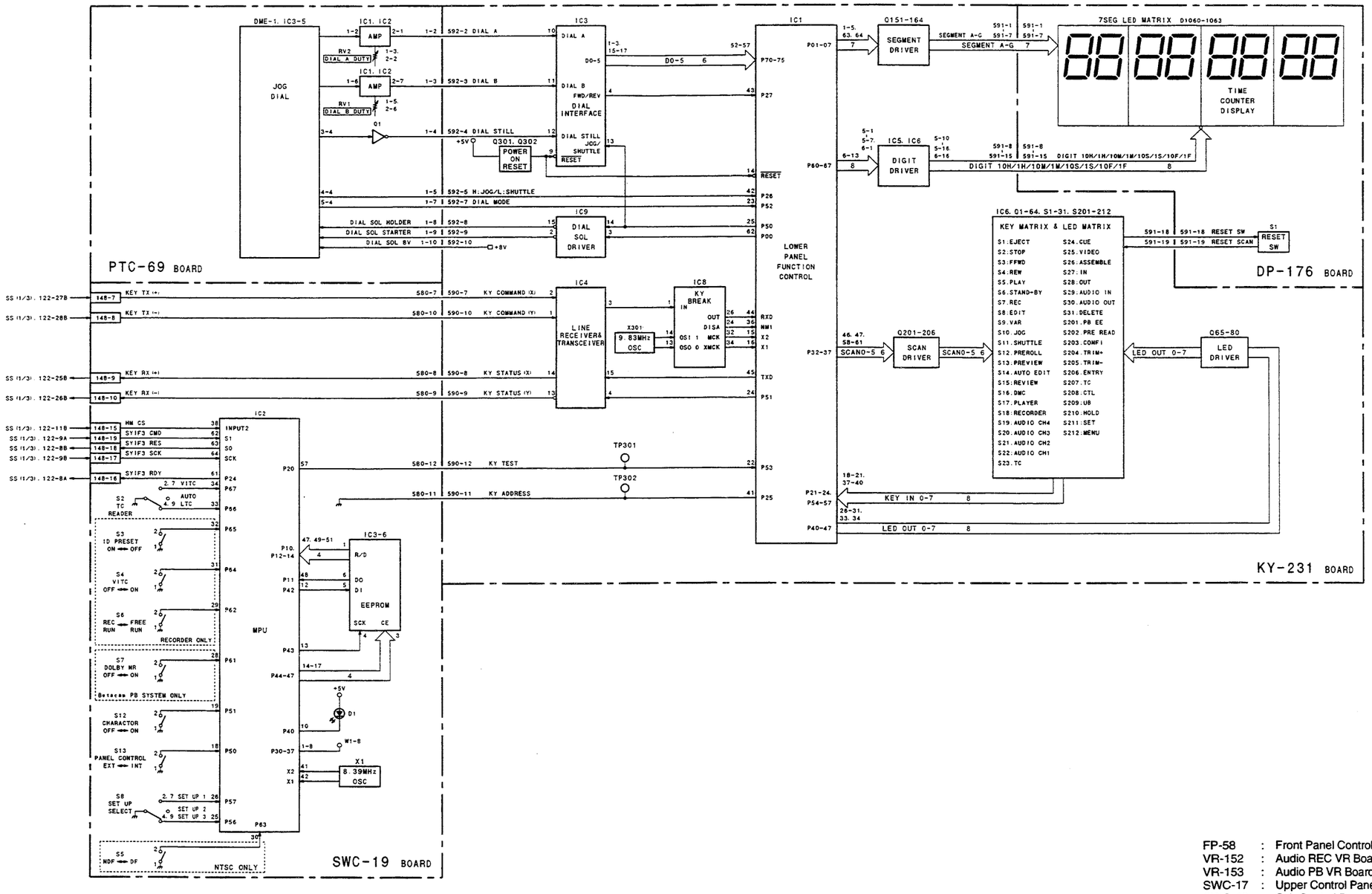

FP-58 : Front Panel Control Board
VR-152 : Audio REC VR Board
VR-153 : Audio PB VR Board
SWC-17 : Upper Control Panel Board
SWC-18 : Sub Control Panel Board
SWC-19 : System Set-up Panel Board
KY-231 : Lower Control Panel Board
DP-176 : Time Counter Display Board
PTC-69 : Search Dial Assembly Board

FUNCTION CONTROL BLOCK

DVW-A500/500
DVW-A500P/500P

 3-67

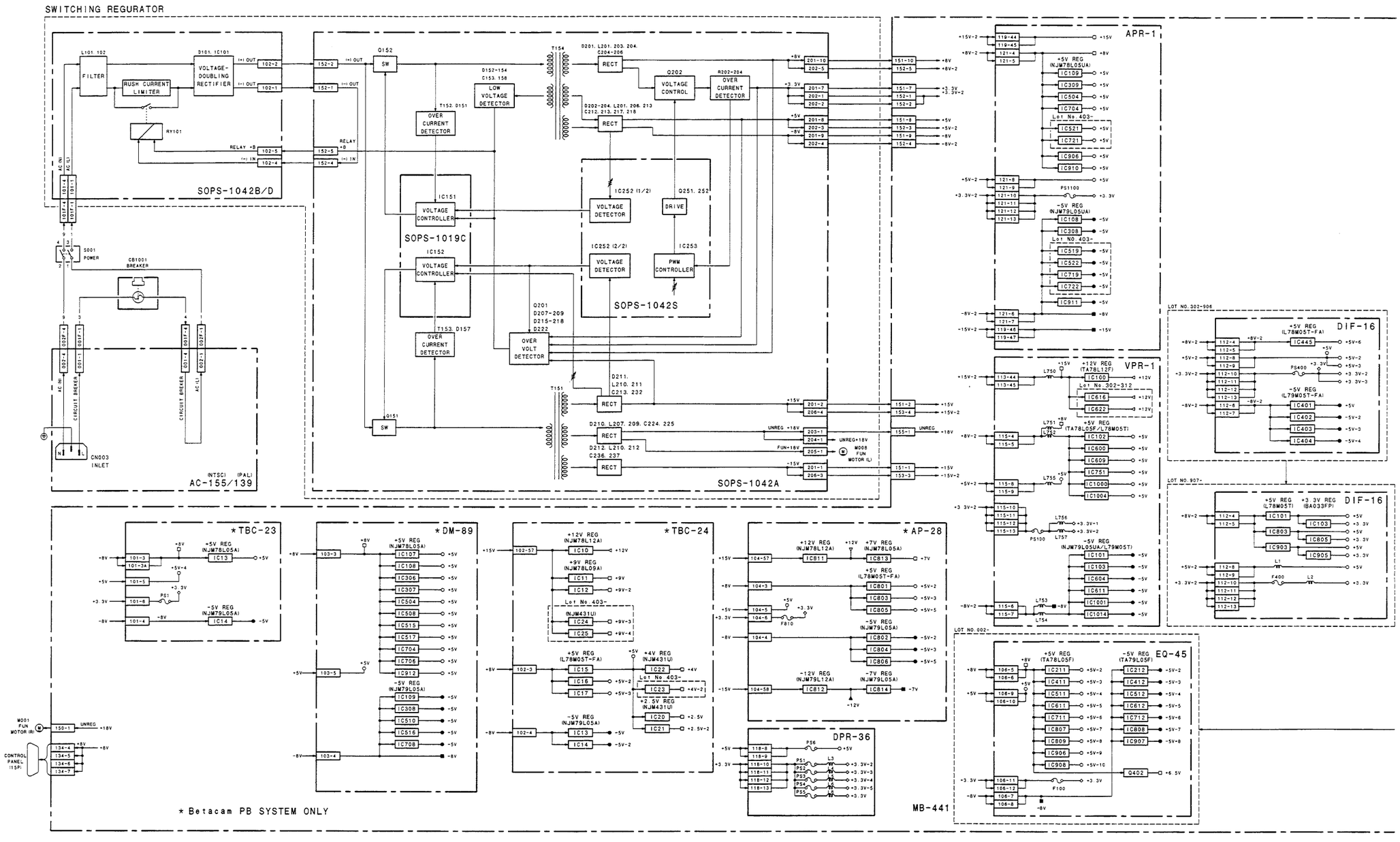
SWITCHING REGURATOR
SOPS-1042B/D
FILTER
RUSH CURRENT LIMITER
VOLTAGE-DOUBLING RECTIFIER
SOPS-1019C
VOLTAGE CONTROLLER
VOLTAGE DETECTOR
OVER CURRENT DETECTOR
LOW VOLTAGE DETECTOR
OVER VOLT DETECTOR
SOPS-1042S
PWM CONTROLLER
DRIVE
VOLTAGE CONTROL
RECT
SOPS-1042A
AC-155/139
(NTSC) (PAL)
CN003 INLET
CIRCUIT BREAKER
S001 POWER
CB1001 BREAKER
APR-1
VPR-1
DIF-16
EQ-45
DPR-36
MB-441
TBC-23
DM-89
TBC-24
AP-28
* Betacam PB SYSTEM ONLY

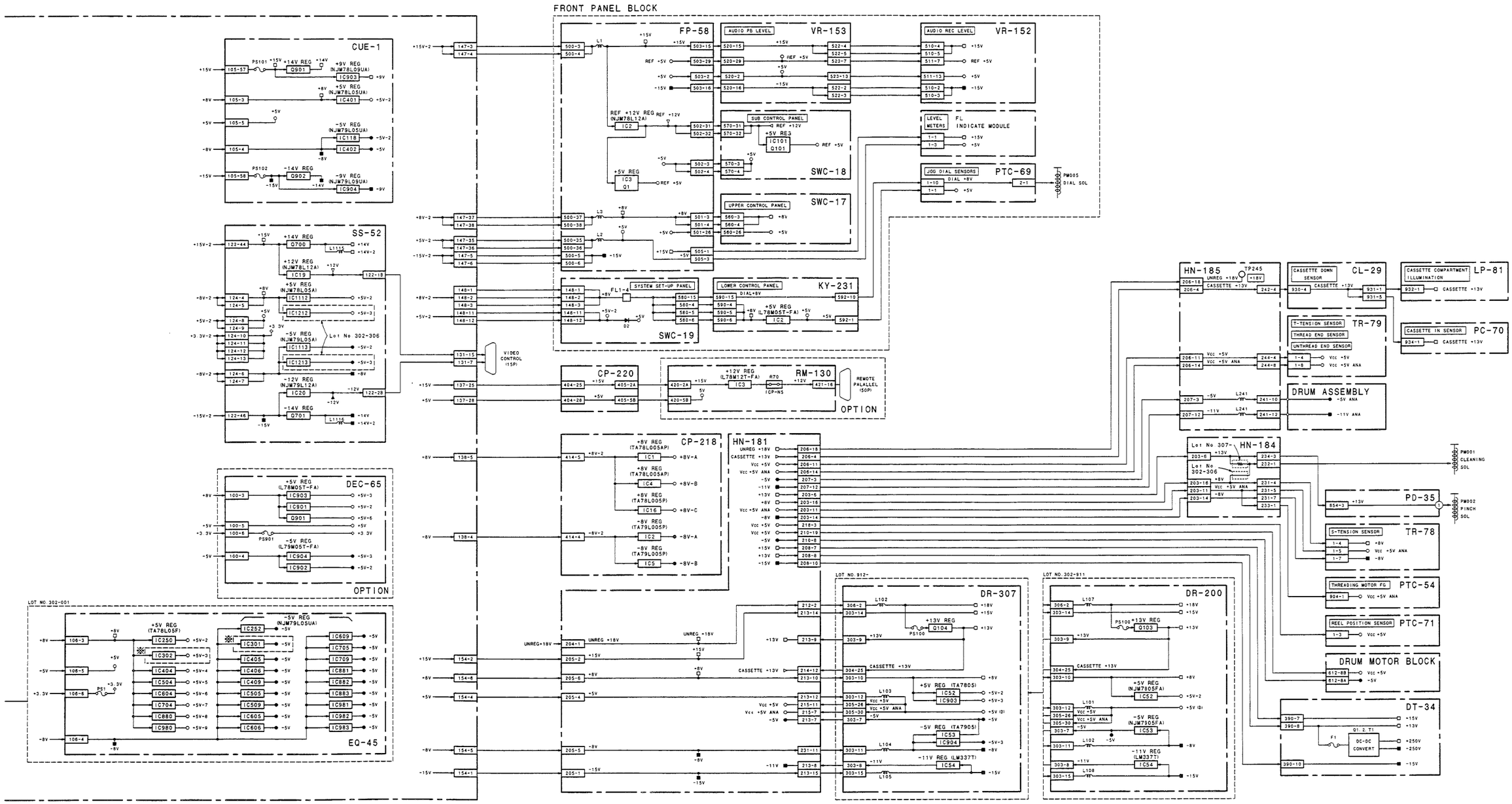

POWER SUPPLY

DVW-A500/500
DVW-A500P/500P

[CIRCUIT DESCRIPTION OF DEC-65 BOARD]

DEC-65 board is an analog composite decoder board that separates the input analog composite video signal into digital Y/C data, converts the signal in the 10-bit parallel video data in which Y, R-Y, B-Y data are multiplexed, and sends it to VPR-1 board.

DEC-65 board is optional and is not provided as a standard feature at the factory.

[BKDW-505] (For NTSC format)
[BKDW-506] (For PAL format)

The circuit on DEC-65 board is designed so that it can be also used for a digital composite input (D2 input) signal. However, it cannot be used for the digital composite input signal as equipment. Therefore, only case for an analog composite input signal is described below.

The process outline is first described.
An analog composite input signal is A/D-converted into digital composite data and sent to a main composite decoder (IC606). IC606 separates the composite data from Y data to chroma data, decodes the chroma data into R-Y and B-Y data, and converts the reference clock from 4Fsc to 13.5 MHz in a rate. IC606 then multiplexes Y, R-Y, and B-Y data and outputs it as 10-bit parallel video data (27-MHz clock based on the D1 format).

The outline of the circuit is described next.
The input analog composite video signal enters through a 6-MHz low-pass filter to IC202. IC202 has clamping and VCA functions. The clamp level is corrected by the clamp error voltage from pin 6 of IC606 that is fed back to pin 6 of IC202. The gain is controlled by the DC voltage applied at pin 2 of IC202.
The input level is controlled by this function. The DC voltage applied at pin 2 of IC202 is selected by switch IC307. The selection is performed using an "MA" signal (H: MANUAL, L: AGC) from pin 3 of IC606. When an AGC is on (IC307 selects pin1), the video level is kept constant by feeding back the sync level data from a sync separator circuit on the basis of the level setting data that is supplied from VPR-1 board via an EVR (IC301)(sync AGC).
When an AGC is off (IC307 selects pin2), the gain of IC202 is controlled by the DC voltage D/A-converted from the "GAIN DATA" using IC305. The "GAIN DATA" (GD 0 to GD 7) is obtained when the "MODE DATA" from VPR-1 board is converted from serial to parallel in IC606, and output from IC606.
The video signal that has been adjusted in level, clamped, and output by IC202 branches into two paths. One is sent through a switch (IC203) to the A/D converter (IC601). The another is sent through a buffer (Q201) to the sync separator circuit.
The switch (IC203) is usually connected to pin 1 so that the video signal passes. When a sync signal is input, IC203 is switched to pin 3 by the control signal generated from a sync separator signal, fetching the wide sync signal generated from a signal that branches via a buffer (IC308).
The reason is that the sync width must be expanded from 2 usec to 4 usec according to the specifications of IC606.
The analog composite video signal whose sync width has been expanded is sent to an A/D converter(IC604) and converted into 10-bit parallel data. The A/D conversion is performed with the 8Fsc frequency generated by a VCO (CP501) as a clock.
The converted data is sent through a digital filter (IC604) and pedestal switcher (IC605) to IC606 (composite decoder) and separated from Y data to chroma data.
In IC606, the phase of the burst signal detected from this data is compared with the phase of the VCO output signal sent to pin 151 as a "CK" pulse, and the phase error voltage is output from pin 16. The Fsc frequency locked to an input signal is obtained when this error voltage is fed back to the VCO.
To suppress that the pedestal level fluctuates by one LSB when it is sampled by IC606 in the later stage, the pedestal switcher integrates the pedestal level and replaces it by the level averaged for every field.

The composite video data that has been input to IC606 (composite decoder) is separated from digital Y data to chroma data.
The chroma data is then decoded into R-Y and B-Y data.
After that, the reference clock is converted from 4Fsc to 13.5 MHz in a rate, and the Y, R-Y, and B-Y data are multiplexed and sent to VPR-1 board as 10-bit parallel video data based on the D1 format. In IC606, the detection of the color frame information from the input signal and the generation of the timing pulses (HD and VD) are also performed. The resultant data and pulses are sent to VPR-1 board.
The Y data is converted from the D2 level setting to the D1 level setting.
IC606 can be also used for the input signal of a nonstandard signal that is not passed through a TBC circuit.
In this case, the phase of an H signal to be expected by calculation is compared with the phase of an H signal obtained from the actual Y signal after rate conversion.
The resultant phase error voltage is output from pin 69 of IC606.
This error voltage is converted into digital error data ("IER 2 to IER 9) using an external A/D converter (IC801) and fed back to IC606 again. The error data fed back to IC606 changes the time-base coefficient in a rate converter and corrects the calculation value. As the result, the jitters in the Y, R-Y, and B-Y signals are absorbed.

BKDW-505 S/N ; 10001 through 10700
BKDW-506 S/N ; 10001 through 10750 (EK)
BKDW-506 S/N ; 10001 through 10020 (UC)

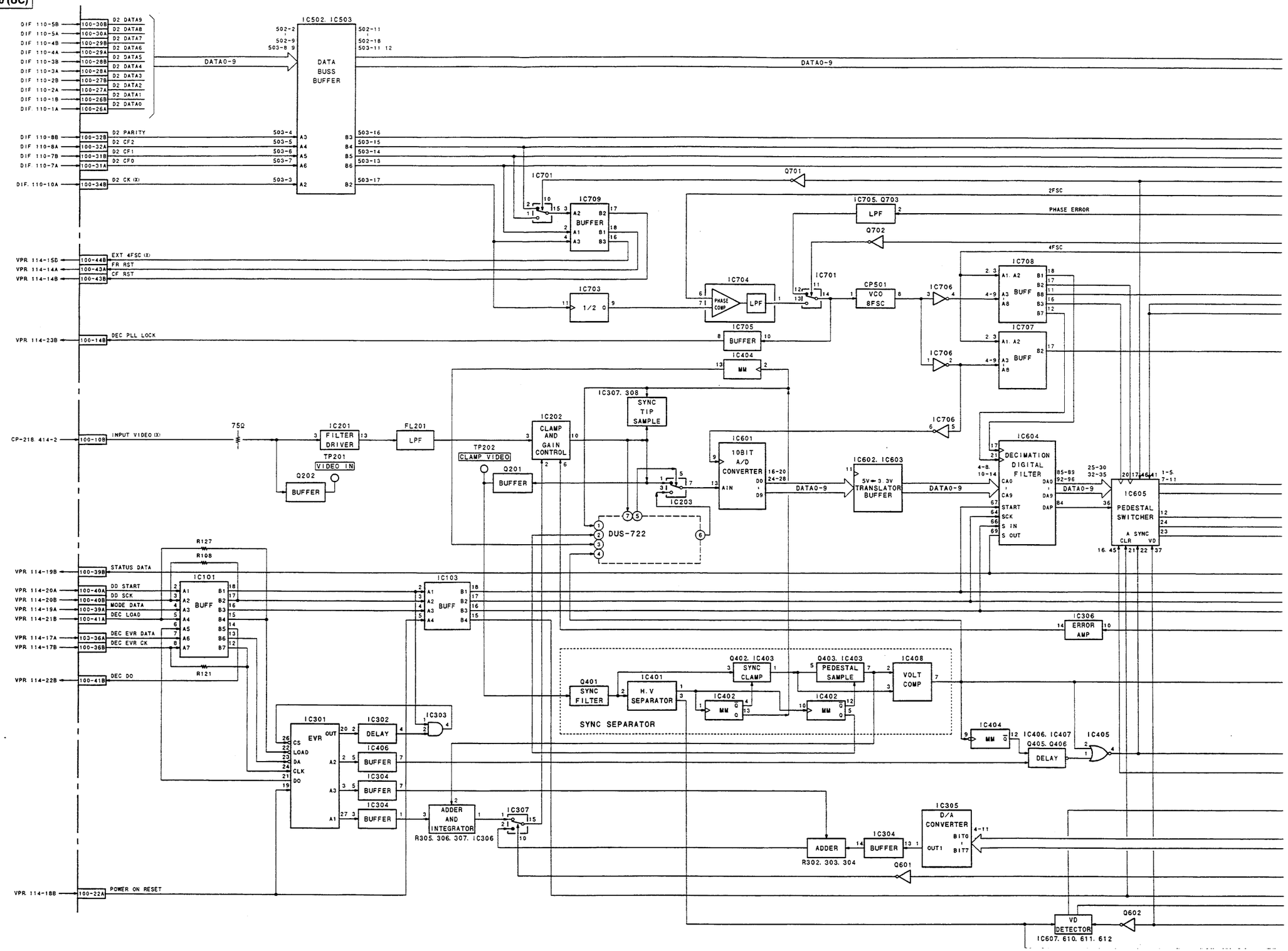

 DEC-65

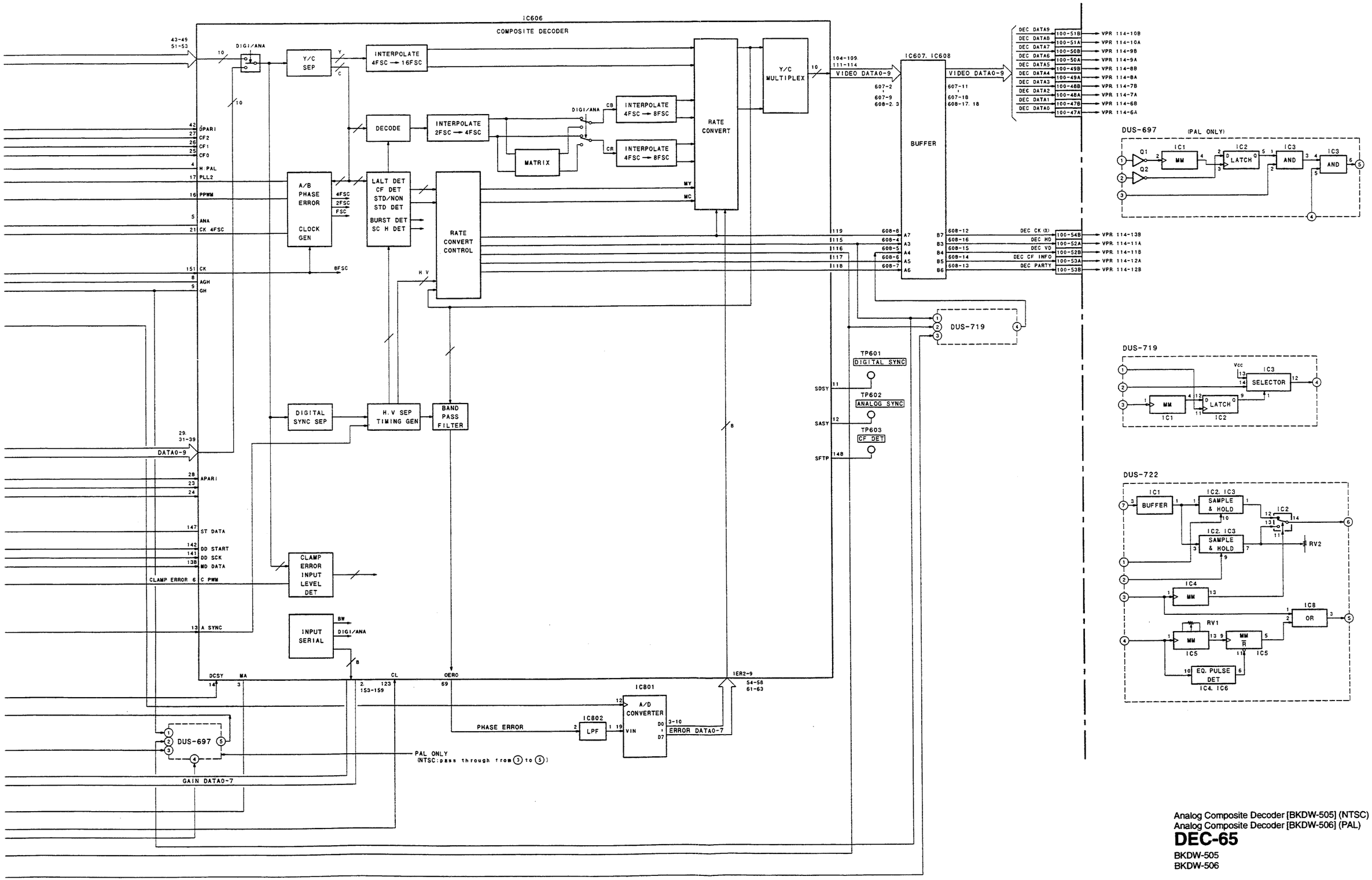

Analog Composite Decoder [BKDW-505] (NTSC)
Analog Composite Decoder [BKDW-506] (PAL)

DEC-65

BKDW-505
BKDW-506

 3-73

BKDW-505 S/N ; 14131 and higher
BKDW-506 S/N ; 12931 and higher (EK)
BKDW-506 S/N ; 10221 and higher (UC)

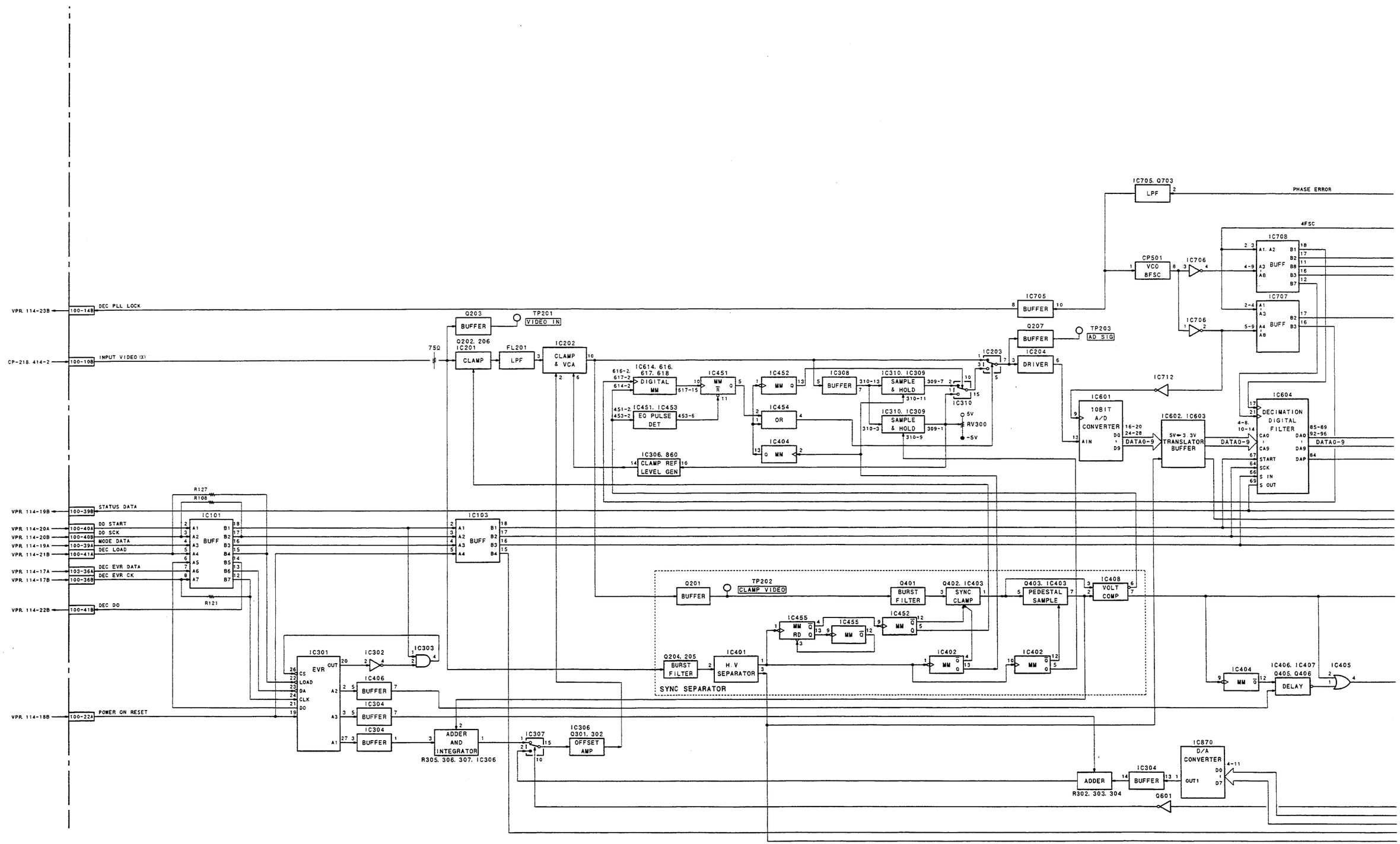

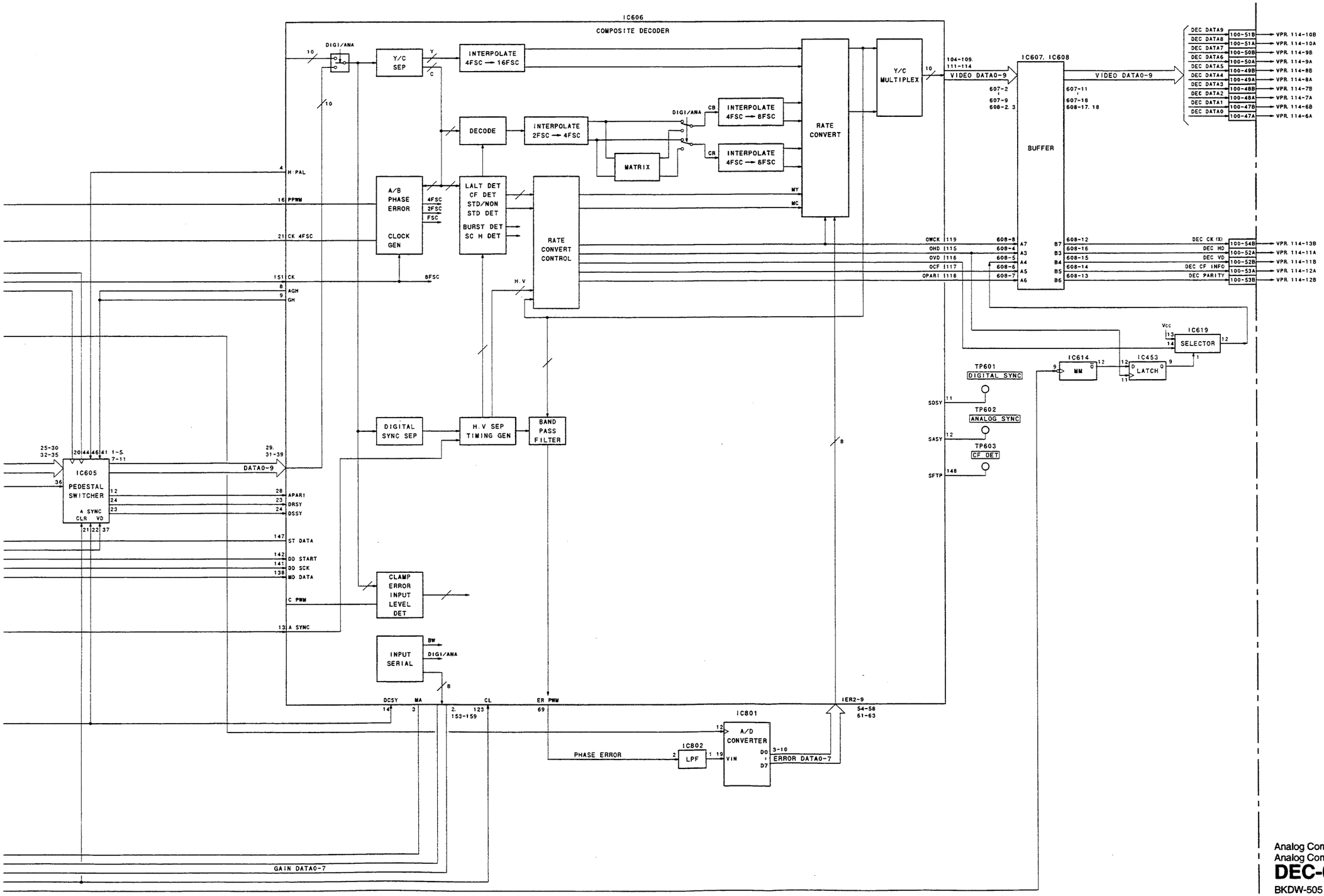

Analog Composite Decoder [BKDW-505] (NTSC)
Analog Composite Decoder [BKDW-506] (PAL)

DEC-65

BKDW-505
BKDW-506

BKDW-505 S/N ; 10701 through 14130
BKDW-506 S/N ; 10751 through 12930 (EK)
BKDW-506 S/N ; 10021 through 10220 (UC)

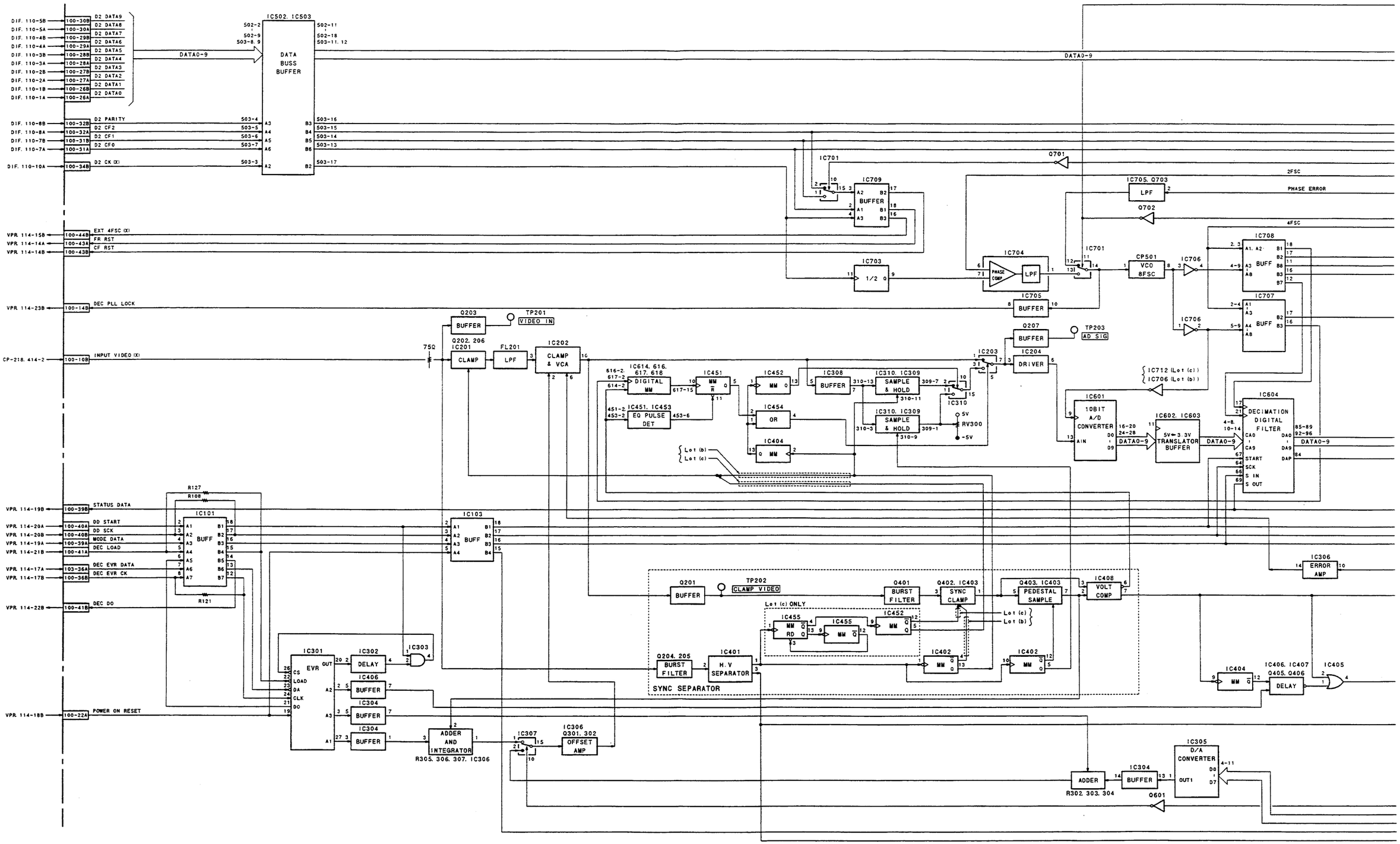

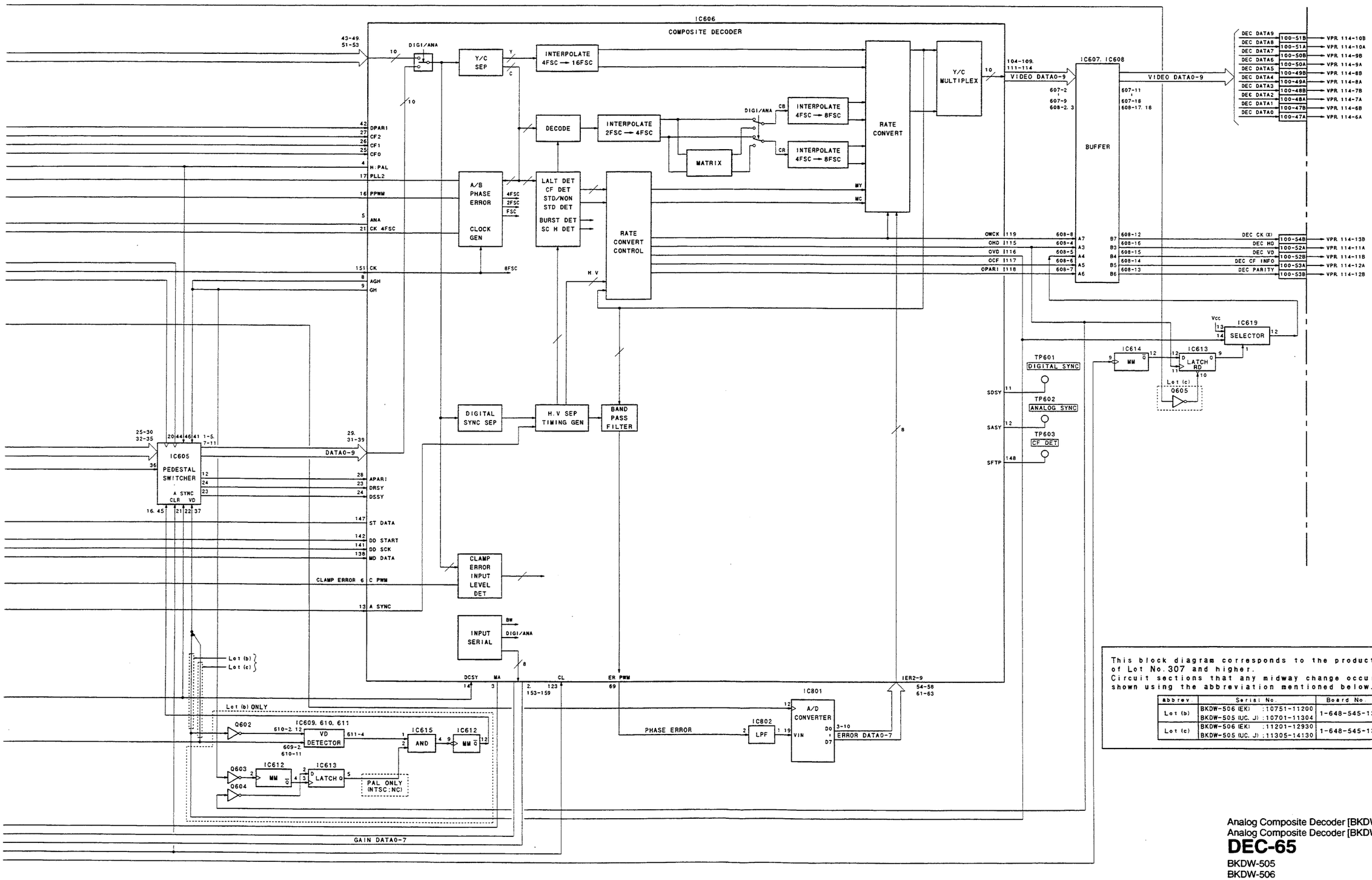

This block diagram corresponds to the production lots of Lot No.307 and higher.
Circuit sections that any midway change occured are shown using the abbreviation mentioned below.

abbrev	Serial No.	Board No.
Lot (b)	BKDW-506 (EK) : 10751-11200 BKDW-505 (UC, J) : 10701-11304	1-648-545-12
Lot (c)	BKDW-506 (EK) : 11201-12930 BKDW-505 (UC, J) : 11305-14130	1-648-545-13

Analog Composite Decoder [BKDW-505] (NTSC)
Analog Composite Decoder [BKDW-506] (PAL)

DEC-65

BKDW-505
BKDW-506

3-3. FRAME

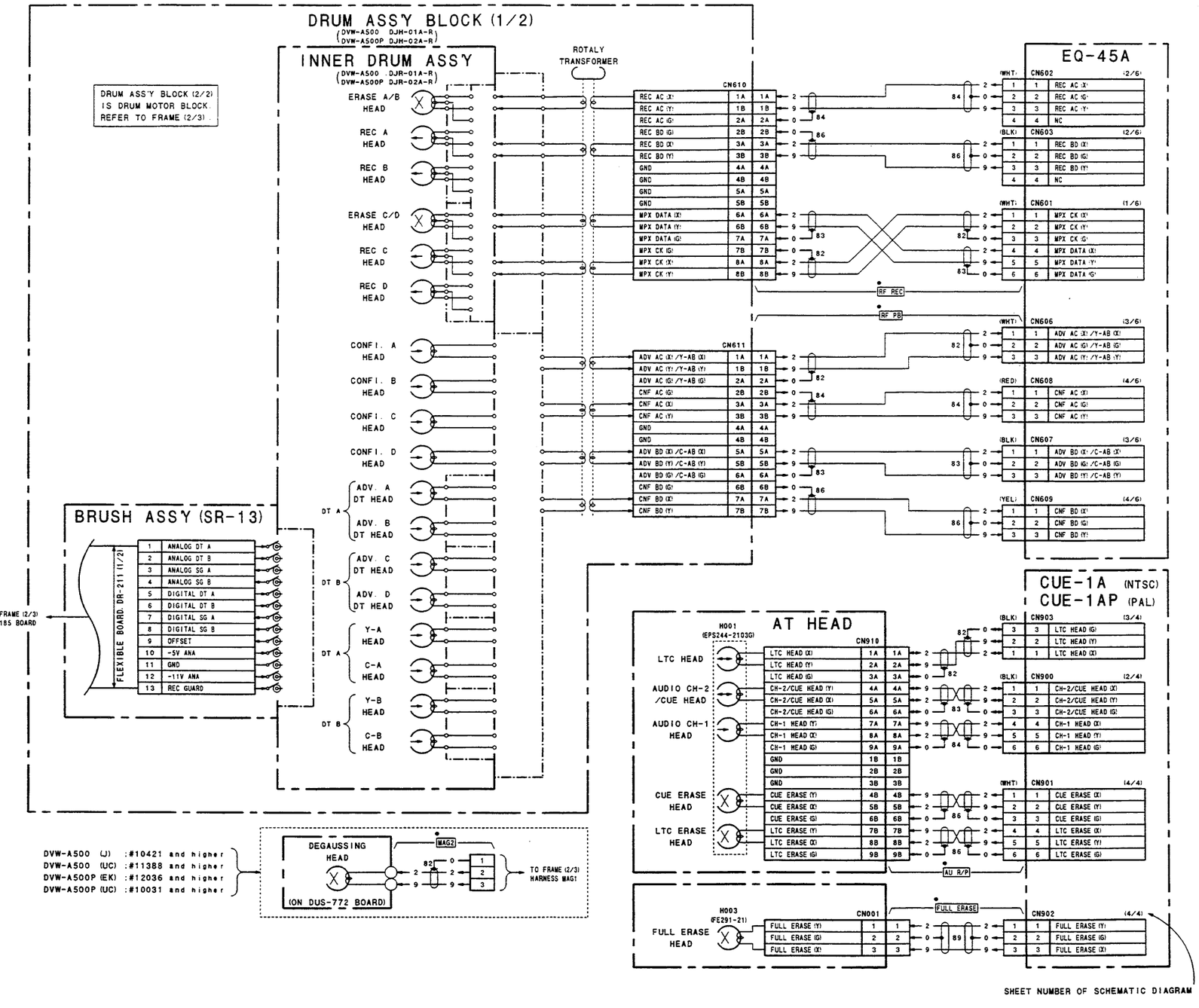

Drum/Heads (Except CTL Head)

FRAME WIRING (1/3)

DVW-A500/A500P

 FRAME (1/3)

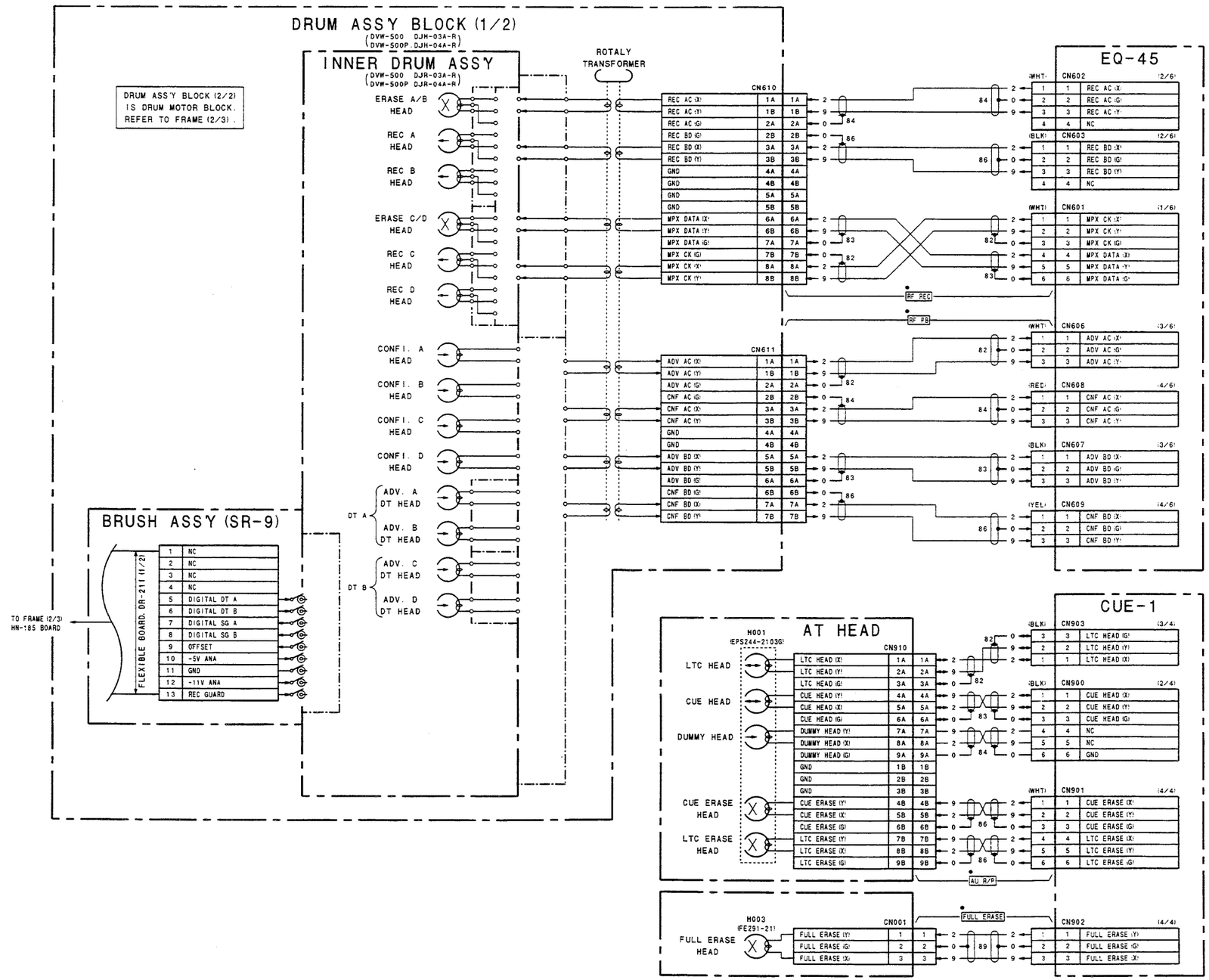

Drum/Heads (Except CTL Head)

FRAME WIRING (1/3)

DVW-500/500P

 3-77

 FRAME (2/3)

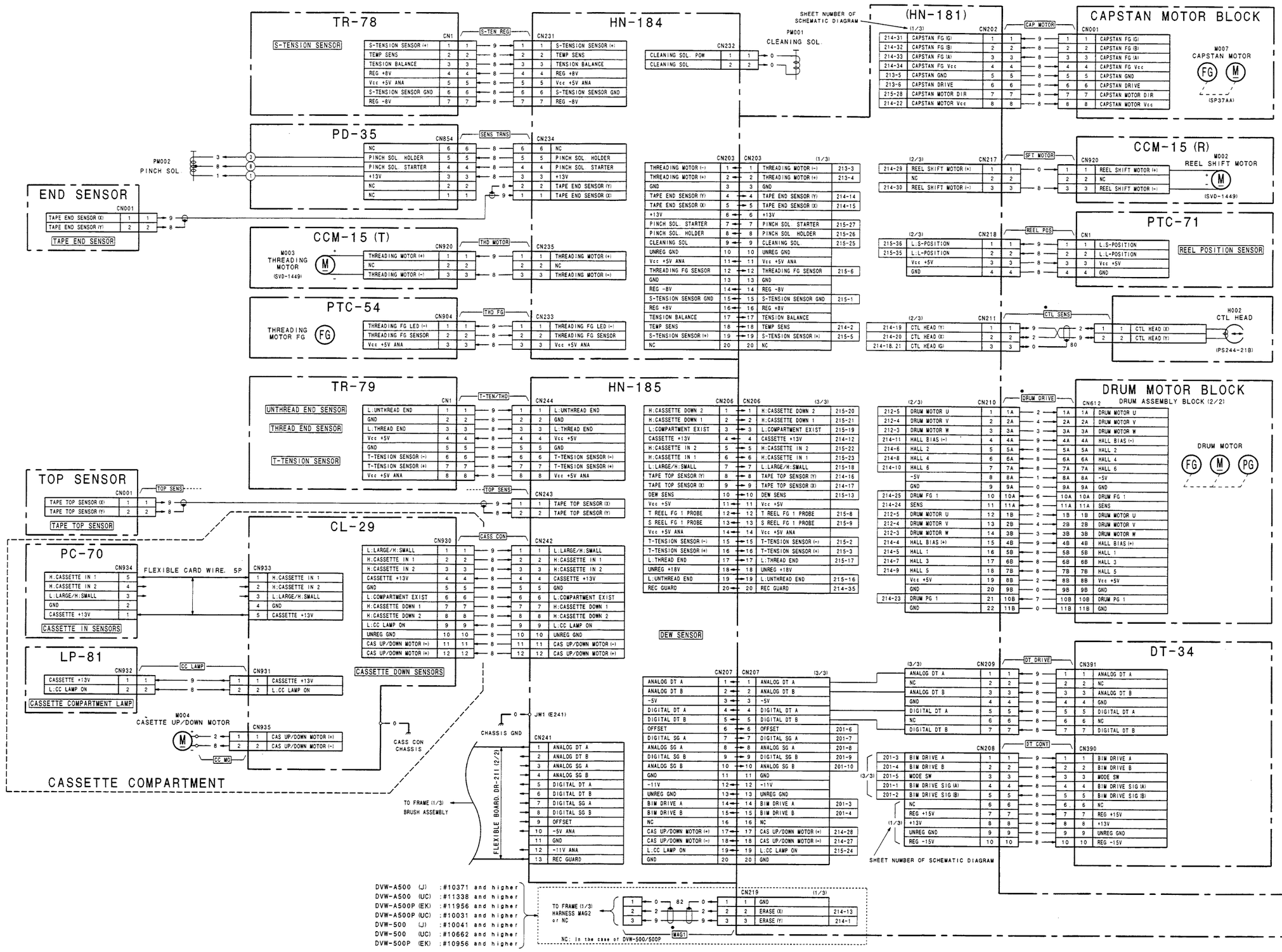
TR-78
S-TENSION SENSOR
HN-184
PD-35
PM002 PINCH SOL.
END SENSOR
TAPE END SENSOR
CCM-15 (T)
M003 THREADING MOTOR (SVD-1449)
PTC-54
THREADING MOTOR FG
TR-79
UNTHREAD END SENSOR
THREAD END SENSOR
T-TENSION SENSOR
HN-185
TOP SENSOR
TAPE TOP SENSOR
PC-70
CASSETTE IN SENSORS
FLEXIBLE CARD WIRE. 5P
CL-29
CASSETTE DOWN SENSORS
LP-81
CASSETTE COMPARTMENT LAMP
M004 CASETTE UP/DOWN MOTOR
CASSETTE COMPARTMENT
CHASSIS GND
CASS CON CHASSIS
JW1 (E241)
FLEXIBLE BOARD. DR-211 (2/2)
TO FRAME (1/3) BRUSH ASSEMBLY
SHEET NUMBER OF SCHEMATIC DIAGRAM
PM001 CLEANING SOL.
DEW SENSOR
(HN-181)
CAPSTAN MOTOR BLOCK
M007 CAPSTAN MOTOR (SP37AA)
CCM-15 (R)
M002 REEL SHIFT MOTOR (SVD-1449)
PTC-71
REEL POSITION SENSOR
H002 CTL HEAD (PS244-21B)
DRUM MOTOR BLOCK
DRUM ASSEMBLY BLOCK (2/2)
DRUM MOTOR
DT-34
TO FRAME (1/3) HARNESS MAG2 or NC
NC: In the case of DVW-500/500P
DVW-A500 (J) :#10371 and higher
DVW-A500 (UC) :#11338 and higher
DVW-A500P (EK) :#11956 and higher
DVW-A500P (UC) :#10031 and higher
DVW-500 (J) :#10041 and higher
DVW-500 (UC) :#10662 and higher
DVW-500P (EK) :#10956 and higher

 3-78

 FRAME (2/3)

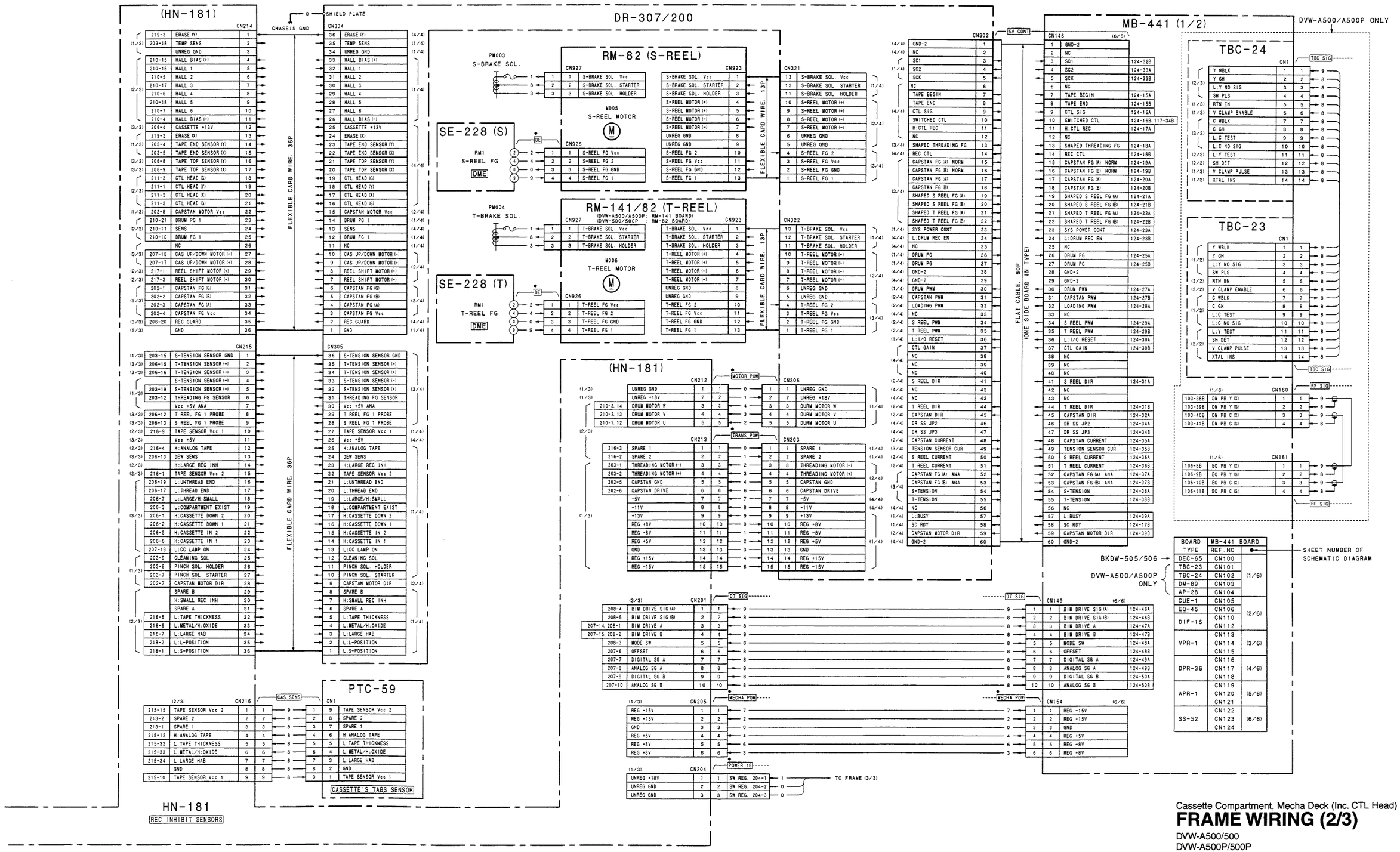

Cassette Compartment, Mecha Deck (Inc. CTL Head)

FRAME WIRING (2/3)

DVW-A500/500
DVW-A500P/500P

 3-79

 FRAME (3/3)

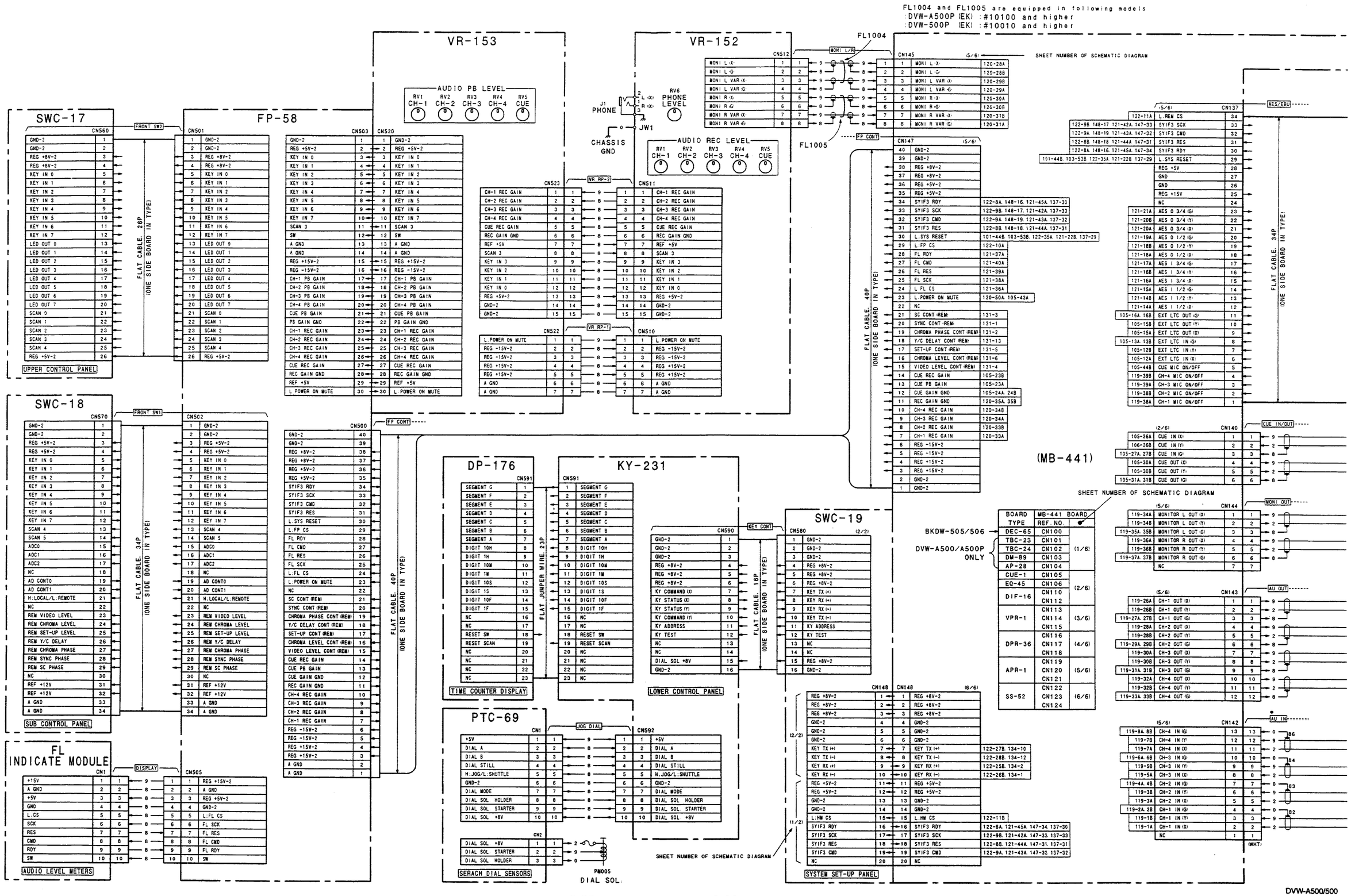
FL1004 and FL1005 are equipped in following models
:DVW-A500P (EK) :#10100 and higher
:DVW-500P (EK) :#10010 and higher
SWC-17
UPPER CONTROL PANEL
FRONT SW2
FLAT CABLE, 26P (ONE SIDE BOARD IN TYPE)
FP-58
VR-153
AUDIO PB LEVEL
RV1 CH-1
RV2 CH-2
RV3 CH-3
RV4 CH-4
RV5 CUE
J1 PHONE
JW1
CHASSIS GND
RV6 PHONE LEVEL
AUDIO REC LEVEL
VR-152
FL1004
FL1005
MONI L/R
FP CONT
SHEET NUMBER OF SCHEMATIC DIAGRAM
FLAT CABLE, 40P (ONE SIDE BOARD IN TYPE)
AES/EBU
FLAT CABLE, 34P (ONE SIDE BOARD IN TYPE)
SWC-18
SUB CONTROL PANEL
FRONT SW1
FLAT CABLE, 34P (ONE SIDE BOARD IN TYPE)
FLAT CABLE, 40P (ONE SIDE BOARD IN TYPE)
FP CONT
DP-176
TIME COUNTER DISPLAY
KY-231
LOWER CONTROL PANEL
FLAT JUMPER WIRE, 23P
KEY CONT
FLAT CABLE, 18P (ONE SIDE BOARD IN TYPE)
SWC-19
SYSTEM SET-UP PANEL
(MB-441)
BKDW-505/506
DVW-A500/A500P ONLY
BOARD TYPE
MB-441 BOARD REF. NO.
DEC-65 CN100
TBC-23 CN101
TBC-24 CN102
DM-89 CN103
AP-28 CN104
CUE-1 CN105
EQ-45 CN106
DIF-16 CN110 CN112
VPR-1 CN113 CN114 CN115
DPR-36 CN116 CN117 CN118
APR-1 CN119 CN120 CN121
SS-52 CN122 CN123 CN124
FL INDICATE MODULE
AUDIO LEVEL METERS
DISPLAY
PTC-69
JOG DIAL
SERACH DIAL SENSORS
PM005
DIAL SOL.
CUE IN/OUT
MONI OUT
AU OUT
AU IN

 3-80

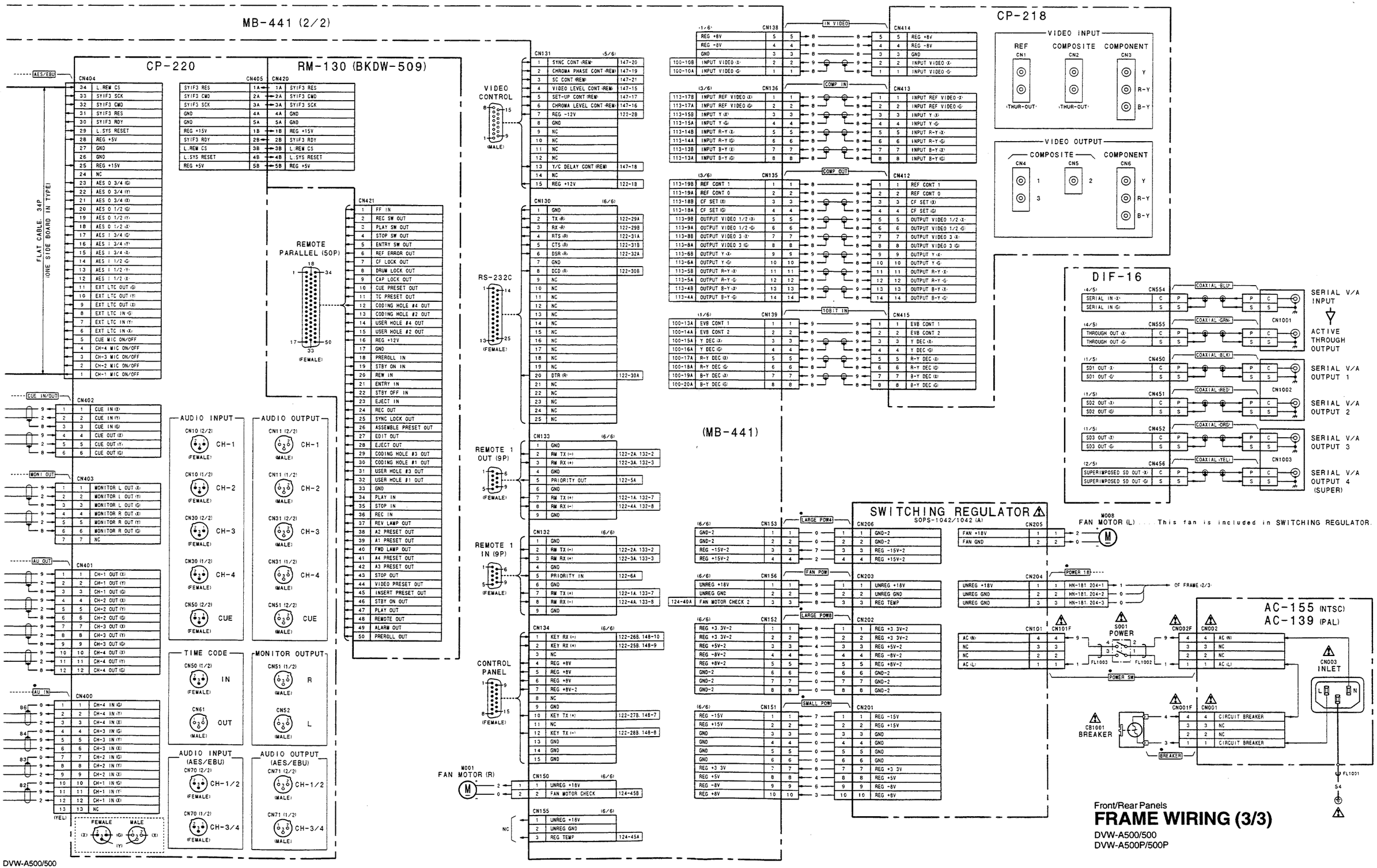

Front/Rear Panels

FRAME WIRING (3/3)

DVW-A500/500
DVW-A500P/500P

SECTION 4
ERROR MESSAGES AND TROUBLESHOOTING

4-1. ERROR MESSAGE

This unit features self-diagnostics.
When trouble is detected, an error code is displayed immediately in the time counter display on the lower control panel, an error code and message are superimposed on the video monitor connected to the VIDEO OUTPUT COMPOSITE 3 connector and the SERIAL V/A OUTPUT 4 connector.
Furthermore, as for the interface error (error code 92, 93, 96 and 98), interface object which error occurred replaced by sub error message on the video monitor.
(To display error code and message on the video monitor, the CHARACTER switch on the system setup panel must be set to ON.)

Time counter display

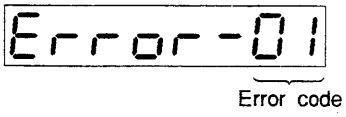

Video monitor display

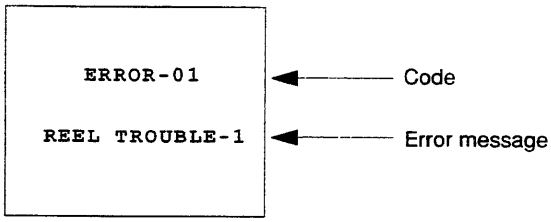

Code	Error message	Description	Detection
01	**REEL TROUBLE-1**	The slack of the tape is detected during threading or unthreading, and then tape protection is done.	Detected when the ratio of the FG frequency at a supply reel, take-up reel and threading motor is less than the specified value.
02	**REEL TROUBLE-2**	The slack or breaking of the tape is detected in search, fast forward, or rewind mode, and then tape protection is done.	Detected when the ratio of the FG frequency at a supply reel and take-up reel is less than the specified value.
03	**REEL TROUBLE-3**	The slack or breaking of the tape is detected in playback mode, or either of the lock of the supply or take-up reel is detected, and then tape protection is done.	Detected when the FG frequency at a supply or take-up reel is zero (0), or when the tension detected from a tension sensor is less than 15 g.
04	**REEL TROUBLE-4**	It is detected that the tape does not run at the speed of designation in fast forward or rewind mode, and then tape protection is done.	Depends on the comparison between the tape speed using the FG frequency at supply and take-up reels and the designated speed.
05	**REEL TROUBLE-5**	It is detected that the supply or take-up reel cannot stop with a cassette is not inserted, or detected that over current has been flowing to supply and take-up reels.	Detected using the FG frequency or current at supply and/or take-up reels.
06	**TAPE TENSION ERROR**	When excessive tension is detected, tape protection is done.	Detected when the tension detected from a tension sensor is more than 55 g.
07	**CAPSTAN TROUBLE**	It is detected that the tape does not run at the speed of designation in play or search mode, and tape protection is done.	Detected at the tape speed detected from the FG frequency at a capstan motor.
08	**DRUM TROUBLE**	It is detected that drum motor rotation is not normal, and then tape protection is done.	Detected when the drum speed obtained from the speed FG of the drum motor is less than the specified value.
09	**TH/UNTH MOTOR TIME OUT**	It is detected that threading or unthreading is not completed, and then tape protection is done.	Detected when threading or unthreading is not completed within ten seconds after it is started.
0A	**THREADING TROUBLE**	It is detected that threading cannot be done, and then tape protection is done.	Detected when the tape top sensor is acted during threading after the short FF mode is automatically entered three times.

(Continue)

(Continued)

Code	Error message	Description	Detection
10	**HUMID**	Condensation is detected.	Detected using a DEW (condensation) sensor.
11	**TAPE TOP/END SENSOR TROUBLE**	The tape top or end sensor operation is defective.	Detected when the tape top and end are detected at the same time.
12	**TAPE TOP SENSOR TROUBLE**	The tape top sensor operation is defective.	Detected when the tape top continues for more than seven seconds.
13	**TAPE END SENSOR TROUBLE**	The tape end sensor operation is defective.	Detected when the tape end continues for more than seven seconds.
14	**FAN MOTOR TROUBLE**	The operation of the fan motor is defective.	Detected according to the period of a ripple noise at the fan motor terminal.
20	**CASSETTE COMPARTMENT MOTOR LOCK**	It is detected that cassette up/down operation is not completed, and then tape protection is done.	Detected when cassette up/down operation is not completed within four seconds after it is started.
21	**REEL SHIFT MOTOR LOCK**	It is detected that driving of the L position to S position or the S position to L position in the reel table is not completed, and then tape protection operation is done.	Detect when reel table driving is not completed within four seconds after it is started.
22	**REEL POSITION SENSOR TROUBLE**	The operation of the L/S position sensor of the reel table is defective.	Detected when the L and S positions are detected at the same time.
90	**KEY BOARD INTERFACE ERROR**	The interface between the KY-231 board and SS-52 board is defective.	Detected when no interface signal is sent from the SS-52 board to the KY-231 board.
91	**1/2 VD NOT EXIST**	No 1/2 VD signal input to SS-52 board is detected.	Detected when no 1/2 VD signal input to the SS-52 board.
92	**INTERNAL INTERFACE ERROR** **sub error message** **FP** **APR** **RM** **SWC** **DPR** **VPR** **TBC** **DM**	The serial or parallele interface between below board and SS-52 board is defective. (DPR-36 board; parallele interface) FP : IC6 of FP-58 board APR : IC51 of APR-1 board RM : IC2 of RM-130 board (BKDW-509) SWC : IC2 of SWC-19 board DPR : DPR-36 board VPR : IC753 of VPR-1 board TBC : IC202 of TBC-23 board (DVW-A500P/A500 only) DM : IC906 of DM-89 board (DVW-A500P/A500 only)	Detected when no interface signal is sent from the each board to the SS-52 board three times continuously.
93	**CPU INITIALIZE ERROR** **sub error message** **DT** **main servo (SV1)** **drum servo (SV2)**	The interface between below CPU on SS-52 board and main CPU (of IC5 on SS-52 board) is defective when the POWER switch is turned ON. DT : IC2104 main servo (SV1) : IC750 drum servo (SV2) : IC700	Detected when no interface signal is sent from the each CPU to the main CPU at the POWER switch is turned ON.
94	**CPU INITIALIZE ERROR 2**	The operational defect of main CPU (of IC5 on SS-52 board) is defective when the POWER switch is turned ON. (Not display on the video monitor)	Detected when no interface signal is sent from the main CPU to the sub CPU (of IC50 on SS-52 board) at the POWER switch is turned ON.

(Continue)

(Continued)

Code	Error message	Description	Detection
96	**NV-RAM TROUBLE** **sub error message** **menu-1** **menu-2** **menu-3**	The operational defect of the NV-RAM (setup menu data) on the SWC-19 board or SS-52 board is detected. Then, reset the data in the NV-RAM to the condition at exfactory for menu-1, 2, 3, and id code.	
		menu-1 : IC13 of SS-52 board*2 menu-2 : IC13 of SS-52 board*2 menu-3 : IC13 of SS-52 board*2	Detected by the NV-RAM data's checksum.
	id code	id code : IC3, 4, 5 of SWC-19 board	Detected when the ID codes of three NV-RAMs are not equal.
	SWC-1 **SWC-2** **SWC-3** **SWC-4**	SWC-1 : IC3 of SWC-19 board SWC-2 : IC4 of SWC-19 board SWC-3 : IC5 of SWC-19 board SWC-4 : IC6 of SWC-19 board	Detected when no interface signal is sent from the each NV-RAM to IC2 on the SWC-19 board.
97	**SV NV-RAM TROUBLE**	The operational defect of the NV-RAM (servo adjustment data) on the DR-307/200 board is detected.	Detected by the NV-RAM data's checksum.
98*1	**NV-RAM TROUBLE** **sub error message** **RF ADJUST DATA LOST** **REMOTE-2 DATA RESET**	The operational defect of the NV-RAM (IC6) (RF adjustment data or REMOTE-2 setup data) on the SWC-19 board is detected. Then, reset the data in the NV-RAM to the condition at exfactory.	Detected by the NV-RAM data's checksum.

*1 ; This error code is applied to the unit in which the version numbers of both SYS1 ROM (IC12) and SYS2 ROM (IC54) on the SS-52 board are 3.10 or higher.

*2 ; This description is applied to the unit in which the version numbers of both SYS1 ROM (IC12) and SYS2 ROM (IC54) on the SS-52 board are 3.10 or higher.
For the inapplicable unit, are as follows:
menu-1 : IC3 of SWC-19 board
menu-2 : IC4 of SWC-19 board
menu-3 : IC5 of SWC-19 board

SECTION 5
MAINTENANCE MODE

5-1. OUTLINE

The DVW-A500P/500P/A500/500 has the maintenance mode required for maintenance and troubleshooting. The maintenance mode is as described below.
Each mode consists of some menus and submenus.
(For the menu tree, refer to page 5-4.)

C0: SERVO/DT CHECK
C1: RF CHECK
C2: AUDIO/VIDEO CHECK
C3: BETACAM PB CHECK (DVW-A500P/A500 only)
C4: OTHERS CHECK
A0: SERVO/DT ADJUST
A1: RF ADJUST
A2: AUDIO/VIDEO ADJUST
A3: BETACAM PB ADJUST (DVW-A500P/A500 only)

The contents of the maintenance mode are superimposed on the video monitor that is connected to the VIDEO OUTPUT COMPOSITE 3 connector and SERIAL V/A OUTPUT 4 connector.
The figure below shows an example of the screen display.

```
MAINTENANCE MODE

*C0 :  SERVO/DT     CHECK
 C1 :     RF        CHECK
 C2 : AUDIO/VIDEO   CHECK
 C3 : BETACAM PB    CHECK
 C4 :   OTHERS      CHECK
 A0 :  SERVO/DT    ADJUST
 A1 :     RF       ADJUST
 A2 : AUDIO/VIDEO  ADJUST
 A3 : BETACAM PB   ADJUST
```

DVW-A500P/A500

```
MAINTENANCE MODE

*C0 :  SERVO/DT     CHECK
 C1 :     RF        CHECK
 C2 : AUDIO/VIDEO   CHECK
 C4 :   OTHERS      CHECK
 A0 :  SERVO/DT    ADJUST
 A1 :     RF       ADJUST
 A2 : AUDIO/VIDEO  ADJUST
```

DVW-500P/500

Superimposed Screen (Mode Screen when Maintenance Mode is Activated)

Notes on operation of the control panel BKDW-515

When using the maintenance mode from the control panel BKDW-515, please read some words in this section as follows.

SET button → F8 (SELECT) key
MENU button → F10 (EXIT) key
KY → CP

The buttons etc. related to the maintenance mode are as follows:

① **Time counter (Lower control panel)**
The menu number is displayed in the blinking/lighting state during menu assignment.
For the manual adjustment, data is displayed in the blinking state.
Be sure to use a video monitor because the information that can be displayed on the time counter is restricted in the maintenance mode.

② **MENU button (Lower control panel)**
In the maintenance mode, the MENU button has the same function as switch ⑨ S301 on the SS board.

③ **SET button (Lower control panel)**
In the maintenance mode, the SET button has the same function as switch ⑧ S300 on the SS board.
With DIP switch ⑩ S100-7 on the SS board set to ON (upper position), the maintenance mode is entered when this button is pressed while pressing the ④ CTL button in the setup menu mode.

④ **CTL button (Lower control panel)**
With DIP switch ⑩ S100-7 on the SS board set to ON (upper position), the maintenance mode is entered when the ③ SET button is pressed while pressing this button in the setup menu mode.

⑤ **SHUTTLE button (Lower control panel)**
When the ⑦ search dial is turned while pressing this button during manual adjustment, the adjustment data can be changed.

⑥ **JOG button (Lower control panel)**
The JOG lamp lights when this button is pressed once. The ⑦ search dial is then set to the JOG mode.
When the ⑦ search dial is turned while pressing this button during manual adjustment, the adjustment data can be changed.

⑦ **Search dial (Lower control panel)**
The search dial selects each menu in the JOG mode.
To change the adjustment data during manual adjustment, turn this search dial while pressing the ⑥ JOG button or ⑤ SHUTTLE button.
The SHUTTLE and JOG modes are alternately selected every time this dial is pressed. The lamp (SHUTTLE or JOG) indicating the corresponding mode then lights.

⑧ **S300 (SS board): DIAG/ADJUST 1 switch (ADJ +)**
Press this switch to activate the maintenance mode.
In the maintenance mode, press this switch to execute the menu or submenu selected by the ⑦ search dial.
In the maintenance mode, the ③ SET button is also the same in function as this switch.

⑨ **S301 (SS board): DIAG/ADJUST 2 switch (ADJ −)**
In the maintenance mode, press this switch to return to the preceding screen.
To exit the maintenance mode, press this switch when the mode screen is displayed.
In the maintenance mode, the ② MENU button is also the same in function as this switch.

⑩ **S100-7 (SS board): MAINTENANCE MODE ACCESS ENABLE switch**
To enter the maintenance mode by the button operation on the front panel, set this switch to ON (upper position) in advance.

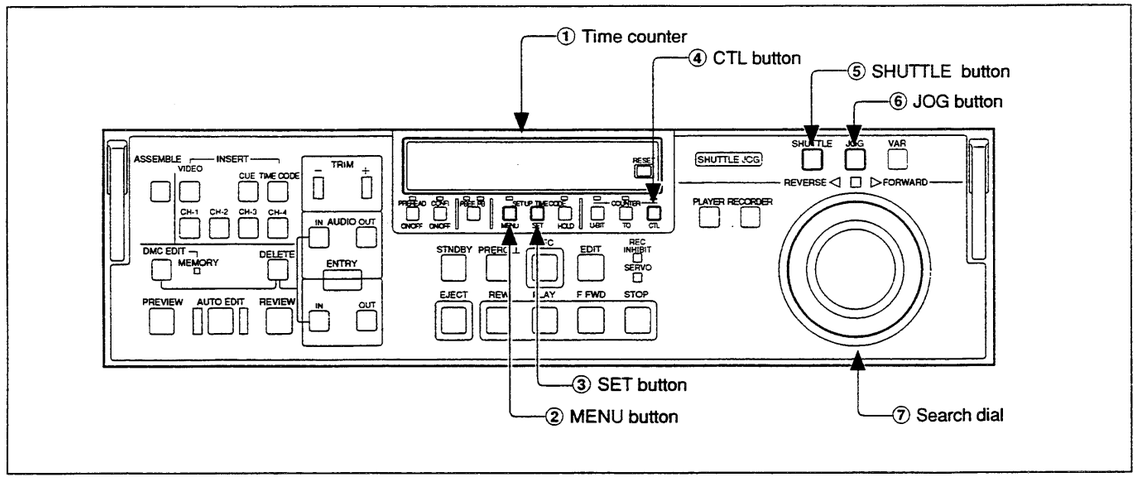

Lower Control Panel

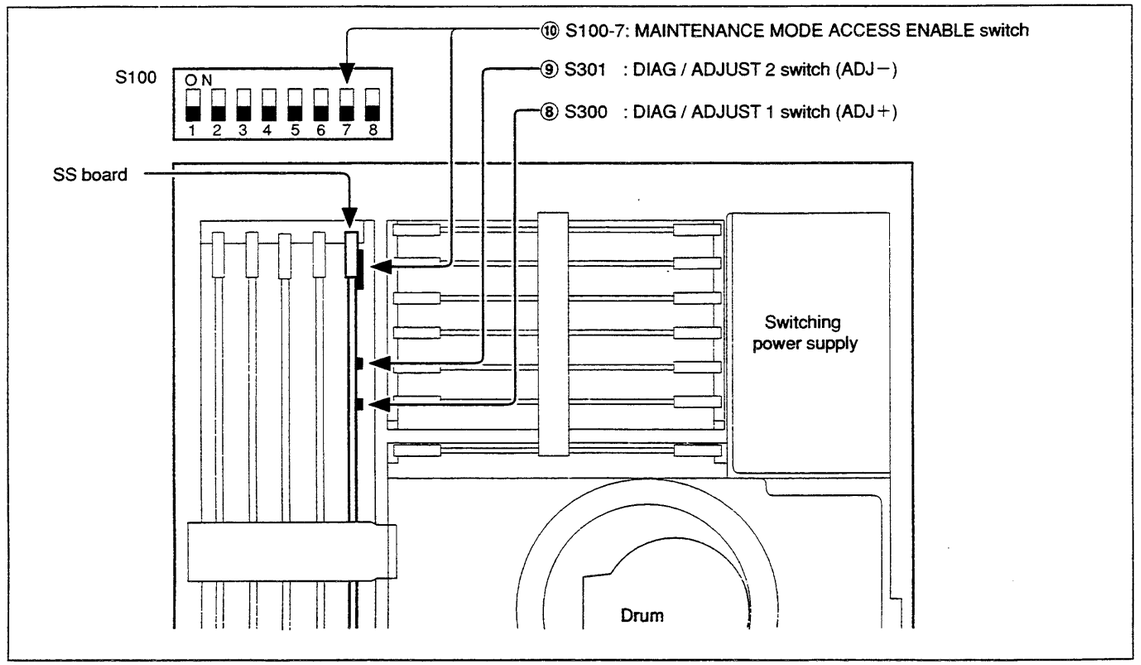

Switch Position on SS Board

Activating the maintenance mode

(1) Confirm that the video monitor is connected to the VIDEO OUTPUT COMPOSITE 3 connector or SERIAL V/A OUTPUT 4 connector.

(2) Press the ⑧ S300 (SS board).

(3) The mode screen in the maintenance mode is displayed on the monitor screen.

Terminating the maintenance mode

(1) Press the ② MENU button or ⑨ S301 (SS board) several times to display the mode screen.

(2) Press the ② MENU button or ⑨ S301 (SS board) again when the mode screen is displayed. The maintenance mode is then exited.

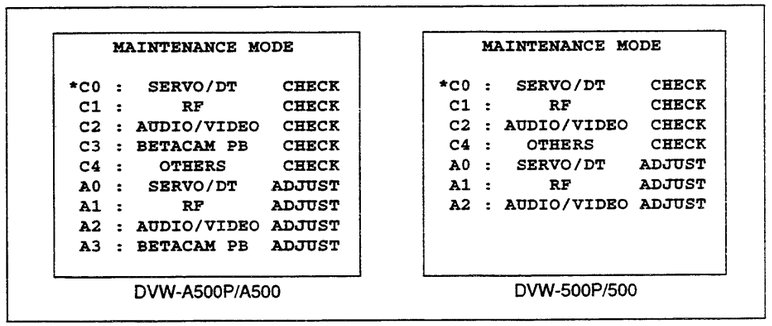

Mode Screen

Activating the maintenance mode on lower control panel

When the ⑩ S100-7 (SS board) is set to ON (upper position), the maintenance mode can be activated by the operation mentioned below.

BKDW-514

(1) Press the ② MENU button once.
(The mode then changes from operation mode to setup menu mode.)

(2) Press the ③ SET button while pressing the ④ CTL button.
(The mode then changes from setup menu mode to maintenance mode.)

(3) The mode screen in the maintenance mode is displayed on the monitor screen.

BKDW-515

(1) Press the MAINTENANCE button while pressing the SFT key.
(The mode then changes from operation mode to maintenance mode for the control panel.)

(2) Press the F6 (VTR MAINT) key.
(The mode then changes to VTR maintenance menu.)

(3) The mode screen in the maintenance mode is displayed on the monitor screen.

5-1. OUTLINE

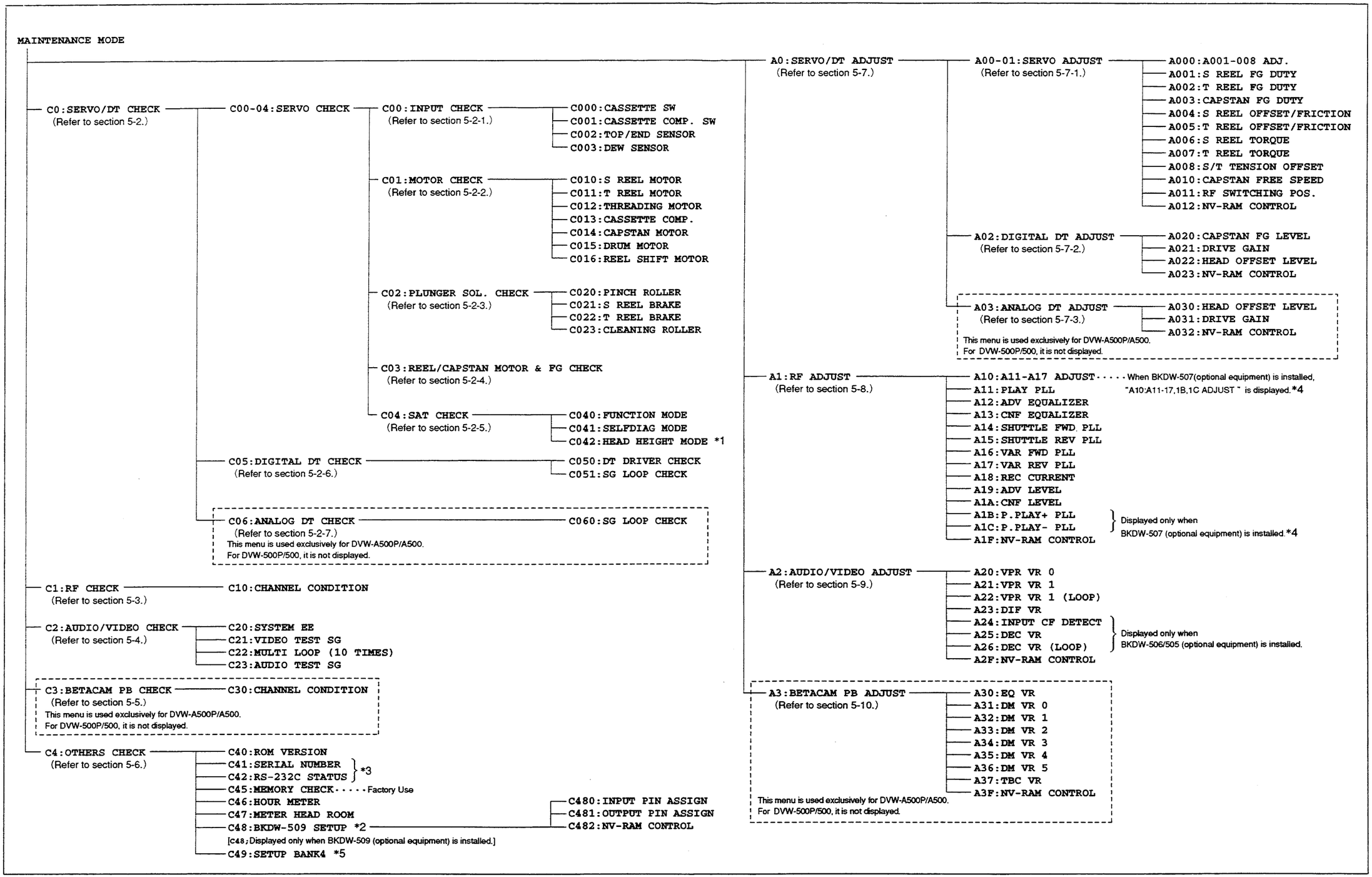

Menu Tree

*1: This mode is applied to the unit in which the SV1 ROM (IC761 on the SS board) version is 1.20 or higher.
*2: This mode is applied to the unit in which the version numbers of both SYS1 ROM (IC12) and SYS2 ROM (IC54) on the SS board are 1.10 or higher.
*3: These modes are applied to the unit in which the three version numbers of SYS1 ROM (IC12), SV1 ROM (IC761), and DT ROM (IC211/IC2110) on the SS board are 2.00 or higher.
*4: The A1B and A1C modes are applied on the unit in which the two version numbers of SYS1 ROM (IC12) and SV1 ROM (IC761) are 2.10 or higher.
*5: This mode is applied to the unit in which the version numbers of both SYS1 ROM (IC12) and SYS2 ROM (IC54) on the SS board are 3.10 or higher.

5-2. SERVO/DT SYSTEM CHECK MODE

5-2. SERVO/DT SYSTEM CHECK MODE (C0: SERVO/DT CHECK)

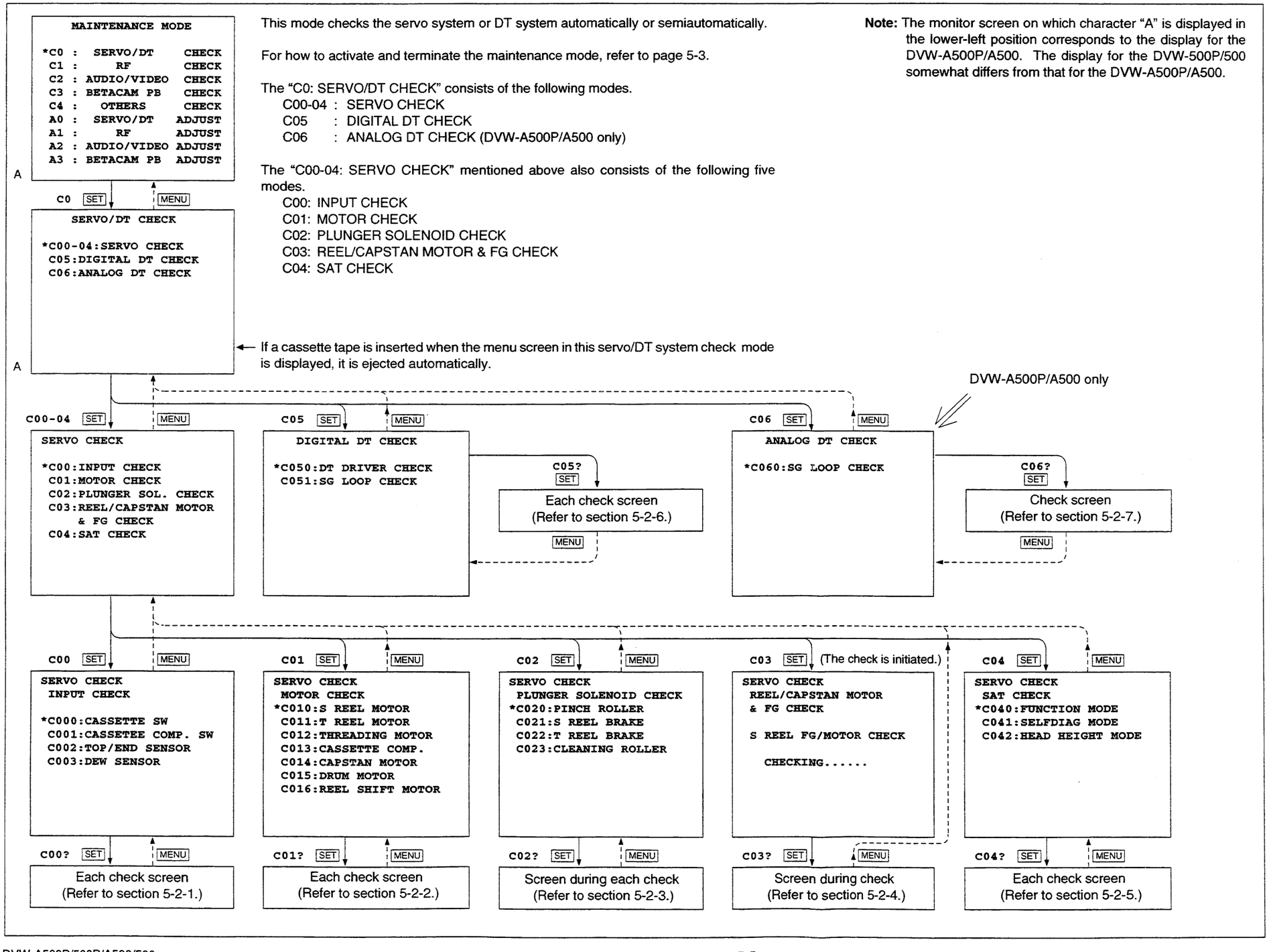

This mode checks the servo system or DT system automatically or semiautomatically.

For how to activate and terminate the maintenance mode, refer to page 5-3.

The "C0: SERVO/DT CHECK" consists of the following modes.

- C00-04 : SERVO CHECK
- C05 : DIGITAL DT CHECK
- C06 : ANALOG DT CHECK (DVW-A500P/A500 only)

The "C00-04: SERVO CHECK" mentioned above also consists of the following five modes.

- C00: INPUT CHECK
- C01: MOTOR CHECK
- C02: PLUNGER SOLENOID CHECK
- C03: REEL/CAPSTAN MOTOR & FG CHECK
- C04: SAT CHECK

Note: The monitor screen on which character "A" is displayed in the lower-left position corresponds to the display for the DVW-500P/500 somewhat differs from that for the DVW-A500P/A500.

"C042 : HEAD HEIGHT MODE" is applied to unit in which the SV1 ROM (IC 761 on the SS board) version is 1.20 or higher.

5-2-1. Servo System Check 1 (C00: INPUT CHECK)

This section describes the "C00: INPUT CHECK" mode.

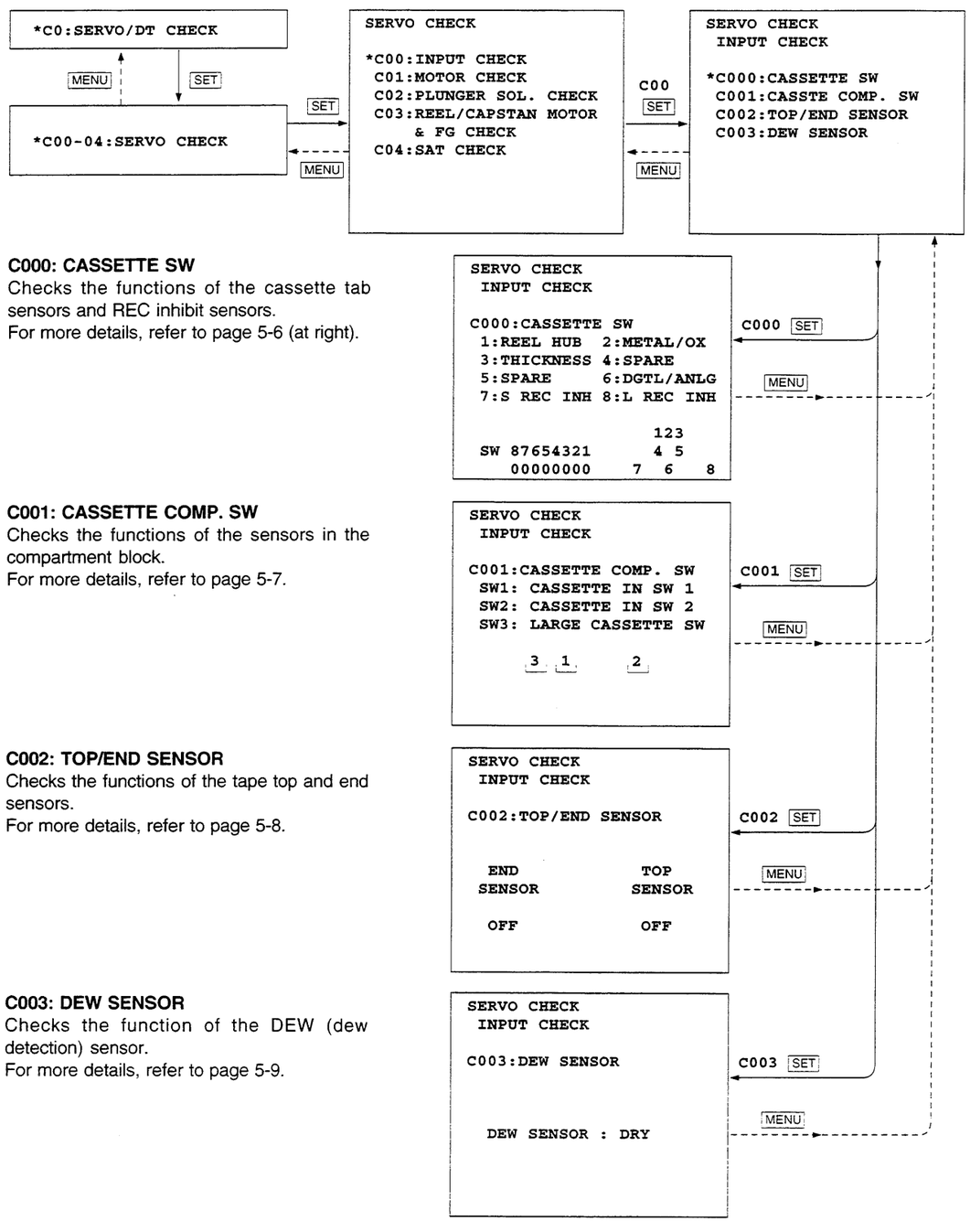

C000: CASSETTE SW
Checks the functions of the cassette tab sensors and REC inhibit sensors.
For more details, refer to page 5-6 (at right).

C001: CASSETTE COMP. SW
Checks the functions of the sensors in the compartment block.
For more details, refer to page 5-7.

C002: TOP/END SENSOR
Checks the functions of the tape top and end sensors.
For more details, refer to page 5-8.

C003: DEW SENSOR
Checks the function of the DEW (dew detection) sensor.
For more details, refer to page 5-9.

a) C000: CASSETTE SW

This mode checks the functions of the cassette tab sensors and REC inhibit sensors (switches).

```
SERVO CHECK
 INPUT CHECK

C000:CASSETTE SW
 1:REEL HUB   2:METAL/OX
 3:THICKNESS  4:SPARE
 5:SPARE      6:DGTL/ANLG
 7:S REC INH  8:L REC INH

                  123
 SW 87654321      4 5
    00000000    7  6   8
```

Confirm that lowest digit "0" of the corresponding switch number on the monitor screen changes to "1" when switches/sensors ① through ⑧ in the figure below are pressed manually. Also confirm that the lowest digit returns from "1" to "0" when they are released.

In case of NG;
When "1" is not displayed in the specified position or when the display does not return from "1" to "0".
The cassette tab sensors (① through ⑥) are NG.
Check the corresponding sensors on the PTC-59 board.
Also check the sensor input circuit on the DR-307/200 board.
The REC inhibit sensors (⑦ and ⑧) are NG.
Check the corresponding sensors on the HN-181 board.
Also check the sensor input circuit on the DR-307/200 board.

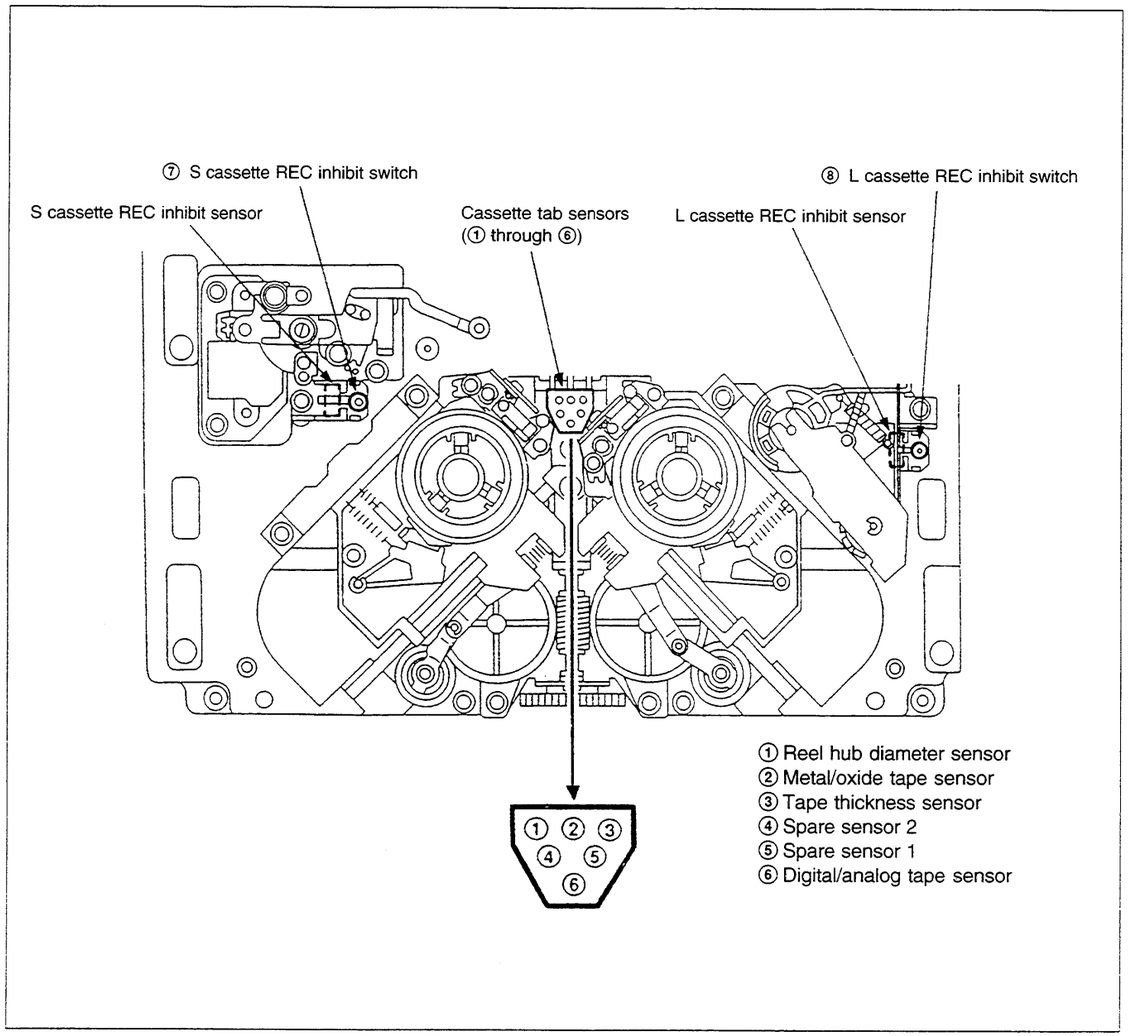

b) C001: CASSETTE COMP. SW

This mode checks the functions of the sensors (switches) in the compartment block.

```
SERVO CHECK
 INPUT CHECK

C001:CASSETTE COMP. SW
 SW1: CASSETTE IN SW 1
 SW2: CASSETTE IN SW 2
 SW3: LARGE CASSETTE SW

      3  1      2
```

Confirm that the corresponding switch number on the monitor screen changes to "■" when switches SW1 through SW3 in the figure below are pressed manually. Also confirm that "■" changes to the corresponding number when they are released.

In case of NG;

When "■" is not displayed in the specified position or when the display does not return from "■" to the corresponding number.

Check the corresponding sensors on the PC-70 board.

Also check the sensor input circuit on the DR-307/200 board.

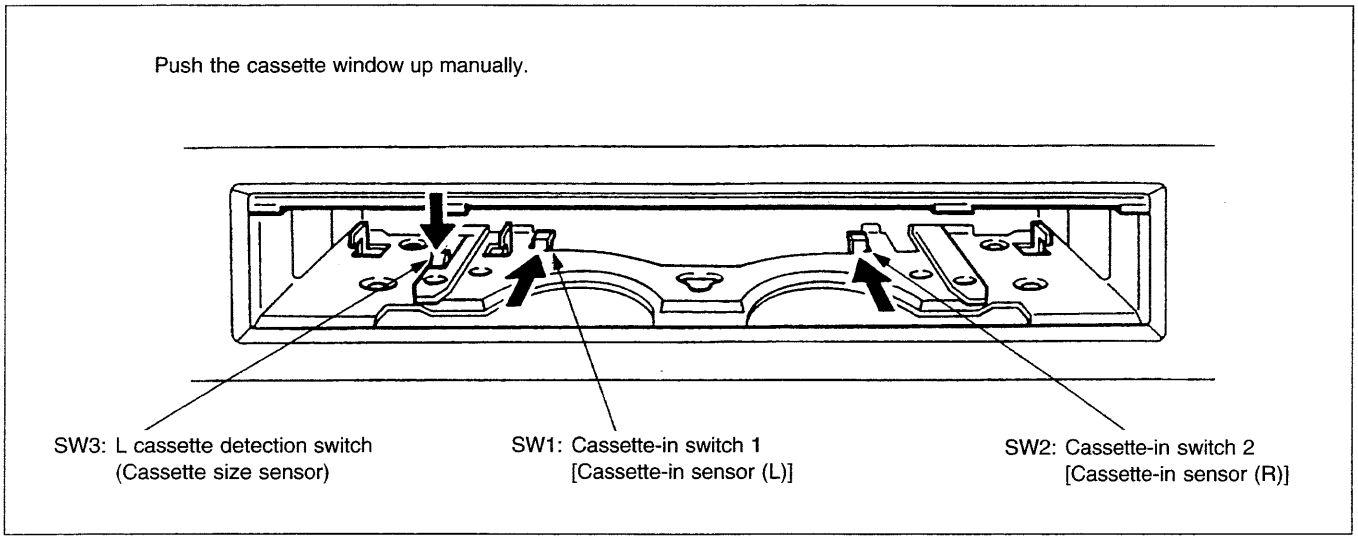

Switch Position in Compartment Block

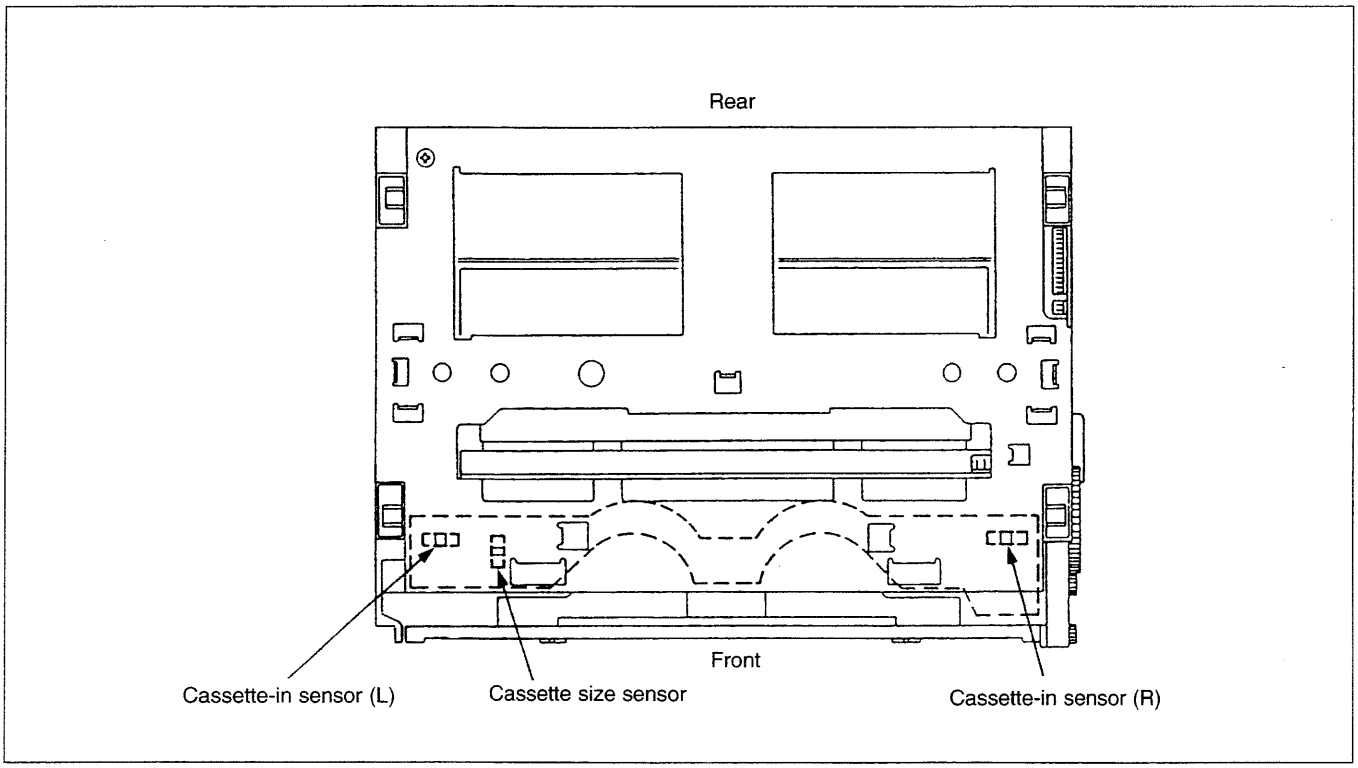

Top View of the Cassette Compartment

c) C002: TOP/END SENSOR

This mode checks the function of the tape top and end sensors.

Confirm that the "OFF" display on the monitor screen changes to "ON !" when a screwdriver is brought near sensors ① and ② in the figure below. Also confirm that the display changes from "ON !" to "OFF" when the screwdriver is released from the sensors.

```
SERVO CHECK
 INPUT CHECK

C002:TOP/END SENSOR


 END            TOP
SENSOR         SENSOR

 OFF            OFF
```

In case of NG;

When "ON !" is not displayed in the specified position or when the display does not return from "ON !" to "OFF" .

Check only the sensors.

Also check the sensor input circuit on the DR-307/200 board.

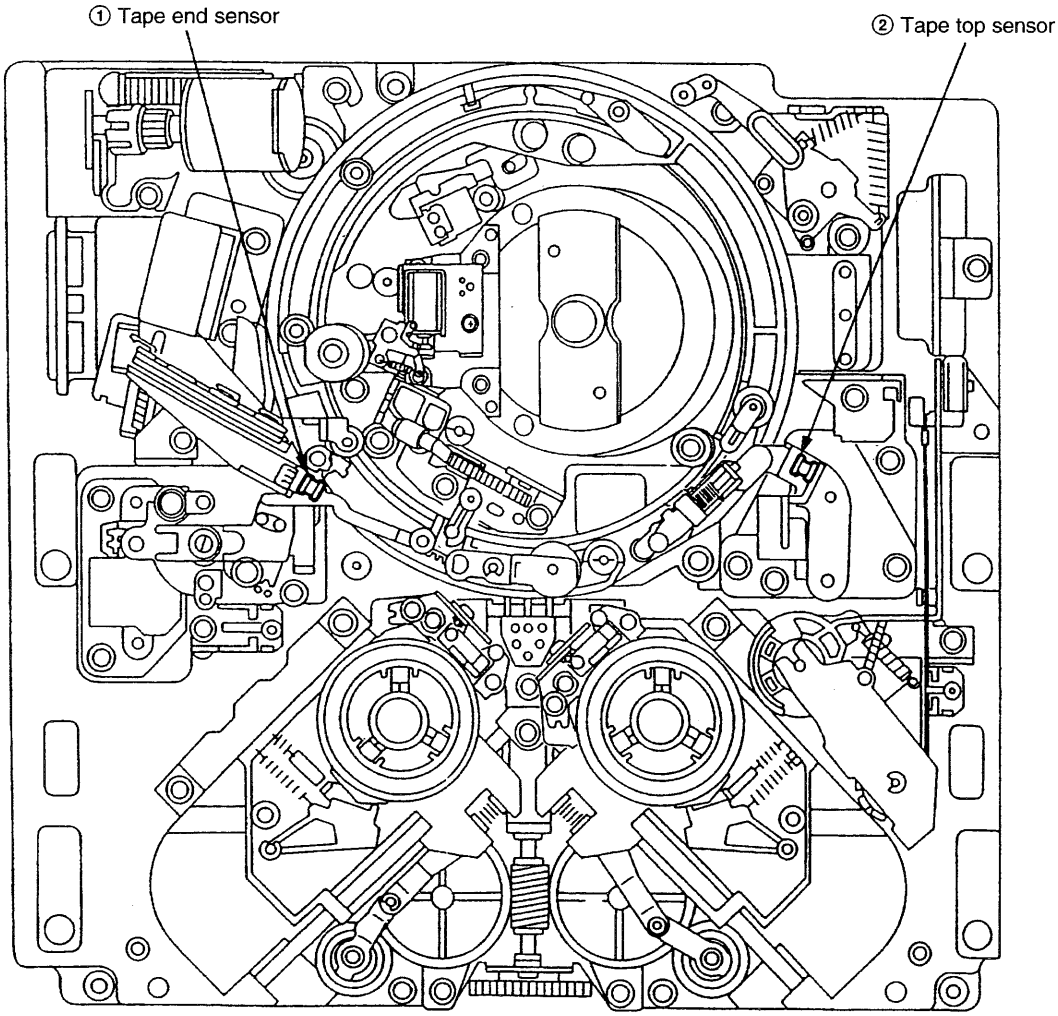

5-2-1. Servo System Check 1

d) C003: DEW SENSOR

This mode checks the function of the DEW (dew detection) sensor.

```
SERVO CHECK
 INPUT CHECK

C003:DEW SENSOR


  DEW SENSOR : DRY
```

(1) Confirm that the "DRY" display on the monitor screen changes to "WET !" when the sensor is slightly touched with a cotton swab moistened with water.

(2) Wipe the sensor with a dry cotton swab to eliminate water. Confirm that the display on the monitor screen returns from "WET !" to "DRY" when a wind is blown against the sensor using a blower to evaporate moisture.

In case of NG;

When the display does not change from "DRY" to "WET !" even if the sensor is moistened.

Check only the sensor.

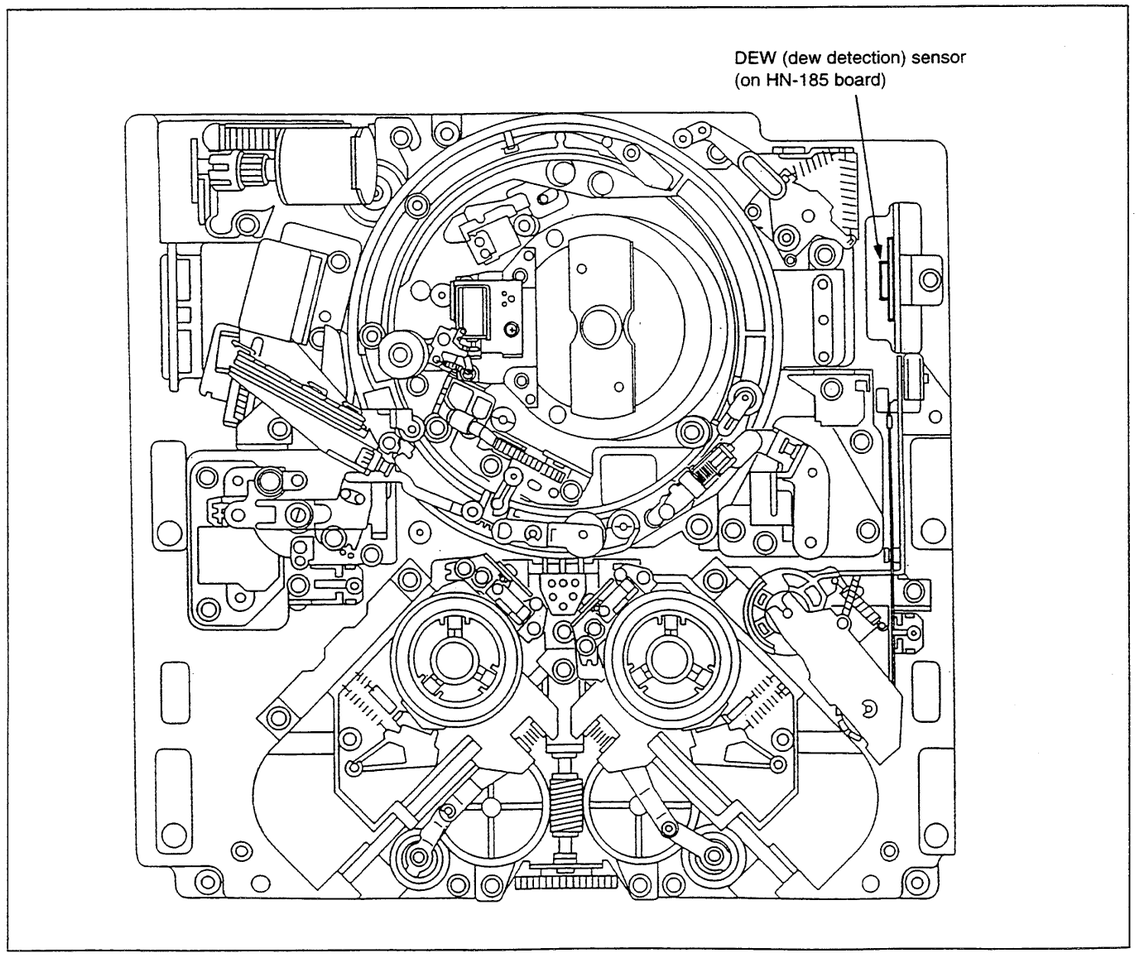

5-2-2. Servo System Check 2

5-2-2. Servo System Check 2 (C01: MOTOR CHECK)

This section describes the "C01: MOTOR CHECK" mode.

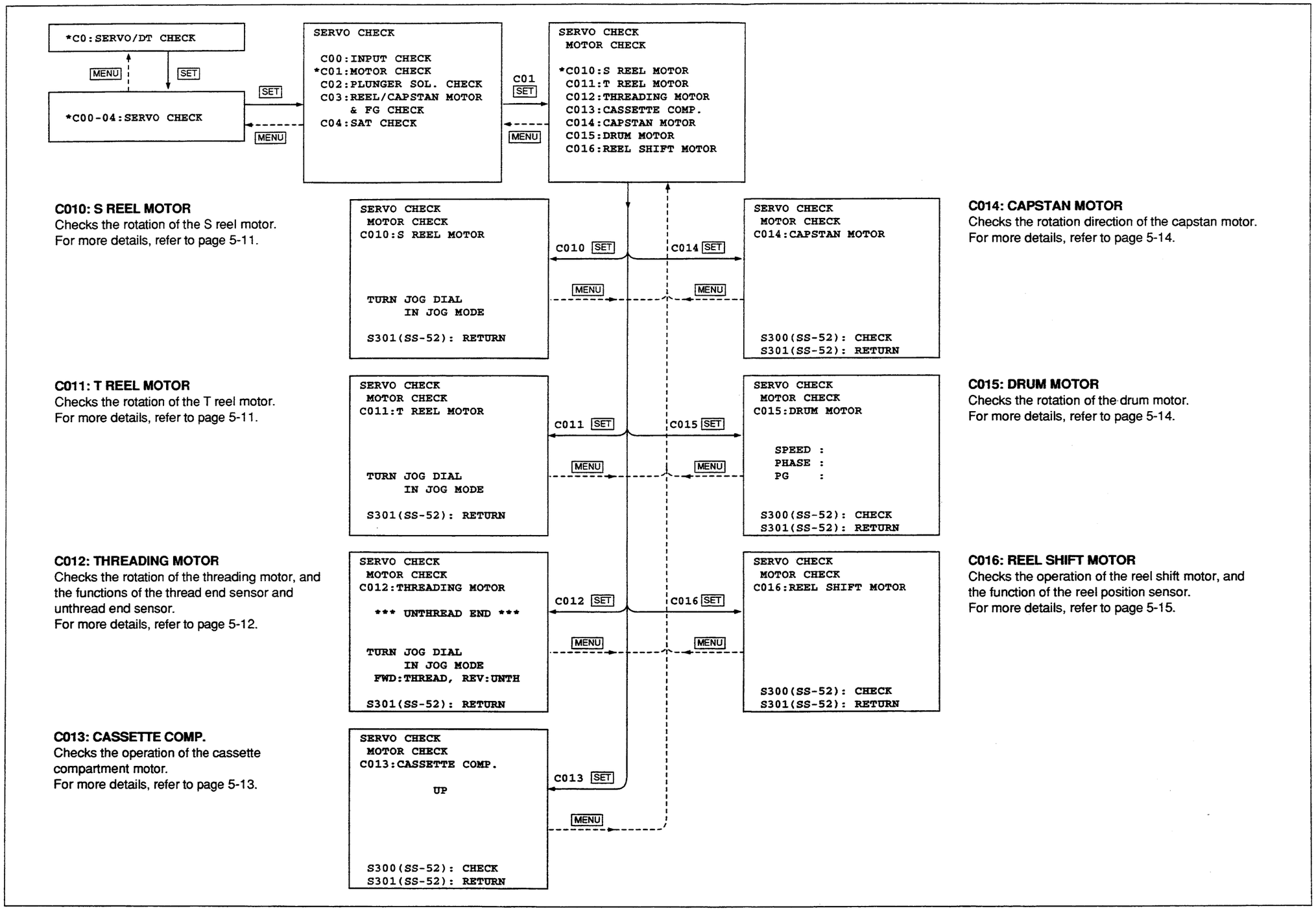

a) C010: S REEL MOTOR

This mode checks the rotation of the S reel motor.

```
SERVO CHECK
 MOTOR CHECK
C010:S REEL MOTOR



 TURN JOG DIAL
      IN JOG MODE

 S301(SS-52): RETURN
```

Turn the S reel motor using a search dial (JOG mode).

Dial	Rotation direction of the S reel motor
FWD	FORWARD (↻)
REV	REVERSE (↺)

Confirm that the S reel motor rotates in the direction specified by the dial after the S brake solenoid is turned on and after the S reel brake is released.

In case of NG;

When the ON operation sound of the S brake solenoid is not generated or when the S reel motor does not rotate in the direction specified by the dial.

Check the S reel motor driver circuit (DR-307/200 board).

b) C011: T REEL MOTOR

This mode checks the rotation of the T reel motor.

```
SERVO CHECK
 MOTOR CHECK
C011:T REEL MOTOR



 TURN JOG DIAL
      IN JOG MODE

 S301(SS-52): RETURN
```

Turn the T reel motor using a search dial (JOG mode).

Dial	Rotation direction of the T reel motor
FWD	FORWARD (↻)
REV	REVERSE (↺)

Confirm that the T reel motor rotates in the direction specified by the dial after the T brake solenoid is turned on and after the T reel brake is released.

In case of NG;

When the ON operation sound of the T brake solenoid is not generated or when the T reel motor does not rotate in the direction specified by the dial.

Check the T reel motor driver circuit (DR-307/200 board).

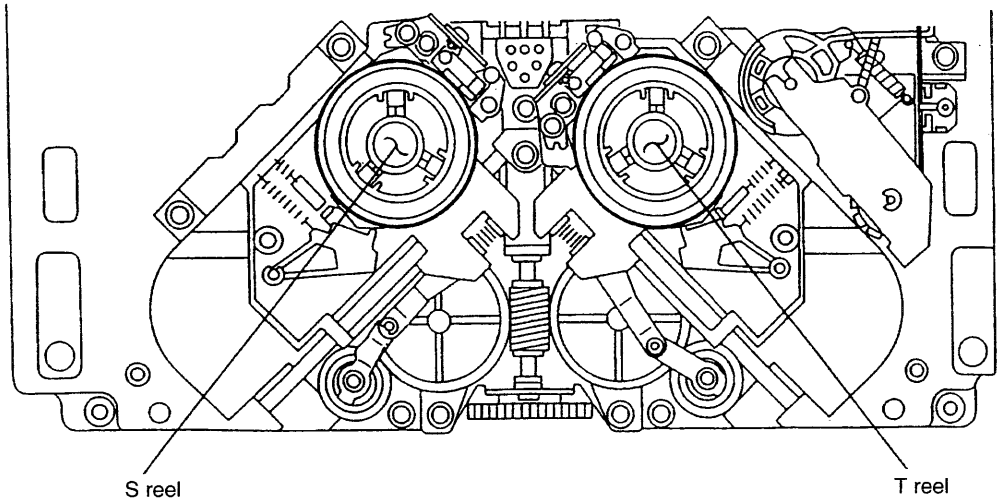

c) C012: THREADING MOTOR

This mode checks the rotation of the threading motor, and the functions of the thread end sensor and unthread end sensor.

```
SERVO CHECK
 MOTOR CHECK
C012:THREADING MOTOR

  *** UNTHREAD END ***


 TURN JOG DIAL
      IN JOG MODE
  FWD:THREAD, REV:UNTH

 S301(SS-52): RETURN
```

Turn the threading motor using a search dial (JOG mode). As a result, the thread ring moves as shown in the table below.

Dial	Movement of the threading ring
FWD	Threading
REV	Unthreading

Confirm that the display on the monitor screen changes as shown below.

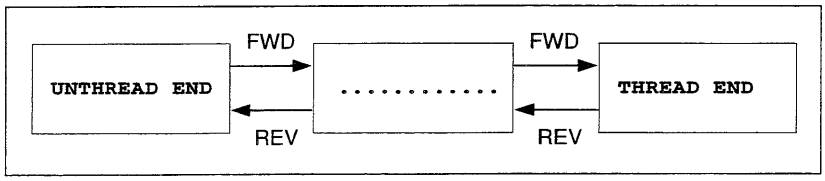

Threading Motor Check

In case of NG;

When the threading motor does not rotate.

Check the threading motor and the FG sensor on the PTC-54 board.

Also check the threading motor driver circuit (DR-307/200 board) and the threading FG amplifier circuit (DR-307/200 board).

When the display remains "....." with the unit set to the thread end/unthread end state.

Check the thread end sensor and unthread end sensor on the TR-79 board.

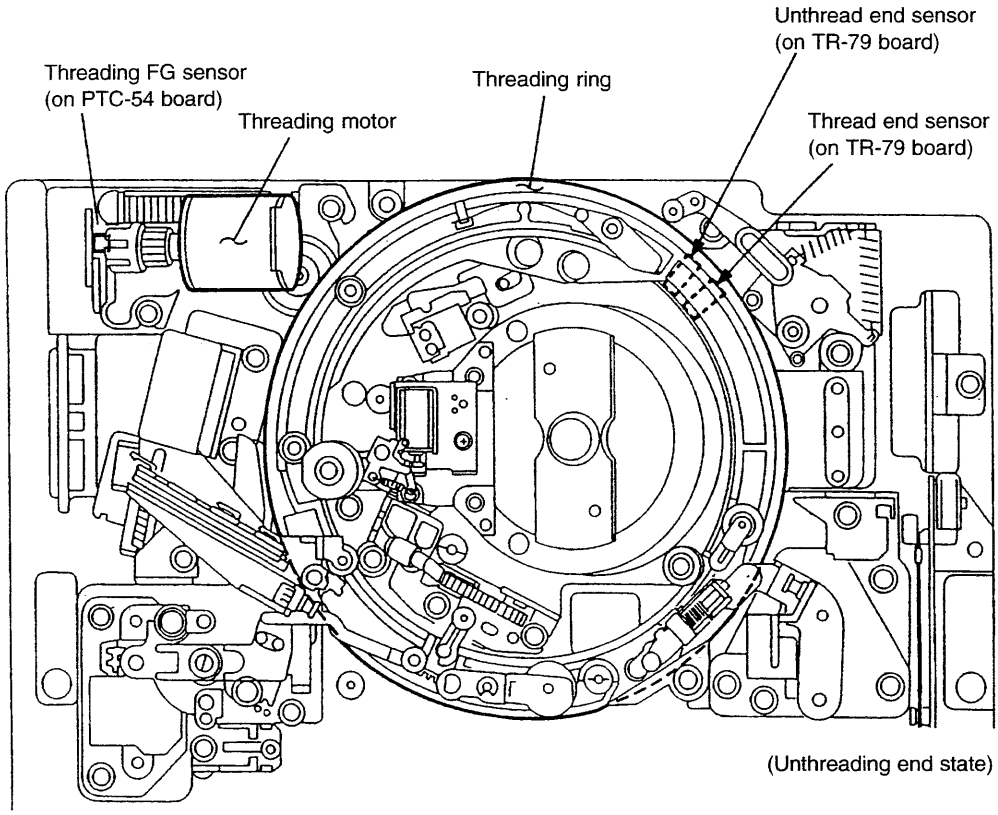

d) C013: CASSETTE COMP.

This mode checks the operation of the cassette compartment motor, and the function of the cassette down sensor.

```
SERVO CHECK
 MOTOR CHECK
C013:CASSETTE COMP.

          UP



 S300(SS-52): CHECK
 S301(SS-52): RETURN
```

(1) Press the SET button (or switch S300 on the SS board).
Confirm that the compartment block goes down. At that time, confirm that the display on the monitor screen changes as shown below.

UP → HORIZ. → VERT. → DOWN

(2) Press the SET button (or switch S300 on the SS board) again.
Confirm that the compartment block goes up. At that time, confirm that the display on the monitor screen changes as shown below.

DOWN → VERT. → HORIZ. → UP

In case of NG;

When the cassette compartment motor does not rotate.
Check the cassette compartment motor.
Also check the cassette compartment motor driver circuit (DR-307/200 board).

When the compartment block goes up and down normally, but the display does not change.
Check the cassette down sensor.
Also check the sensor input circuit on the DR-307/200 board.

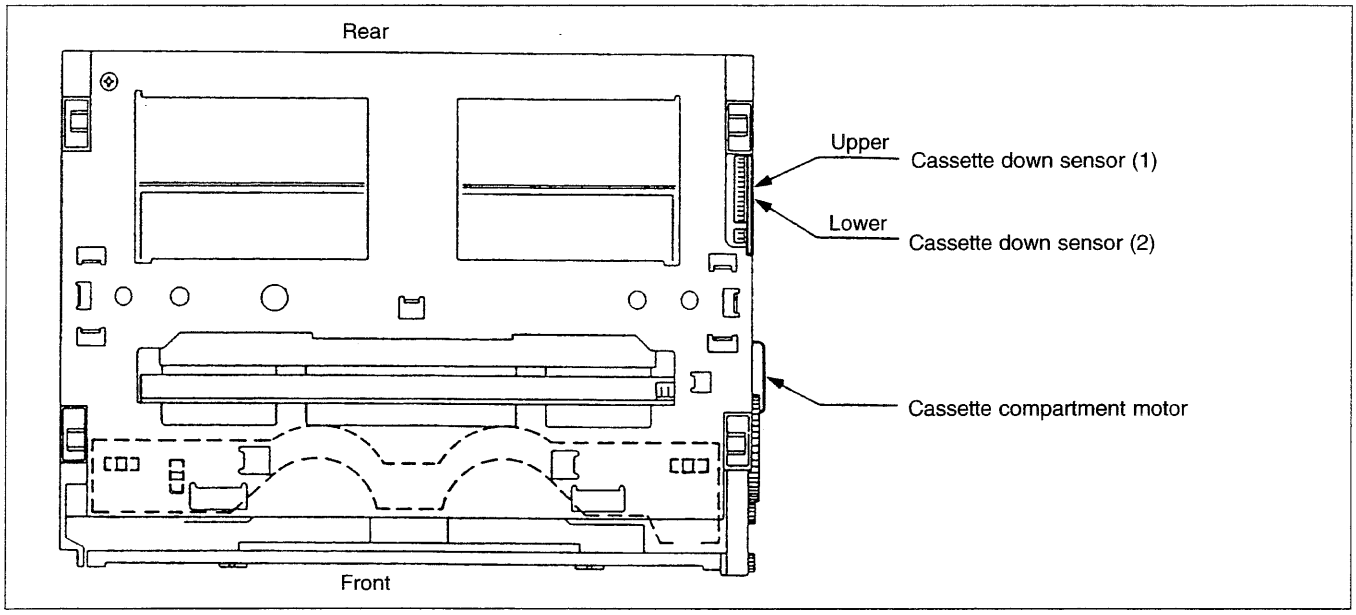

Top View of the Cassette Compartment

e) C014: CAPSTAN MOTOR

This mode checks the rotation direction of the capstan motor.

```
SERVO CHECK
 MOTOR CHECK
C014:CAPSTAN MOTOR




 S300(SS-52): CHECK
 S301(SS-52): RETURN
```

(1) Press the SET button (or switch S300 on the SS board).
Confirm that the capstan motor rotates in the forward direction (↻) and that the "FORWARD .... OK" display appears on the monitor screen.

(2) Press the SET button (or switch S300 on the SS board) again.
Confirm that the capstan motor rotates in the reverse direction (↺) and that the "REVERSE .... OK" display appears on the monitor screen.

In case of NG;

When the capstan motor does not rotate.
Check the capstan motor.
Also check capstan motor driver circuit (DR-307/200 board).

When the capstan motor rotates normally, but the "OK" display does not appear on the monitor screen.
Check the capstan motor.
Also check the capstan FG amplifier input circuit (DR-307/200 board).

f) C015: DRUM MOTOR

This mode checks the rotation of the drum motor.

```
SERVO CHECK
 MOTOR CHECK
C015:DRUM MOTOR


   SPEED :
   PHASE :
   PG    :


 S300(SS-52): CHECK
 S301(SS-52): RETURN
```

(1) Press the SET button (or switch S300 on the SS board) to initiate this check.
The display on the monitor screen at that time is as shown below.

SPEED : NG
PHASE : UNLOCK
PG : NO EXIST

SET or S300

```
SERVO CHECK
 MOTOR CHECK
C015:DRUM MOTOR


   SPEED :   OK
   PHASE :   LOCK
   PG    :   EXIST


 S300(SS-52): CHECK
 S301(SS-52): RETURN
```

Check completed (OK)

(2) Confirm that the display on the monitor screen changes as shown at right after a little while.

In case of NG;

When the display on the monitor screen does not change.
Check the drum motor driver circuit (DR-307/200 board), the drum FG amplifier circuit (DR-307/200 board), and the drum PG amplifier circuit (DR-307/200 board).

g) C016: REEL SHIFT MOTOR

This mode checks the operation of the reel shift motor, and the function of the reel position sensor.

```
SERVO CHECK
 MOTOR CHECK
C016:REEL SHIFT MOTOR

      S-POSITION


 S300(SS-52): CHECK
 S301(SS-52): RETURN
```

Confirm that the reel table moves from the S position to the L position (from the L position to the S position) when the SET button (or switch S300 on the SS board) is pressed. Also confirm that the display on the monitor screen changes as shown below.

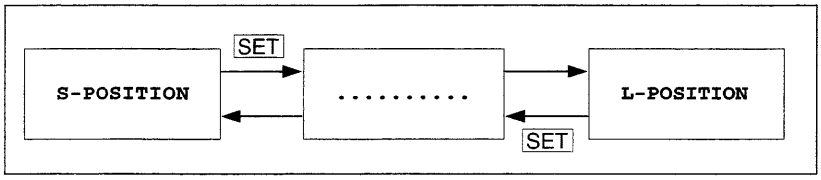

In case of NG;

When the reel shift motor does not rotate.

Check the reel shift motor.

Also check the reel shift motor driver circuit (DR-307/200 board).

When the display remains "....." with the reel table moved to the L position or S position.

Check the L position/S position sensor (PTC-71 board).

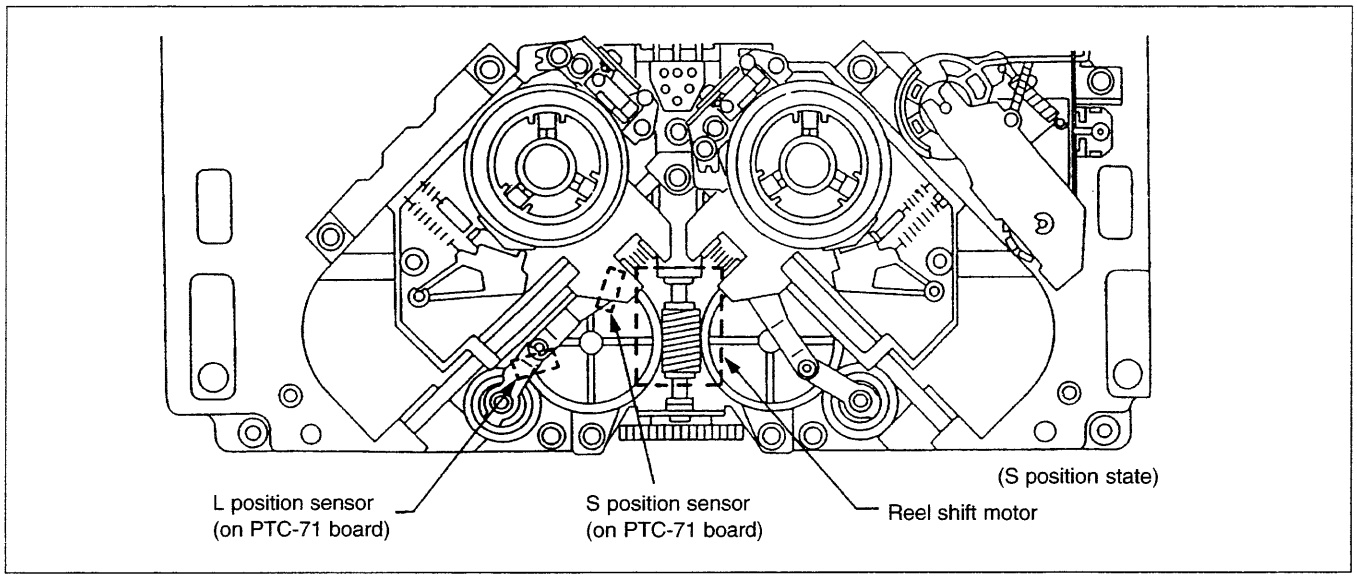

5-2-3. Servo System Check 3 (C02: PLUNGER SOLENOID CHECK)

This section describes the "C02: PLUNGER SOLENOID CHECK" mode.

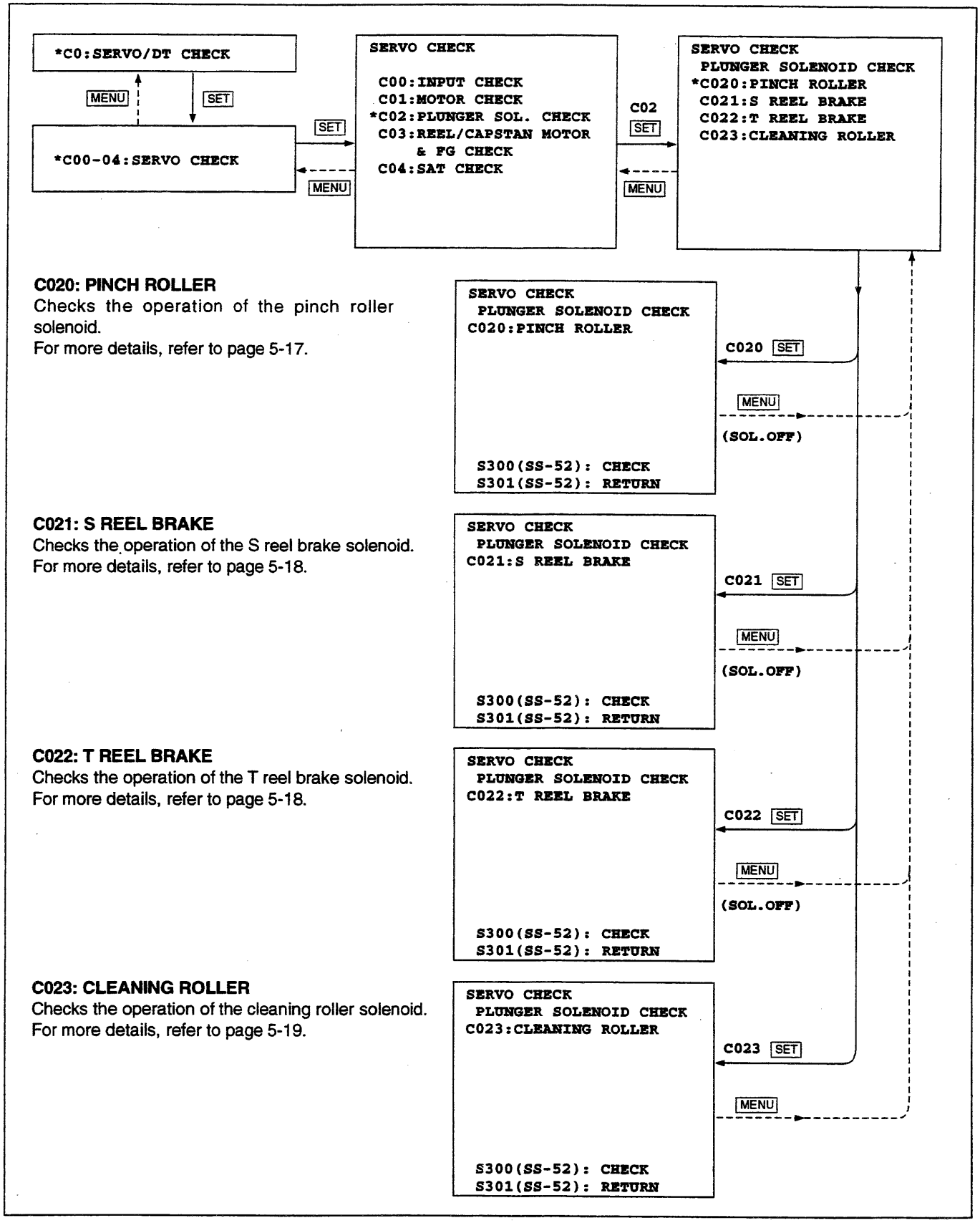

C020: PINCH ROLLER
Checks the operation of the pinch roller solenoid.
For more details, refer to page 5-17.

C021: S REEL BRAKE
Checks the operation of the S reel brake solenoid.
For more details, refer to page 5-18.

C022: T REEL BRAKE
Checks the operation of the T reel brake solenoid.
For more details, refer to page 5-18.

C023: CLEANING ROLLER
Checks the operation of the cleaning roller solenoid.
For more details, refer to page 5-19.

a) C020: PINCH ROLLER

This mode checks the operation of the pinch roller solenoid.

```
SERVO CHECK
 PLUNGER SOLENOID CHECK
C020:PINCH ROLLER



 S300(SS-52): CHECK
 S301(SS-52): RETURN
```

(1) Press the SET button (or switch S300 on the SS board).
Confirm by the generation of a sound that the pinch solenoid is turned on.

(2) Press the MENU button (or switch S301 on the SS board).
The drive voltage of the pinch solenoid is then turned off.
The monitor screen returns to the submenu.

(3) Push the pinch lever slightly in the direction of the pinch solenoid with fingers.
The core of the pinch solenoid then returns to the former position.

In case of NG;

When the sound indicating that the pinch solenoid is turned on is not generated or when the monitor screen does not change.
Check the pinch solenoid.
Also check the solenoid driver circuit on the DR-307/200 board.

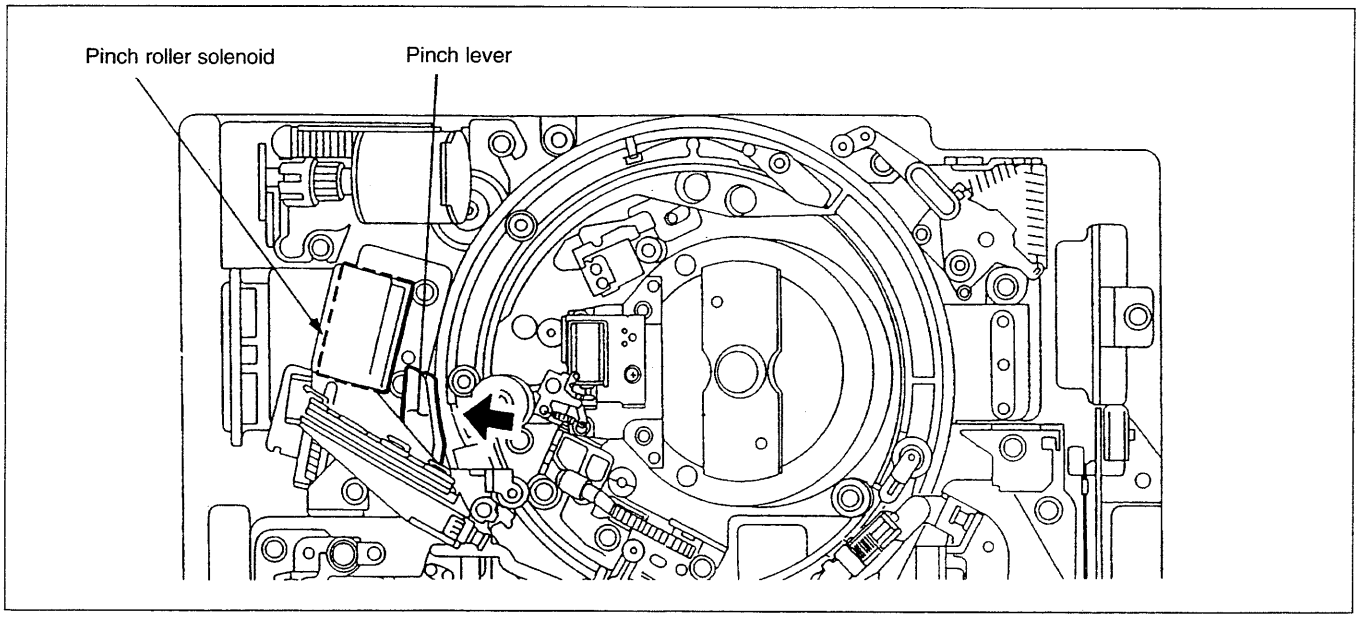

b) C021: S REEL BRAKE

This mode checks the operation of the S reel brake solenoid.

```
SERVO CHECK
 PLUNGER SOLENOID CHECK
C021:S REEL BRAKE



 S300(SS-52): CHECK
 S301(SS-52): RETURN
```

(1) Press the SET button (or switch S300 on the SS board).
Confirm by the generation of a sound that the S reel brake solenoid is turned on.

(2) Press the MENU button (or switch S301 on the SS board).
The core of the S reel brake solenoid then returns to the former position.
The monitor screen returns to the submenu.

In case of NG;

When the sound indicating that the S reel brake solenoid is turned on is not generated or when the monitor screen does not change.
Check the S reel brake solenoid.
Also check the solenoid driver circuit on the DR-307/200 board.

c) C022: T REEL BRAKE

This mode checks the operation of the T reel brake solenoid.

```
SERVO CHECK
 PLUNGER SOLENOID CHECK
C022:T REEL BRAKE



 S300(SS-52): CHECK
 S301(SS-52): RETURN
```

(1) Press the SET button (or switch S300 on the SS board).
Confirm by the generation of a sound that the T reel brake solenoid is turned on.

(2) Press the MENU button (or switch S301 on the SS board).
The core of the T reel brake solenoid then returns to the former position.
The monitor screen returns to the submenu.

In case of NG;

When the sound indicating that the T reel brake solenoid is turned on is not generated or when the monitor screen does not change.
Check the T reel brake solenoid.
Also check the solenoide driver circuit on the DR-307/200 board.

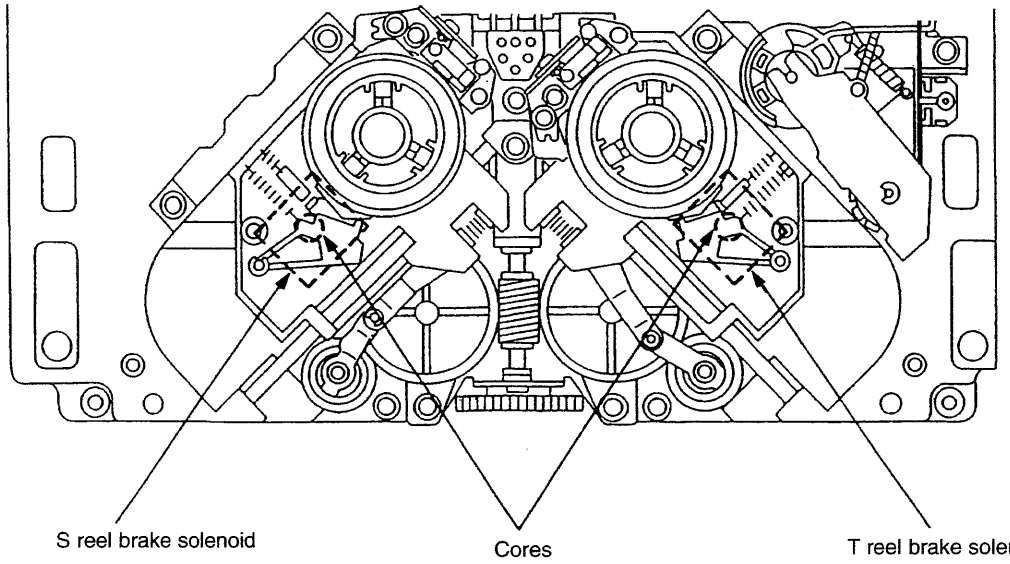

d) C023: CLEANING ROLLER

This mode checks the operation of the cleaning roller solenoid.

```
SERVO CHECK
 PLUNGER SOLENOID CHECK
C023:CLEANING ROLLER



 S300(SS-52): CHECK
 S301(SS-52): RETURN
```

(1) Press the SET button (or switch S300 on the SS board).
Confirm that the cleaning roller solenoid is activated, the cleaning roller touches the drum, and it is immediately released from the drum.

(2) Press the MENU button (or switch S301 on the SS board).
The monitor screen returns to the submenu.

Note: The cleaning roller solenoid is burned when it continuosly remains on. If the cleaning roller solenoid is not released from the drum, turn the power of this unit off as soon as possible.

In case of NG;

When the cleaning roller dose not touch the drum or it is not release from the drum.
Check the cleaning roller solenoid.
Also check the solenoid driver circuit on the DR-307/200 board.

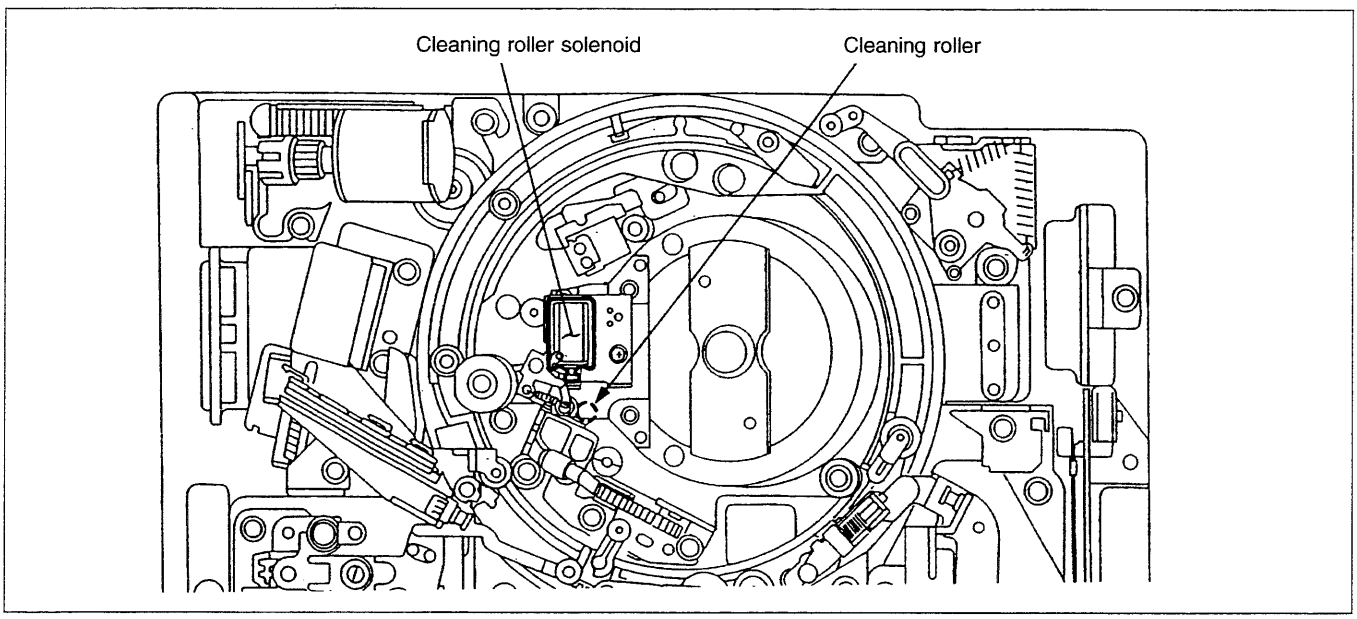

5-2-4. Servo System Check 4 (C03: REEL/CAPSTAN MOTOR & FG CHECK)

This section describes the "C03: REEL/CAPSTAN MOTOR & FG CHECK" mode.

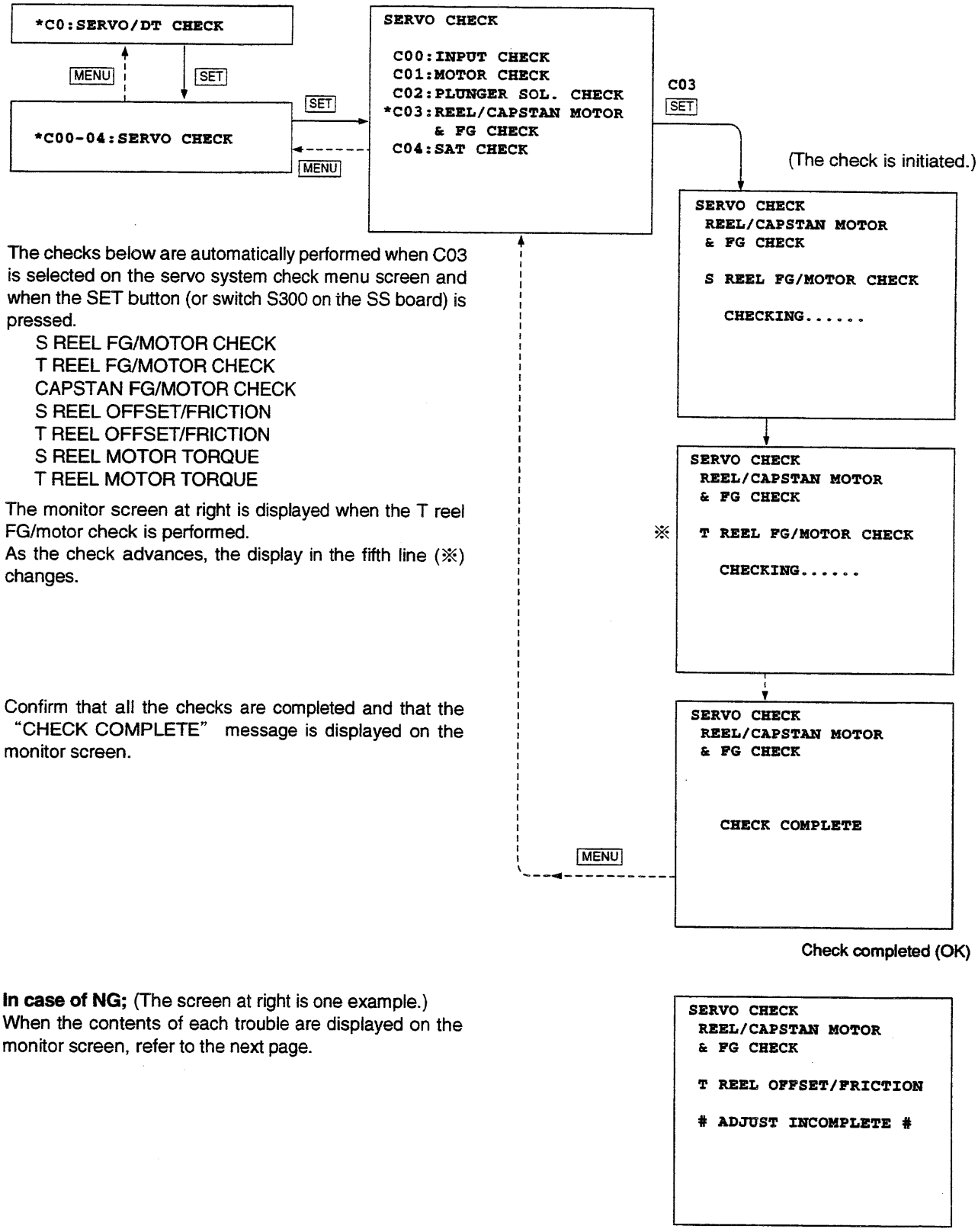

The checks below are automatically performed when C03 is selected on the servo system check menu screen and when the SET button (or switch S300 on the SS board) is pressed.

- S REEL FG/MOTOR CHECK
- T REEL FG/MOTOR CHECK
- CAPSTAN FG/MOTOR CHECK
- S REEL OFFSET/FRICTION
- T REEL OFFSET/FRICTION
- S REEL MOTOR TORQUE
- T REEL MOTOR TORQUE

The monitor screen at right is displayed when the T reel FG/motor check is performed.
As the check advances, the display in the fifth line (※) changes.

Confirm that all the checks are completed and that the "CHECK COMPLETE" message is displayed on the monitor screen.

In case of NG; (The screen at right is one example.)
When the contents of each trouble are displayed on the monitor screen, refer to the next page.

a) S REEL FG/MOTOR CHECK
Checks the duty cycle of the S reel FG.

In case of NG;
Check the S reel motor (C010: S REEL MOTOR).
If no abnormality is found, adjust the duty cycle of the S reel FG (A001: S REEL FG DUTY).

b) T REEL FG/MOTOR CHECK
Checks the duty cycle of the T reel FG.

In case of NG;
Check the T reel motor (C011: T REEL MOTOR).
If no abnormality is found, adjust the duty cycle of the T reel FG (A002: T REEL FG DUTY).

c) CAPSTAN FG/MOTOR CHECK
Checks the duty cycle of the capstan FG.

In case of NG;
Check the capstan motor (C014: CAPSTAN MOTOR).
If no abnormality is found, adjust the duty cycle of the capstan FG (A003: CAPSTAN FG DUTY).

d) S REEL OFFSET/FRICTION
Checks the offset and friction levels of the S reel.

In case of NG;
Check the S reel motor (C010: S REEL MOTOR).
If no abnormality is found, adjust the offset and friction of the S reel (A004: S REEL OFFSET/FRIC).

e) T REEL OFFSET/FRICTION
Checks the offset and friction levels of the T reel.

In case of NG;
Check the T reel motor (C011: T REEL MOTOR).
If no abnormality is found, adjust the offset and friction of the T reel (A005: T REEL OFFSET/FRIC).

f) S REEL MOTOR TORQUE
Checks the torque of the S reel.

In case of NG;
Check the S reel motor (C010: S REEL MOTOR).
If no abnormality is found, adjust the torque of the S reel (A006: S REEL TORQUE).

g) T REEL MOTOR TORQUE
Checks the torque of the T reel.

In case of NG;
Check the T reel motor (C011: T REEL MOTOR).
If no abnormality is found, adjust the torque of the T reel (A007: T REEL TORQUE).

5-2-5. Servo System Check 5 (C04: SAT CHECK)

This section describes the "C04: SAT CHECK" mode.

SAT; Supplemental Auto Tracking

To perform this check, alignment tape ZR2-1P/1 on which the beginning of the time code is beforehand located in "00:25:00:00" is required.

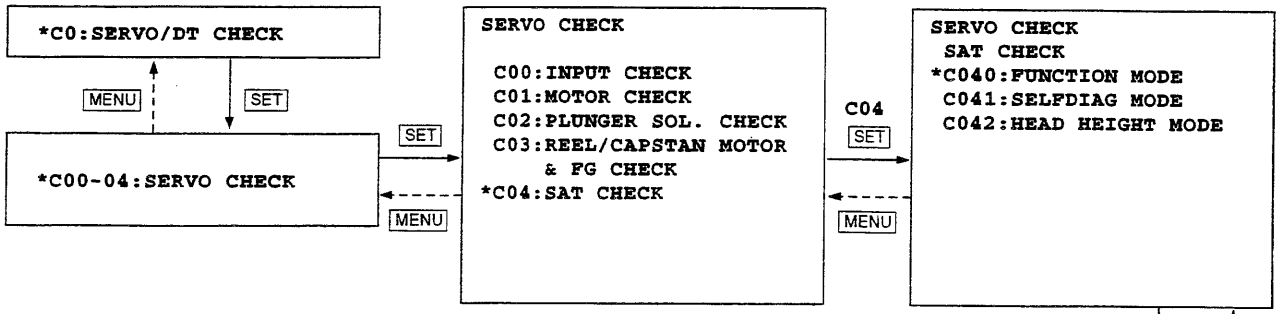

C040: FUNCTION MODE
Checks the SAT operation.
Checks the operation in the normal operation range.
For more details, refer to page 5-23.

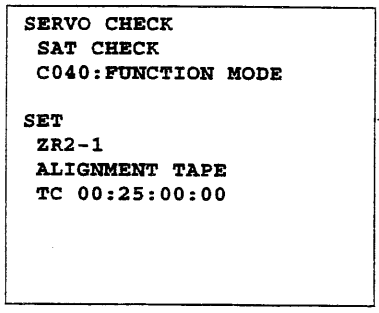

C041: SELFDIAG MODE
Checks the SAT operation.
Releases the tracking, then checks the SAT operation.
For more details, refer to page 5-23.

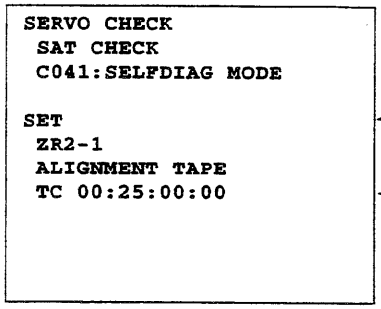

C042: HEAD HEIGHT MODE
Checks the record heads (channels C/A) for the pairing.
For more details, refer to page 5-24.

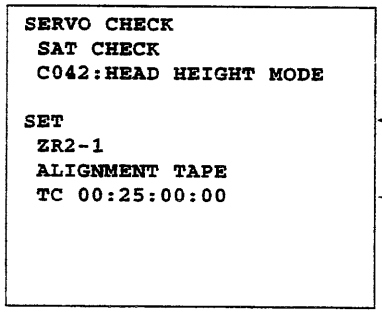

The "C042 : HEAD HEIGHT MODE" is added to the unit in which the SV 1 ROM (IC 761 on the SS board) version is 1.20 or higher.

a) C040: FUNCTION MODE

This mode checks the SAT operation in the normal operation range.

> To perform this check, alignment tape ZR2-1P/1 on which the beginning of the time code is beforehand located in "00:25:00:00" is required.

When alignment tape ZR2-1P/1 is inserted into this unit, this check is initiated automatically.

ZR2-1P ; for DVW-A500P/500P
ZR2-1 ; for DVW-A500/500

During check, PLAY and STOP modes are repeated six times.
Note: When the time code remarkably differs or when another tape is used, the "TIMING SIG TROUBLE" message is displayed on the monitor screen.

```
SERVO CHECK
 SAT CHECK
 C040:FUNCTION MODE

SET
 ZR2-1
 ALIGNMENT TAPE
 TC 00:25:00:00
```

Insert alignment tape

```
SERVO CHECK
 SAT CHECK
 C040:FUNCTION MODE

   CHECKING......
```

During check

Confirm that the check is completed and that the "COMPLETE" message is displayed on the monitor screen.
After the check is completed, the alignment tape is ejected automatically.

```
SERVO CHECK
 SAT CHECK
 C040:FUNCTION MODE

   COMPLETE
```

Check completed (OK)

In case of NG; (The screen at right is one example.)
When the "TIMING SIG TROUBLE" message is displayed on the monitor screen.
Check the SAT 400 kHz (TIMING SIGNAL) system circuit on the SS board.
If no abnormality is found, check the REC HEAD PB (channel A) system circuit on the EQ board.

When the "PILOTENV TROUBLE" message is displayed.
Check the SAT 4 MHz (RF ENVELOPE) system circuit on the SS board.
If no abnormality is found, check the REC HEAD PB (channel A) system circuit on the EQ board.

```
SERVO CHECK
 SAT CHECK
 C040:FUNCTION MODE

 # CHECK INCOMPLETE   #
 # TIMING SIG TROUBLE #
```

Check completed (NG)

5-2-5. Servo System Check 5

b) C041: SELFDIAG MODE

This mode checks the SAT operation after releases the tracking.

> To perform this check, alignment tape ZR2-1P/1 on which the beginning of the time code is beforehand located in "00:25:00:00" is required.

When alignment tape ZR2-1P/1 is inserted into this unit, this check is initiated automatically.

ZR2-1P ; for DVW-A500P/500P
ZR2-1 ; for DVW-A500/500

During check, the unit is put into the PLAY mode.
Note: When the time code remarkably differs or when another tape is used, the "TIMING SIG TROUBLE" message is displayed on the monitor screen.

```
SERVO CHECK
 SAT CHECK
 C041:SELFDIAG MODE

SET
 ZR2-1
 ALIGNMENT TAPE
 TC 00:25:00:00
```

Insert alignment tape

```
SERVO CHECK
 SAT CHECK
 C041:SELFDIAG MODE

   CHECKING......
```

During check

Confirm that the check is completed and that the "COMPLETE" message is displayed on the monitor screen.
After the check is completed, the alignment tape is ejected automatically.

```
SERVO CHECK
 SAT CHECK
 C041:SELFDIAG MODE

   COMPLETE
```

Check completed (OK)

In case of NG; (The screen at right is one example)
When the "TIMING SIG TROUBLE" message is displayed on the monitor screen.
Check the SAT 400 kHz (TIMING SIGNAL) system circuit on the SS board.
If no abnormality is found, check the REC HEAD PB (channel A) system circuit on the EQ board.

When the "PILOT ENV TROUBLE" message is displayed.
Check the SAT 4 MHz (RF ENVELOPE) system circuit on the SS board.
If no abnormality is found, check the REC HEAD PB (channel A) system circuit on the EQ board.

```
SERVO CHECK
 SAT CHECK
 C041:SELFDIAG MODE

 # CHECK INCOMPLETE   #
 # TIMING SIG TROUBLE #
```

Check completed (NG)

When the "OUT OF SPEC REC HEAD HEIGHT" messages are displayed.
Reinstall the inner drum assembly (refer to section 8-2-1), then replay this check mode.
When the same message is displayed again, replace the inner drum assembly (refer to section 8-2-1) and/or adjust the tape path (refer to section 8-4).

When the "OUT OF SPEC CTL DISTANCE" messages are displayed.
Adjusts the CTL head height. Refer to section 8-4-4.

When the "OUT OF SPEC RF SWITCHING POS." messages are displayed.
Perform the "A011:RF SWITCHING POS" in the RF system adjustment mode.

5-2-5. Servo System Check 5

c) C042: HEAD HEIGHT MODE

This mode checks the record heads (channels C/A) for the pairing.
This mode is added to the unit in which the SV1 ROM (IC761 on the SS board) version is 1.20 or higher.

> To perform this check, alignment tape ZR2-1P/1 on which the beginning of the time code is beforehand located in "00:25:00:00" is required.

(1) When alignment tape ZR2-1P/1 is inserted into this unit, this check is initiated automatically.
During check, the unit is put into the PLAY mode.

ZR2-1P ; for DVW-A500P/500P
ZR2-1 ; for DVW-A500/500

(2) Rewind the alignment tape ZR2-1P/1 to the time code "00:25:00:00" after the "REW TO TC 00:25:00;00 AND REPLAY" message is displayed on the monitor screen.
Press the PLAY button to resume check.
Repeat the above procedure two through five times until check is completed.

```
SERVO CHECK
 SAT CHECK
 C042:HEAD HEIGHT MODE

SET
 ZR2-1
 ALIGNMENT TAPE
 TC 00:25:00:00
```

Insert alignment tape

```
SERVO CHECK
 SAT CHECK
 C042:HEAD HEIGHT MODE

 REW TO
 TC 00:25:00:00
 AND REPLAY
```

Repeat times : 2 to 5

Rewind tape to TC 00:25:00:00, and PLAY

```
SERVO CHECK
 SAT CHECK
 C042:HEAD HEIGHT MODE

   CHECKING......
```

During check

(3) Confirm that the check is completed and that the "COMPLETE" message is displayed on the monitor screen.
After the check is completed, the alignment tape is ejected automatically.

```
SERVO CHECK
 SAT CHECK
 C042:HEAD HEIGHT MODE

   COMPLETE
```

Check completed (OK)

In case of NG; (The screen at right is one example)
When the "SAT TROUBLE" message is displayed on the monitor screen.
Perform the "C41 : SELFDIAG MODE".

When the "OUT OF SPEC REC HEAD HEIGHT" messages are displayed.
Reinstall the inner drum assembly (refer to section 8-2-1), then replay this check mode.
When the same message is displayed again, replace the inner drum assembly (refer to section 8-2-1) and/or adjust the tape path (refer to section 8-4).

```
SERVO CHECK
 SAT CHECK
 C042:HEAD HEIGHT MODE

 # CHECK INCOMPLETE    #
 # SAT TROUBLE         #
```

Check completed (NG)

5-2-6. Digital DT System Check (C05: DIGITAL DT CHECK)

This section describes the "C05: DIGITAL DT CHECK" mode.

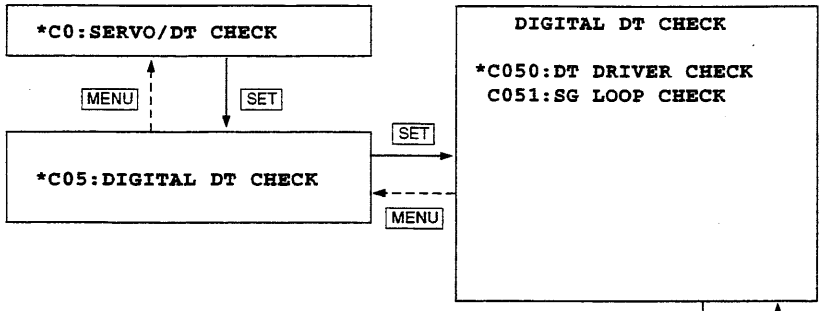

C050: DT DRIVER CHECK
Checks the bimorph drive control circuit by the loopback in a bimorph drive amplifier.
For more details, refer to page 5-26.

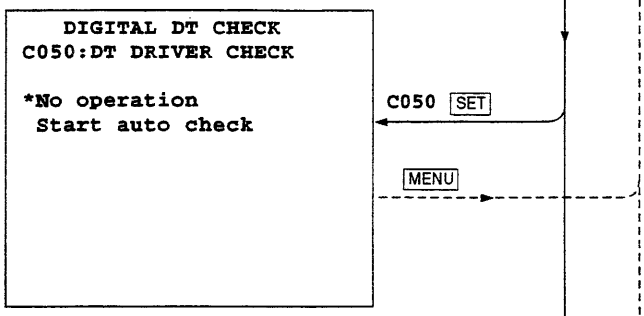

C051: SG LOOP CHECK
Checks the feedback loop of the strain gauge.
For more details, refer to page 5-27.

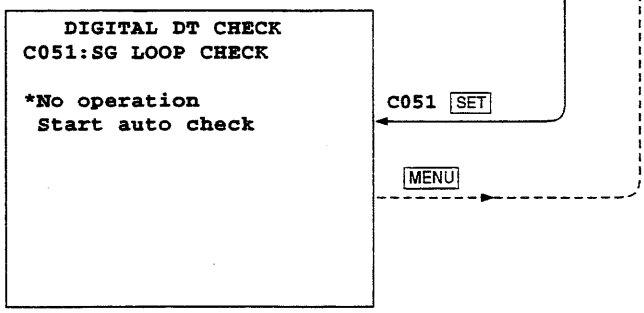

a) C050: DT DRIVER CHECK

This mode checks the bimorph drive control circuit (on the SS board) by the loopback in a bimorph drive amplifier (on the DT-34 board).

(1) Set the "*" mark to "Start auto check" using a search dial (JOG mode).

```
   DIGITAL DT CHECK
C050:DT DRIVER CHECK

*No operation
 Start auto check
```

(1) DIAL
(2) SET or S300

(2) When the SET button (or switch S300 on the SS board) is pressed after the "Push SET button" message is displayed, this check is initiated.

```
   DIGITAL DT CHECK
C050:DT DRIVER CHECK

 No operation
*Start auto check


   CHECKING......
```

During check

(3) Confirm that the check is completed and that the "CHECK COMPLETE" message is displayed on the monitor screen.

```
   DIGITAL DT CHECK
C050:DT DRIVER CHECK

 No operation
*Start auto check


   CHECK COMPLETE
```

Check completed (OK)

In case of NG; (The screen at right is one example.)
When the "CHECK COMPLETE" message is not displayed on the monitor screen.
Check bimorph drive amplifier (DT-34 board) and slip ring.
Also check the bimorph drive control circuit (SS board).

```
   DIGITAL DT CHECK
C050:DT DRIVER CHECK

 No operation
*Start auto check


 # CHECK INCOMPLETE #
     A/Bch
```

Check completed (NG)

b) C051: SG LOOP CHECK

This mode checks the feedback loop of the strain gauge.

(1) Set the "*" mark to "Start auto check" using a search dial (JOG mode).

```
   DIGITAL DT CHECK
C051:SG LOOP CHECK

*No operation
 Start auto check
```

(1) DIAL
(2) SET or S300

(2) When the SET button (or switch S300 on the SS board) is pressed after the "Push SET button" message is displayed, this check is initiated.

```
   DIGITAL DT CHECK
C051:SG LOOP CHECK

 No operation
*Start auto check


   CHECKING......
```

During check

(3) Confirm that the check is completed and that the "CHECK COMPLETE" message is displayed on the monitor screen.

```
   DIGITAL DT CHECK
C051:SG LOOP CHECK

 No operation
*Start auto check


   CHECK COMPLETE
```

Check completed (OK)

In case of NG; (The screen at right is one example.)
When the "CHECK COMPLETE" message is not displayed on the monitor screen.

Execute the DT driver check (C050: DT DRIVER CHECK).
If no abnormality is found in this case, check the advance head/strain gauge of the inner drum or its signal transmission system (slip ring etc.).

```
   DIGITAL DT CHECK
C051:SG LOOP CHECK

 No operation
*Start auto check


 # CHECK INCOMPLETE #
     A/Bch
```

Check completed (NG)

5-2-7. Analog DT System Check (For DVW-A500P/A500) (C06: ANALOG DT CHECK)

This section describes the "C06: ANALOG DT CHECK" mode.

Exclusive mode for the DVW-A500P/A500

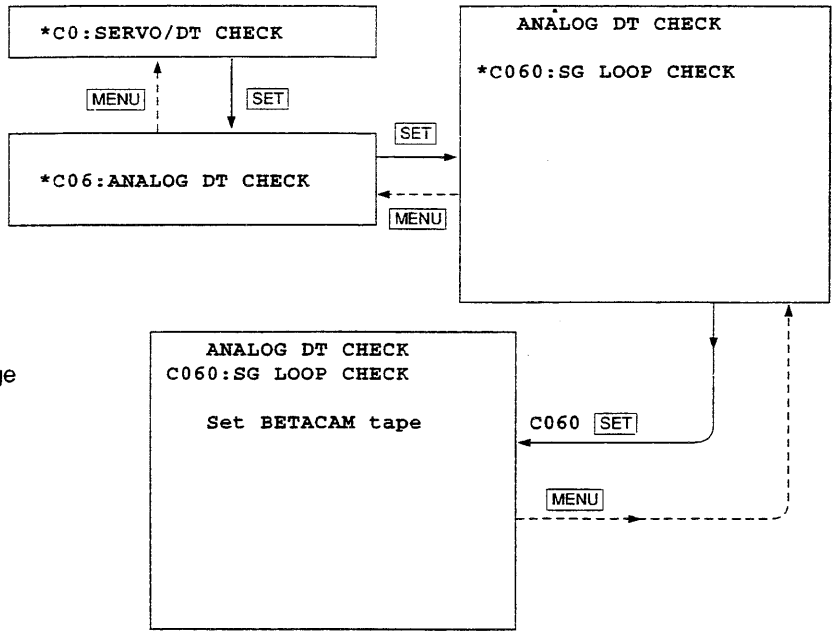

C060: SG LOOP CHECK
Checks the feedback loop of the strain gauge for Betacam playback.
For more details, refer to next page.

a) C060: SG LOOP CHECK

This mode checks the feedback loop of the strain gauge for Betacam playback.

When a Betacam cassette tape is inserted into this unit, this check is initiated automatically.
(To put the unit into the Betacam PB mode, the Betacam cassette tape is inserted irrespective of its contents.)

```
   ANALOG DT CHECK
C060:SG LOOP CHECK

   Set BETACAM tape
```

Insert a Betacam cassette tape

```
   ANALOG DT CHECK
C060:SG LOOP CHECK

   CHECKING......
```

During check

Confirm that the check is completed and that the "CHECK COMPLETE" message is displayed on the monitor screen.

Press the MENU button (or switch S301 on the SS board) two times to return to the servo/DT system check mode menu. The cassette tape is ejected automatically.

```
   ANALOG DT CHECK
C060:SG LOOP CHECK

   CHECK COMPLETE

   EJECT TAPE
```

Check completed (OK)

In case of NG; (The screen at right is one example.)
When the "CHECK COMPLETE" message is not displayed on the monitor screen.

Execute the strain gauge loop check (C051: SG LOOP CHECK) in the digital DT system.
If no abnormality is found, check the Betacam PB bimorph head/strain gauge of the inner drum or its signal transmission system (slip ring etc.).

```
   ANALOG DT CHECK
C060:SG LOOP CHECK

 # CHECK INCOMPLETE #

   EJECT TAPE
```

Check completed (NG)

5-3. RF SYSTEM CHECK MODE (C1: RF CHECK)

This mode can check the RF system. (Do it with the pre-read off.)
For how to activate and terminate the maintenance mode, refer to page 5-3.

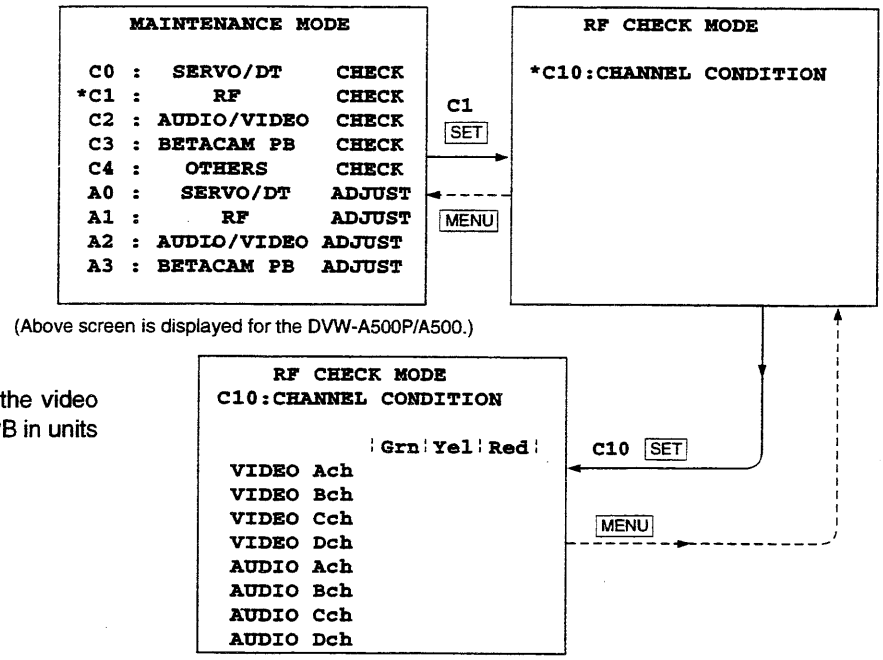

(Above screen is displayed for the DVW-A500P/A500.)

C10: CHANNEL CONDITION
Can display the error condition in all the video and audio channels during REC and PB in units of three stages on the monitor screen.
For more details, refer to next page.

a) C10: CHANNEL CONDITION

This mode can display the error condition in all the video and audio channels during REC and PB in units of three stages on the monitor screen.

The channel condition indicator on the upper control panel indicates the error condition in the worst channel among all the video and audio channels.

```
    RF CHECK MODE
C10:CHANNEL CONDITION

              ¦Grn¦Yel¦Red¦
 VIDEO Ach
 VIDEO Bch
 VIDEO Cch
 VIDEO Dch
 AUDIO Ach
 AUDIO Bch
 AUDIO Cch
 AUDIO Dch
```

(1) Press the SET button (or switch S300 on the SS board) on the screen at right. At that time, the unit temporarily exits the maintenance mode. This enables the normal operation.
(Prompt "■" is displayed in the upper right position of the superimposed screen, and the time counter is put into the normal state.)

(1) SET or S300
(2) Playback or Recording

```
    RF CHECK MODE                ■
C10:CHANNEL CONDITION

              ¦Grn¦Yel¦Red¦
 VIDEO Ach   >>>
 VIDEO Bch   >>>
 VIDEO Cch   >>>
 VIDEO Dch   >>>
 AUDIO Ach   >>>
 AUDIO Bch   >>>
 AUDIO Cch   >>>
 AUDIO Dch   >>>
```

(2) Insert the cassette tape recorded by the digital Betacam and play back it, or insert the no-recorded cassette tape and record it. The ">>>" display then appears on the monitor screen.

During PB, the channel condition can be displayed in the modes below.
- PLAY
- STILL
- VAR (FWD/REV)
- SHUTTLE (FWD/REV)···−1 to 3 times the normal speed
- JOG (FWD/REV)

Confirm that the ">>>" display appears in the Grn position in all the channels.

(3) EJECT
MENU or S301

```
    RF CHECK MODE
C10:CHANNEL CONDITION

              ¦Grn¦Yel¦Red¦
 VIDEO Ach
 VIDEO Bch
 VIDEO Cch
 VIDEO Dch
 AUDIO Ach
 AUDIO Bch
 AUDIO Cch
 AUDIO Dch
```

(3) To terminate the operation, stop the tape running and eject the cassette tape. (The ">>>" display disappears.)
Press the MENU button (or switch S301 on the SS board) to return to the maintenance mode.
(The "■" display disappears on the monitor screen, and the time counter displays menu number C10.)

```
    RF CHECK MODE                ■
C10:CHANNEL CONDITION

              ¦Grn¦Yel¦Red¦
 VIDEO Ach   >>>
 VIDEO Bch   >>>
 VIDEO Cch       >>>
 VIDEO Dch       >>>
 AUDIO Ach   >>>
 AUDIO Bch   >>>
 AUDIO Cch       >>>
 AUDIO Dch       >>>
```

When the ">>>" display appears in positions other than "Grn", clean the drum (rotary heads).
(a) Cleaning by the cleaning tape (Refer to Section 1-11-1.)
∗Cleaning time is five seconds.
(b) Cleaning by the cleaning cloth (Refer to Section 1-11-2.)
If the channel condition is not improved after performing the step (a) and (b), there is a possibility to improve the situation by use of cleaning tape repeatedly.
It should be less than 4 times of 5 seconds cleaning in total.
If the channel condition is not improved in the way mentioned above, the possible causes below are considered.

Playback tape fault:
- The tape is damaged.
- The recording state is bad.

Main unit faults:
- Tape running system adjustment defect/part installation defect
- RF system adjustment defect
- DT system adjustment defect
- Worn head
- Harness defect
- Brush/Slip ring defect
- Circuit defect

5-4. AUDIO/VIDEO SYSTEM CHECK MODE (C2: AUDIO/VIDEO CHECK)

This mode sets the system E-E function and multiloop function operations during maintenance mode execution.
It also can set the operation of an audio/video signal generator incorporated into this unit.
For how to activate and terminate the maintenance mode, refer to page 5-3.

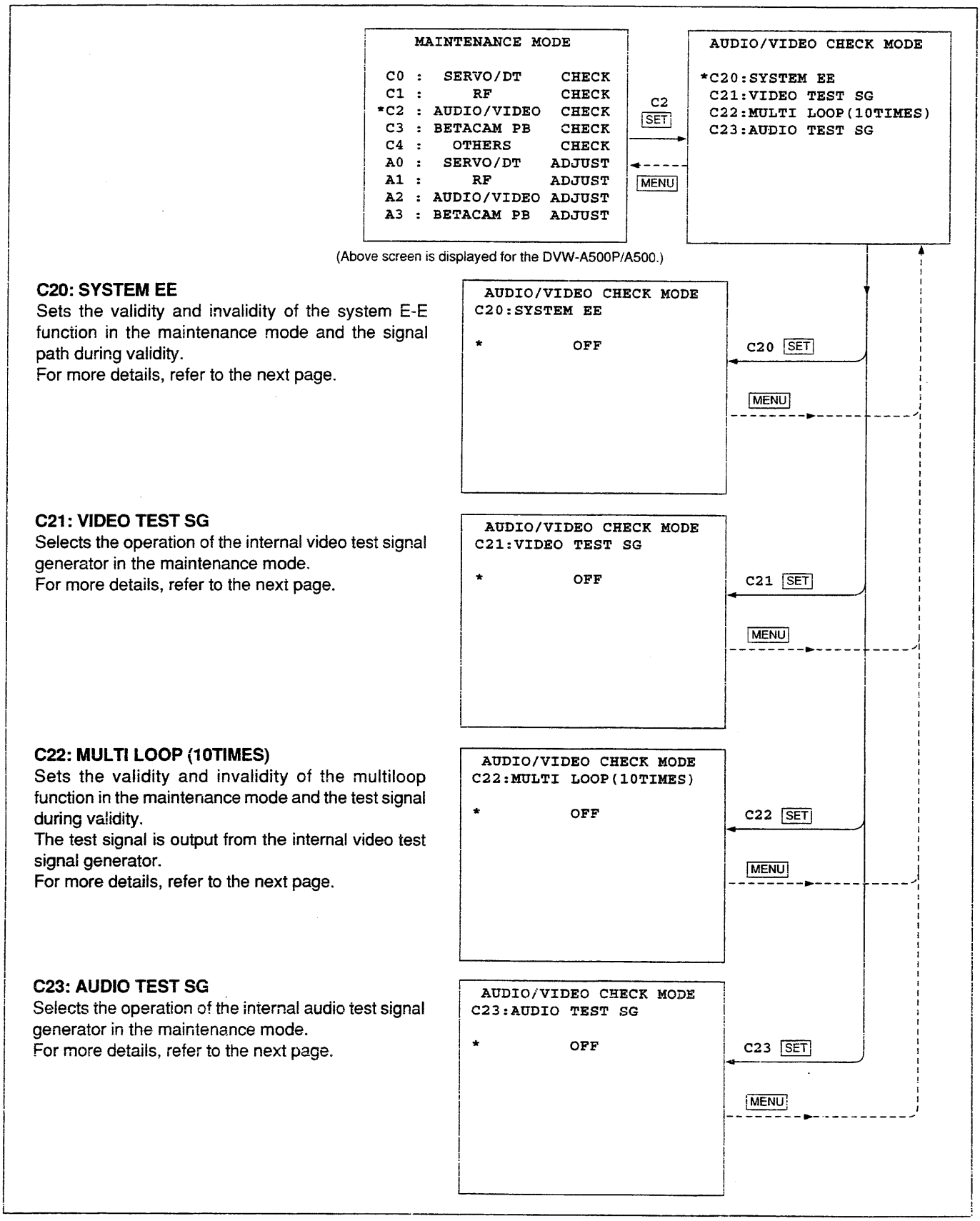

(Above screen is displayed for the DVW-A500P/A500.)

C20: SYSTEM EE
Sets the validity and invalidity of the system E-E function in the maintenance mode and the signal path during validity.
For more details, refer to the next page.

C21: VIDEO TEST SG
Selects the operation of the internal video test signal generator in the maintenance mode.
For more details, refer to the next page.

C22: MULTI LOOP (10TIMES)
Sets the validity and invalidity of the multiloop function in the maintenance mode and the test signal during validity.
The test signal is output from the internal video test signal generator.
For more details, refer to the next page.

C23: AUDIO TEST SG
Selects the operation of the internal audio test signal generator in the maintenance mode.
For more details, refer to the next page.

a) C20: SYSTEM EE

This mode selects Bypass E-E in the normal operation or System E-E in the maintenance mode execution.
There are three types of signal path in System E-E.

OFF: Normal state (Bypass E-E, not System E-E)
DPR: System E-E that returns the video/audio signal after digital process on the DPR board.
RF1: System E-E with the video/audio signal returned in the input interface IC103 on the EQ board, and sent to DPR board.
RF2: System E-E returns the video/audio signal after passing EQ circuit except head.

Selection method

To display the desire setting, turn the search dial while pressing the JOG (or SHUTTLE) button. The system E-E state specified in this case is maintained until the maintenance mode is terminated or until this setting is changed.

b) C21: VIDEO TEST SG

This mode selects the operation of the internal video test signal generator in the maintenance mode. However, this selection is disabled when a multiloop function is enabled.

OFF: Stops the operation of the video test signal generator.
Except OFF (mentioned below):
Outputs a selected signal from the video test signal generator.

100% color bars
75% color bars
75% reverse color bars
Bowtie
Pulse and bar
Multi burst
H sweep
5-step
Ramp
Shallow ramp
Red signal
50% flat
100% flat
Black burst
Pathological check code
Line 330 (625)- - - - - - - - - - - DVW-A500P/500P only
NTC7 (NTSC)- - - - - - - - - - - DVW-A500/500 only

Selection method

To display the desire setting, turn the search dial while pressing the JOG (or SHUTTLE) button. The test signal specified in this case is continuously output from a video test signal generator until the maintenance mode is terminated or until this setting is changed.

This signal can also be recorded on the tape.

c) C22: MULTI LOOP (10 TIMES)

This mode selects validity and invalidity of the multiloop function during maintenance mode execution and the test signal during validity. The test signal that can be selected is output from the internal video test signal generator. It is the same in type as "C21: VIDEO TEST SG".

OFF: Normal state (Performs no multiloop.)
Except OFF:
Outputs the selected signal from the video test signal generator irrespective of the setting in "C21: VIDEO TEST SG" and performs the multiloop operation.

Selection method

To display the desire setting, turn the search dial while pressing the JOG (or SHUTTLE) button. A multiloop is performed using the test signal specified in this case until the maintenance mode is terminated or until this setting is changed.

d) C23: AUDIO TEST SG

This mode selects the operation of the internal audio test signal generator in the maintenance mode.

OFF: Stops the operation of the audio test signal generator.
Except OFF (mentioned below):
Outputs the selected signal from the audio test signal generator.

SILENCE
1 kHz sine 0 VU
1 kHz sine burst/1-field
1 kHz sine burst/2-field
1 kHz sine burst/5-field
1 kHz sine burst/8-field
1 kHz sine burst (10)
4 kHz sine burst (40)
SAW(sawtooth) wave

Selection method

To display the desire setting, turn the search dial while pressing the JOG (or SHUTTLE) button. The test signal specified in this case is continuously output from the audio test signal generator until the maintenance mode is terminated or until this setting is changed.

This signal can also be recorded on the tape.

5-5. BETACAM PB SYSTEM CHECK MODE (For DVW-A500P/A500) (C3: BETACAM PB CHECK)

This mode can check the Betacam PB system.
For how to activate and terminate the maintenance mode, refer to page 5-3.

Exclusive mode for the DVW-A500P/A500

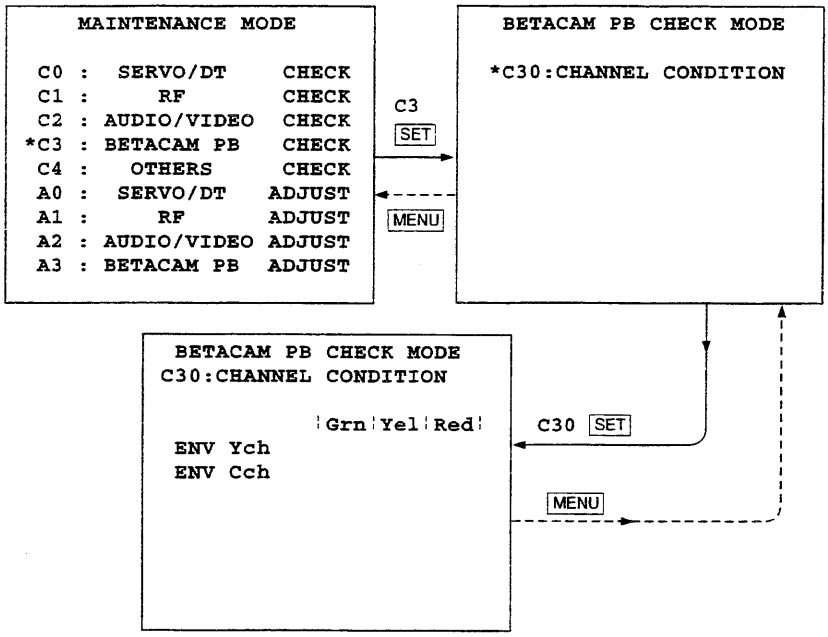

C30: CHANNEL CONDITION
Can display the error condition in Betacam PB video channels (Y and C) in units of three stages on the monitor screen.
For more details, refer to next page.

5-5. BETACAM PB SYSTEM CHECK MODE (For DVW-A500P/A500)

a) C30: CHANNEL CONDITION

This mode can display the error condition in Betacam PB video channels (Y and C) in units of three stages on the monitor screen.

The channel condition indicator on the upper control panel indicates the bad channel state of the error condition.

(1) Press the SET button (or switch S300 on the SS board) on the screen at right. At that time, the unit temporarily exits the maintenance mode. This enables the normal operation.
(Prompt "■" is displayed in the upper right position of the superimposed screen, and the time counter is put into the normal state.)

```
 BETACAM PB CHECK MODE
C30:CHANNEL CONDITION

            ¦Grn¦Yel¦Red¦
 ENV Ych
 ENV Cch
```

(1) SET or S300
(2) Insert a Betacam tape
(3) PLAY

(2) Insert the recorded Betacam cassette tape.

(3) Press the PLAY button.
The ">>>" display then appears on the monitor screen.

Confirm that the ">>>" display appears in the "Grn" position in both channels.

```
 BETACAM PB CHECK MODE ■
C30:CHANNEL CONDITION

            ¦Grn¦Yel¦Red¦
 ENV Ych     >>>
 ENV Cch     >>>
```

(4) EJECT
MENU or S301

(4) To terminate the operation, stop the tape running and eject the cassette tape. (The ">>>" display disappears.)
Press the MENU button (or switch S301 on the SS board) to return to the maintenance mode.
(The "■" display disappears on the monitor screen, and the time counter displays menu number C30.)

```
 BETACAM PB CHECK MODE
C30:CHANNEL CONDITION

            ¦Grn¦Yel¦Red¦
 ENV Ych
 ENV Cch
```

When the ">>>" display appears in positions other than "Grn", clean the drum (rotary heads).
(a) Cleaning by the cleaning tape (Refer to Section 1-11-1.)
∗Cleaning time is five seconds.
(b) Cleaning by the cleaning cloth (Refer to Section 1-11-2.)
If the channel condition is not improved after performing the step (a) and (b), there is a possibility to improve the situation by use of cleaning tape repeatedly.
It should be less than 4 times of 5 seconds cleaning in total.
If the channel condition is not improved in the way mentioned above, the possible causes below are considered.

```
 BETACAM PB CHECK MODE ■
C30:CHANNEL CONDITION

            ¦Grn¦Yel¦Red¦
 ENV Ych     >>>
 ENV Cch         >>>
```

Playback tape fault:
- The tape is damaged.
- The recording state is bad.

Main unit faults:
- Tape running system adjustment defect/part installation defect
- RF system adjustment defect
- DT system adjustment defect
- Worn head
- Harness defect
- Brush/Slip ring defect
- Circuit defect

5-6. OTHERS CHECK MODE

5-6. OTHERS CHECK MODE (C4: OTHERS CHECK)

This section describes the "C4: OTHERS CHECK" mode.
For how to activate and terminate the maintenance mode, refer to page 5-3.

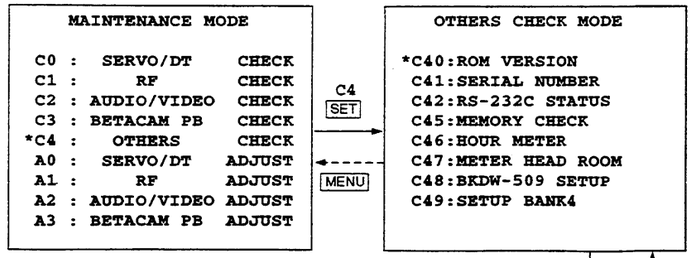

(Above screen is displayed for the DVW-A500P/A500.)

The C41 and C42 modes are applied on the unit in which the three version numbers of SYS1 ROM(IC12), SV1 ROM(IC761), and DT ROM(IC211/IC2110) on the SS board are 2.00 or higher.

The C48:BKDW-509 SETUP menu is applied on the unit in which the version No. of both SYS1 ROM (IC12) and SYS2 ROM (IC54) on the SS board are 1.10 or higher. And this menu is not displayed when the BKDW-509 is not installed.

The C49:SETUP BANK4 mode is applied on the unit in which the version No. of both SYS1 ROM (IC12) and SYS2 ROM (IC54) on the SS board are 3.10 or higher.

C40: ROM VERSION

Displays the ROM version that exists in this unit.
Also displays the installed option.
For more details, refer to page 5-37.

The screen at right is displayed when optional BKDW-506 and BKDW-509 are installed in the DVW-A500P. The version value is one example.

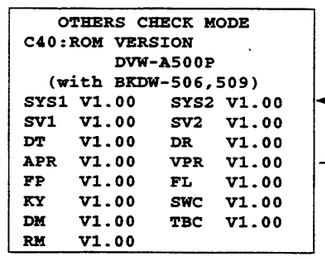

C40 SET

MENU

C48/C49

C41: SERIAL NUMBER

ISR use

Displays/sets the serial number. This is setting requisite for the ISR.
For more details, refer to page 5-37.

The number in the right figure is one example.

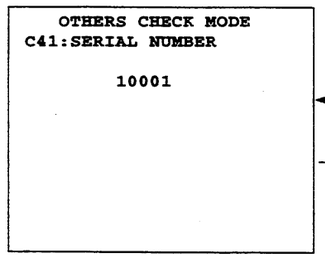

C41 SET

MENU

C42: RS-232C STATUS

ISR use

Displays the RS-232C port status, and sets the baud rate and flow control requisite for the ISR.
For more details, refer to page 5-38.

The status in the right figure is one example.

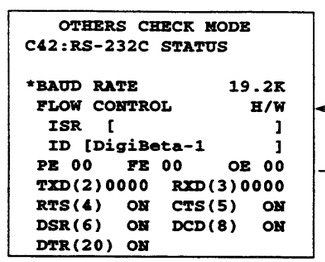

C42 SET

MENU

ISR; Interactive Status Reporting system

The ISR system can perform the operation monitoring and self-diagnosis check of each broadcast equipment by using the personal computer installed the ISR application software Sony BZI-500/501.

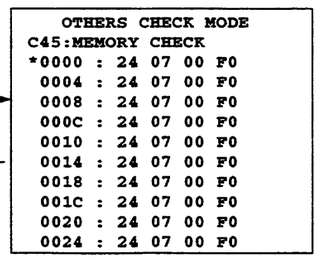

C45 SET

MENU

C45: MEMORY CHECK

Factory use

Displays the data in the RAM that exists in this unit.
For more details, refer to page 5-38.

The data value in the figure at left is one example.

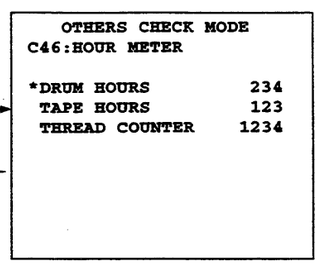

C46 SET

MENU

C46: HOUR METER

Can display and reset the resetable hours meter and thread counter of this unit.
For more details, refer to page 5-38.

The data value in the figure at left is one example.

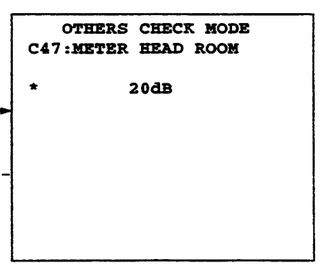

C47 SET

MENU

C47: METER HEAD ROOM

Sets the head room of the audio level meter.
For more details, refer to page 5-38.

5-36

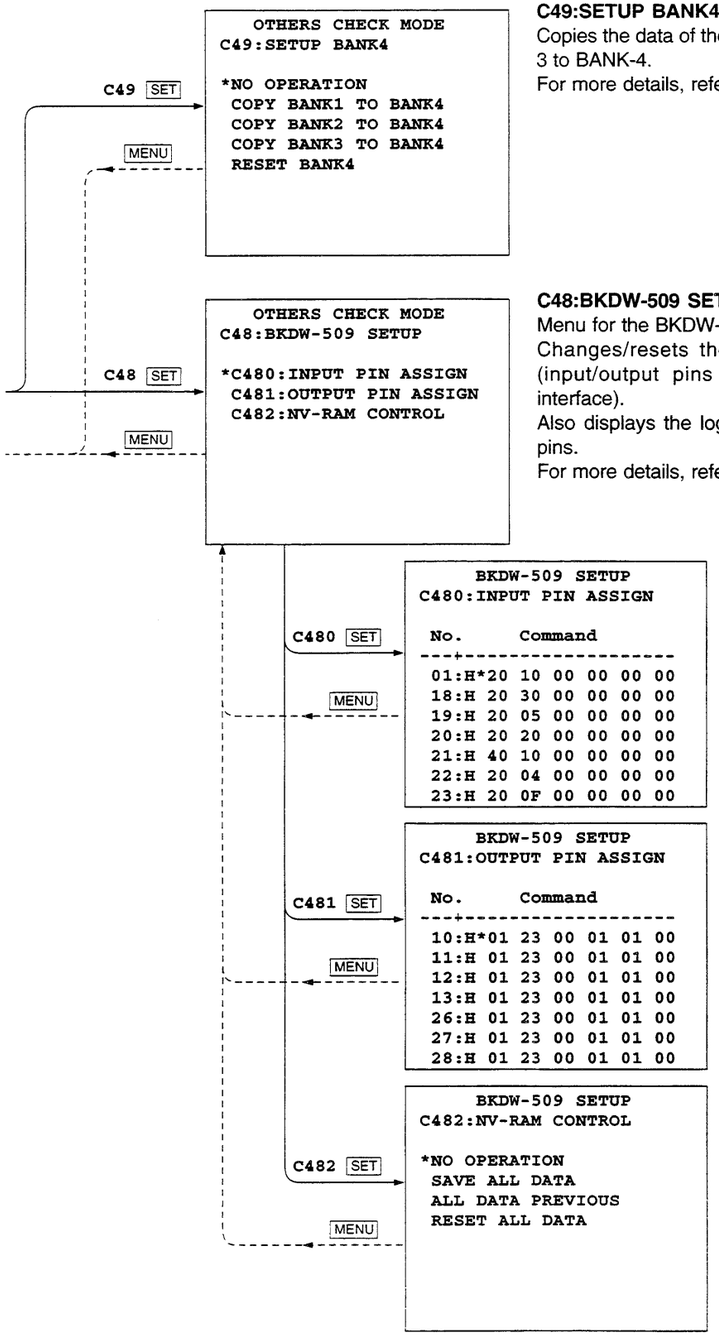

C49:SETUP BANK4
Copies the data of the setup menu BANK-1, 2, or 3 to BANK-4.
For more details, refer to page 5-40.

C48:BKDW-509 SETUP
Menu for the BKDW-509 (optional equipment).
Changes/resets the BKDW-509 setup data (input/output pins function of the parallel interface).
Also displays the logic level of the input/output pins.
For more details, refer to page 5-39.

C480: INPUT PIN ASSIGN
Changes the setup data (input pins function).
Also displays the logic level of the input pins.
The data value and the logic level in the figure at left is one example.

C481: OUTPUT PIN ASSIGN
Changes the setup data (output pins function).
Also displays the logic level of the output pins.
The data value and the logic level in the figure at left is one example.

C482: NV-RAM CONTROL
Saves the BKDW-509 setup data in an NV-RAM, returns it to the previous state without saving, or resets it to the factory data.

a) C40: ROM VERSION

This mode displays the version of the ROM (including the ROM in a microprocessor) that exists in this unit. It also displays the installed option (BKDW-).

The screen at right is displayed when both an analog composite decoder board (BKDW-506) and parallel (50-pin) interface board (BKDW-509) are installed in the DVW-A500P.

The display description is shown below.

```
OTHERS CHECK MODE
C40:ROM VERSION
        DVW-A500P
  (with BKDW-506,509)
SYS1 V1.00   SYS2 V1.00
SV1  V1.00   SV2  V1.00
DT   V1.00   DR   V1.00
APR  V1.00   VPR  V1.00
FP   V1.00   FL   V1.00
KY   V1.00   SWC  V1.00
DM   V1.00   TBC  V1.00
RM   V1.00
```

This version value is one example.

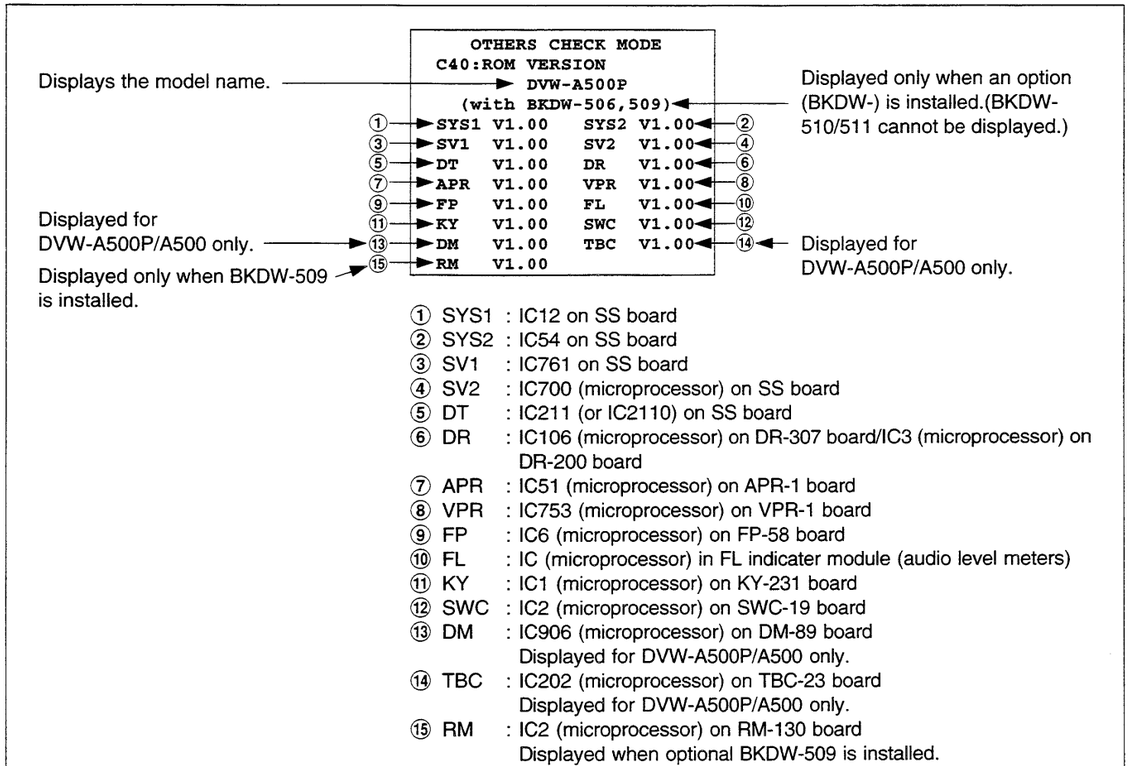

① SYS1 : IC12 on SS board
② SYS2 : IC54 on SS board
③ SV1 : IC761 on SS board
④ SV2 : IC700 (microprocessor) on SS board
⑤ DT : IC211 (or IC2110) on SS board
⑥ DR : IC106 (microprocessor) on DR-307 board/IC3 (microprocessor) on DR-200 board
⑦ APR : IC51 (microprocessor) on APR-1 board
⑧ VPR : IC753 (microprocessor) on VPR-1 board
⑨ FP : IC6 (microprocessor) on FP-58 board
⑩ FL : IC (microprocessor) in FL indicater module (audio level meters)
⑪ KY : IC1 (microprocessor) on KY-231 board
⑫ SWC : IC2 (microprocessor) on SWC-19 board
⑬ DM : IC906 (microprocessor) on DM-89 board
Displayed for DVW-A500P/A500 only.
⑭ TBC : IC202 (microprocessor) on TBC-23 board
Displayed for DVW-A500P/A500 only.
⑮ RM : IC2 (microprocessor) on RM-130 board
Displayed when optional BKDW-509 is installed.

b) C41: SERIAL NUMBER

ISR use

Displays/sets the serial number. This is setting requisite for the ISR.
Setting performs at each digit. (Blinking a digit can change.)
Displays " ----- " when the serial number is not set.

Setting

(1) Trun the search dial(JOG mode) to blinking digit.
(2) Trun the search dial while pressing the JOG button to display the desire number.
(3) For other digits to be set, repeat steps (1) and (2).
(4) Press the SET button (or switch S300 on the SS board). Setting is then completed.

```
OTHERS CHECK MODE
C41:SERIAL NUMBER

10001
```

Above screen is one example.

c) C42: RS-232C STATUS

ISR use

Displays the RS-232C port status, and sets the baud rate and flow control requisite for the ISR.

```
   OTHERS CHECK MODE
C42:RS-232C STATUS

*BAUD RATE          19.2K
 FLOW CONTROL        H/W
  ISR  [               ]
  ID [DigiBeta-1       ]
 PE 00   FE 00    OE 00
 TXD(2)0000  RXD(3)0000
 RTS(4)  ON  CTS(5)  ON
 DSR(6)  ON  DCD(8)  ON
 DTR(20) ON
```

Above screen is one example.

Setting (Baud rate or Flow control)

(1) Align "*" mark with the item to be set using the search dial(JOG mode).
(2) To display the desire setting, trun the search dial while pressing the JOG button.
(3) Press the SET button (or switch S300 on the SS board). Setting is then completed.

The display description is shown below.

```
   OTHERS CHECK MODE
C42:RS-232C STATUS

*BAUD RATE          19.2K  ◄─①
 FLOW CONTROL        H/W   ◄─②
  ISR  [               ]   ◄─③
  ID [DigiBeta-1       ]   ◄─④
 PE 00   FE 00    OE 00    ◄─⑤
 TXD(2)0000  RXD(3)0000
 RTS(4)  ON  CTS(5)  ON    ◄─⑥
 DSR(6)  ON  DCD(8)  ON
 DTR(20) ON
```

① Selects the buad rate from the followings.
1200, 2400, 4800, 9600, 19.2K (bps)

② Selects/changes the flow control of transmitting side from the followings.
H/W ; Hardware control
XOFF ; XON/XOFF control
H/W,XOFF ; Both the hardware and XON/XOFF

③ Protcol state indication

```
ISR x[yyyy...........]
```

- Displays last correctly recieving command (Displays former recieving command till ACK transmitting is completed.)
- Displays the protcol status of the unit.
  A ; on ACK transmission
  N ; on NAK transmission
  T ; on ATN (OPC or QRESP) transmission
  W ; waiting for ACK
  X ; XOFF received, waiting for XON

④ Device ID is desplayed a name that sets by DEVID command of ISR protocol. Even if the power is turned off, this device ID is kept till it changes by DEVID command.

⑤ Displays the number of the parity error (PE), framing error (FE), and overrun error (OE) of receiving data.

⑥ The number with ( ) indicates the pin number of RS-232C connector.
The four figures (hexadecimal) at TXD or RXD indicates the number of correctly transmitting or recieving data (byte).
Other items indicates the pin state with ON(> +3 V) or OFF(< –3 V).
When RS-232C port connects with computer &c., normally turns all ON.
When not connected, the state of input pins (CTS, DSR, DCD) are undefined.

d) C45: MEMORY CHECK

This mode displays the data in the ROM that exists in this unit (in hexadecimals).

Move the "*" mark upward or downward using a search dial (JOG mode).
The address and data display areas are then scrolled.

Factory use

```
   OTHERS CHECK MODE
C45:MEMORY CHECK
*0000 : 24 07 00 F0
 0004 : 24 07 00 F0
 0008 : 24 07 00 F0
 000C : 24 07 00 F0
 0010 : 24 07 00 F0
 0014 : 24 07 00 F0
 0018 : 24 07 00 F0
 001C : 24 07 00 F0
 0020 : 24 07 00 F0
 0024 : 24 07 00 F0
```

This data value is one example.

e) C46: HOUR METER

This mode can display and reset the resetable hours meter and thread counter of this unit.

```
   OTHERS CHECK MODE
C46:HOUR METER

*DRUM HOURS          234
 TAPE HOURS          123
 THREAD COUNTER     1234
```

This value is one example.

Display description

DRUM HOURS : Drum rotation time
TAPE HOURS : Tape running time
THREAD COUNTER : Number of threading times

Resetting

(1) Align the "*" mark with the item to be reset using a search dial (JOG mode).
(2) Turn the search dial in the reverse direction while pressing the JOG (or SHUTTLE) button. The display value then becomes zero ("0").
To return the display value to the former value after that, turn the search dial in the forward direction.
(3) For other items to be reset, repeat steps (1) and (2).
(4) Press the SET button (or switch S300 on the SS board). Resetting is then completed.

f) C47: METER HEAD ROOM

This mode selects the head room of the audio level meter from the following.
20 dB, 18 dB, 16 dB, 15 dB*1, 14 dB, 12 dB, 9 dB*1-----when DVW-A500P/500P
20 dB, 18 dB, 16 dB, 14 dB, 12 dB----------when DVW-A500/500

```
   OTHERS CHECK MODE
C47:METER HEAD ROOM

*          20dB
```

Selection method

(1) To display the desire setting, turn the search dial while pressing the JOG (or SHUTTLE) button.
(2) Press the SET button (or switch S300 or the SS board). Setting is then completed.

*1; These head rooms are added to the unit in which the APR microprocessor (IC753 on the APR board) version is 1.04 or higher, and FL microprocessor (in audio level meter) version is 1.01.

g) C48 : BKDW-509 SETUP

This menu changes/resets the BKDW-509 setup data (input/output pins function of the parallel interface). Also displays the logic level of the input/output pins.
This menu is not displayed when the BKDW-509 is not installed.

The C480 mode changes the setup data of the input pins function, and displays the logic level of it.
The C481 mode changes the setup data of the output pins function, and displays the logic level of it.
The C482 mode saves the setup data in an NV-RAM, returns it to the previous state without saving, or resets it to the factory data.

The C48 menu is applied on the unit in which the version No. of both SYS1 ROM (IC12) and SYS2 ROM (IC54) on the SS board are 1.10 or higher.
(The BKDW-509 does not operate when the above two ROM's version No. are each less than 1.10. To operate the version-up of the two ROMs is required.)

```
   OTHERS CHECK MODE
C48:BKDW-509 SETUP

*C480:INPUT PIN ASSIGN
 C481:OUTPUT PIN ASSIGN
 C482:NV-RAM CONTROL
```

DIAL
[SET] or [S300]

(The monitor screen is displayed as an example of "C480 : INPUT PIN ASSIGN". The displayed data value and logic level are an example.)

Display Description
The pin numbers are displayed at the column of "No.".
Also the right at the pin number is displayed the logic level state (H;high, L;low).
The monitor screen is scrolled and displayed.

```
     BKDW-509 SETUP
C480:INPUT PIN ASSIGN

 No.      Command
---+-------------------
 01:H*20 10 00 00 00 00
 18:H 20 30 00 00 00 00
 19:H 20 05 00 00 00 00
 20:H 20 20 00 00 00 00
 21:H 40 10 00 00 00 00
 22:H 20 04 00 00 00 00
 23:H 20 0F 00 00 00 00
```

(1) DIAL

Operation during data changing
(1) Set "*" mark to the left of data to be adjusted using a search dial (JOG mode).

```
     BKDW-509 SETUP
C480:INPUT PIN ASSIGN

 No.      Command
---+-------------------
 01:H 20 10 00 00 00 00
 18:H 20*30 00 00 00 00
 19:H 20 05 00 00 00 00
 20:H 20 20 00 00 00 00
 21:H 40 10 00 00 00 00
 22:H 20 04 00 00 00 00
 23:H 20 0F 00 00 00 00
```

(2) [JOG] + DIAL

(2) Turn the search dial to change the data while pressing the JOG (or SHUTTLE) button.

FWD (↻): Increases the data value.
REV (↺): Decreases the data value.

```
     BKDW-509 SETUP
C480:INPUT PIN ASSIGN

 No.      Command
---+-------------------
 01:H 20 10 00 00 00 00
 18:H 20*50 00 00 00 00
 19:H 20 05 00 00 00 00
 20:H 20 20 00 00 00 00
 21:H 40 10 00 00 00 00
 22:H 20 04 00 00 00 00
 23:H 20 0F 00 00 00 00
```

(3) For any other data, repeat steps (1) and (2).

(4) After change is completed, press the MENU button (or switch S301 on the SS board) to return to the BKDW-509 SETUP menu screen.

(4) [MENU] or [S301]

(5) To save the adjustment data in an NV-RAM, execute the "C482: NV-RAM CONTROL" mode.

```
*C482:NV-RAM CONTROL
```


5-6. OTHERS CHECK MODE

Caution

> If to change the setup data, and/or the version-up of the ROMs, please contact to Sony's service organization.

Do not change the setup data carelessly. This causes a trouble.
If the adjustment data been changed carelessly, execute the "ALL DATA PREVIOUS" mode in C482 : NV-RAM CONTROL or turn off the power of this unit without executing the C482 : NV-RAM CONTROL.
Never execute the "SAVE ALL DATA" mode.

C482 : NV-RAM CONTROL

Caution : Once the BKDW-509 setup data is saved in an NV-RAM, it cannot return to the previous state.

(1) Using a serch dial (JOG mode), set the "*" mark as follows;
Set it to "SAVE ALL DATA" when the setup data after change is saved.
Set it to "ALL DATA PREVIOUS" when the setup data before change is returned.
Set it into "RESET ALL DATA" when the setup data resets to the factory data.

```
     BKDW-509 SETUP
C482:NV-RAM CONTROL

*NO OPERATION
 SAVE ALL DATA
 ALL DATA PREVIOUS
 RESET ALL DATA
```

(1) DIAL
(2) [SET] or [S300]

(2) Press the SET button (or switch S300 on the SS board) to initiate the data transfer.

The monitor screen at right is displayed when the setup data is saved/reseted.
The "Loading ..." message is displayed when the setup data before change is returned.

```
     BKDW-509 SETUP
C482:NV-RAM CONTROL

 Saving ...
```

During data saving

(3) After data transfer is completed, the "Complete" message is displayed on the monitor screen.
The monitor screen at right is displayed when the setup data is saved/reseted.
The "Load Complete" message is displayed when the setup data befor adjustment is returned.

```
     BKDW-509 SETUP
C482:NV-RAM CONTROL

 Save Complete
```

Data saving completed

Note : If the power of this unit is turned off without saving the BKDW-509 setup data in an NV-RAM after change is completed, the setup data returns to the previous state.

5-6. OTHERS CHECK MODE

C49: SETUP BANK4

This mode copies into the setup menu BANK-4 from BANK-1, 2, or 3, or resets it to the factory data.

The C49 mode is applied on the unit in which the version No. of both SYS1 ROM (IC12) and SYS2 ROM (IC54) on the SS board are 3.10 or higher.

(1) Using a serch dial (JOG mode), set the "*" mark as follows;
Set it to "COPY BANK1 TO BANK4" when the BANK-1 data is copied into the BANK-4.
Set it to "COPY BANK2 TO BANK4" when the BANK-2 data is copied into the BANK-4.
Set it to "COPY BANK3 TO BANK4" when the BANK-3 data is copied into the BANK-4.
Set it into "RESET BANK4" when the BANK-4 data resets to the factory data.

(2) Press the SET button (or switch S300 on the SS board) to initiate the data transfer.

(3) After data transfer is completed, the "Save Complete" message is displayed on the monitor screen.

```
   OTHERS CHECK MODE
C49:SETUP BANK4

*NO OPERATION
 COPY BANK1 TO BANK4
 COPY BANK2 TO BANK4
 COPY BANK3 TO BANK4
 RESET BANK4
```

(1) DIAL
(2) [SET] or [S300]

```
   OTHERS CHECK MODE
C49:SETUP BANK4

 Saving ...
```

During data saving

```
   OTHERS CHECK MODE
C49:SETUP BANK4

 Save Complete
```

Data saving completed

5-7. SERVO/DT SYSTEM ADJUSTMENT MODE

5-7. SERVO/DT SYSTEM ADJUSTMENT MODE (A0: SERVO/DT ADJUST)

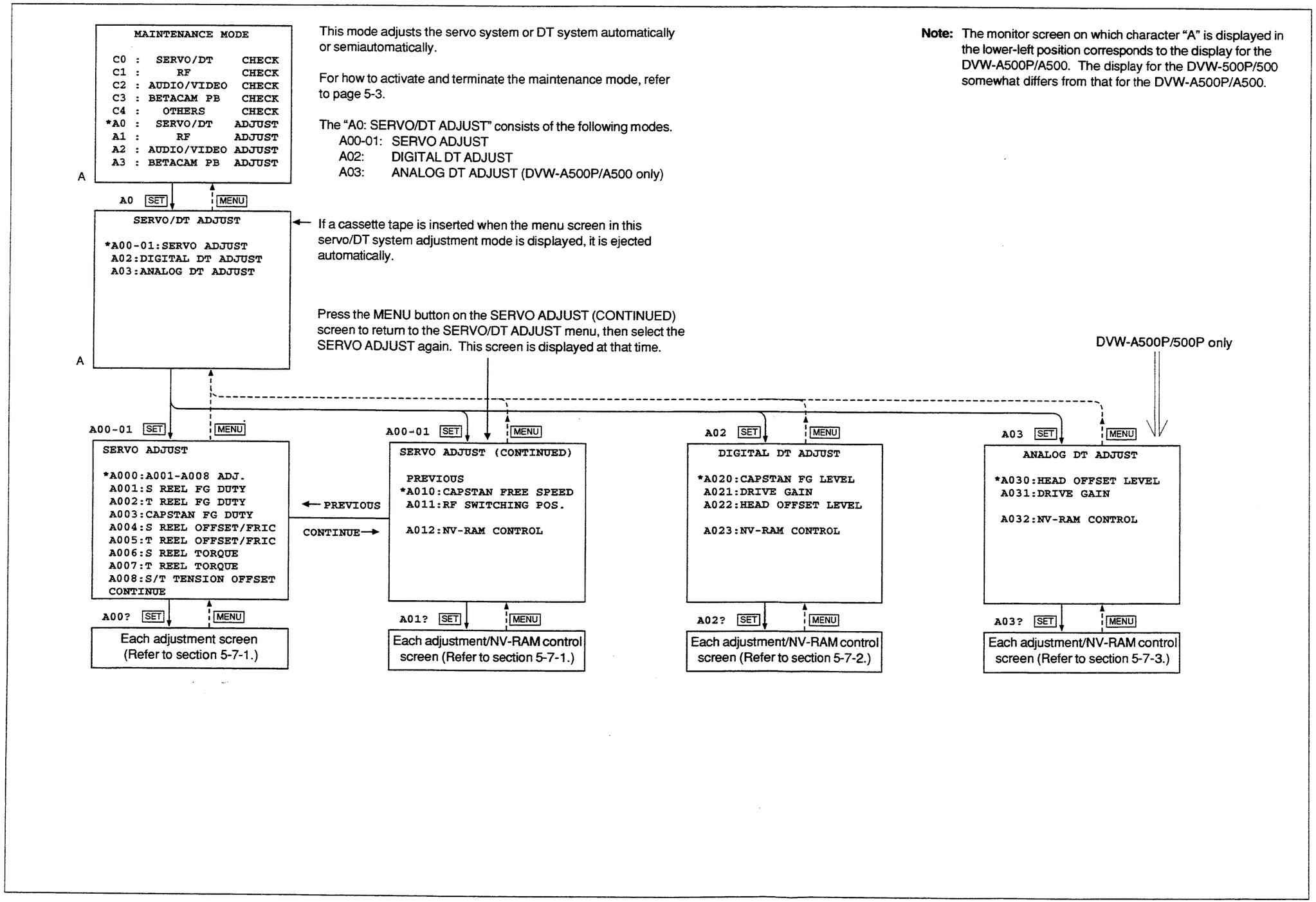

5-41

5-7-1. Servo System Adjustment Mode

5-7-1. Servo System Adjustment Mode (A00-01: SERVO ADJUST)

This section describes the "A00-01: SERVO ADJUST" mode.

A000: A001-A008 ADJ.
Automatically executes the adjustment menu in A001 through A008.
For more details, refer to page 5-44.

A001: S REEL FG DUTY
Adjusts the S reel FG duty cycle.
For more details, refer to page 5-45.

A002: T REEL FG DUTY
Adjusts the T reel FG duty cycle.
For more details, refer to page 5-45.

A003: CAPSTAN FG DUTY
Adjusts the capstan FG duty cycle.
For more details, refer to page 5-45.

A004: S REEL OFFSET/FRICTION
Adjusts the S reel offset and friction.
For more details, refer to page 5-46.

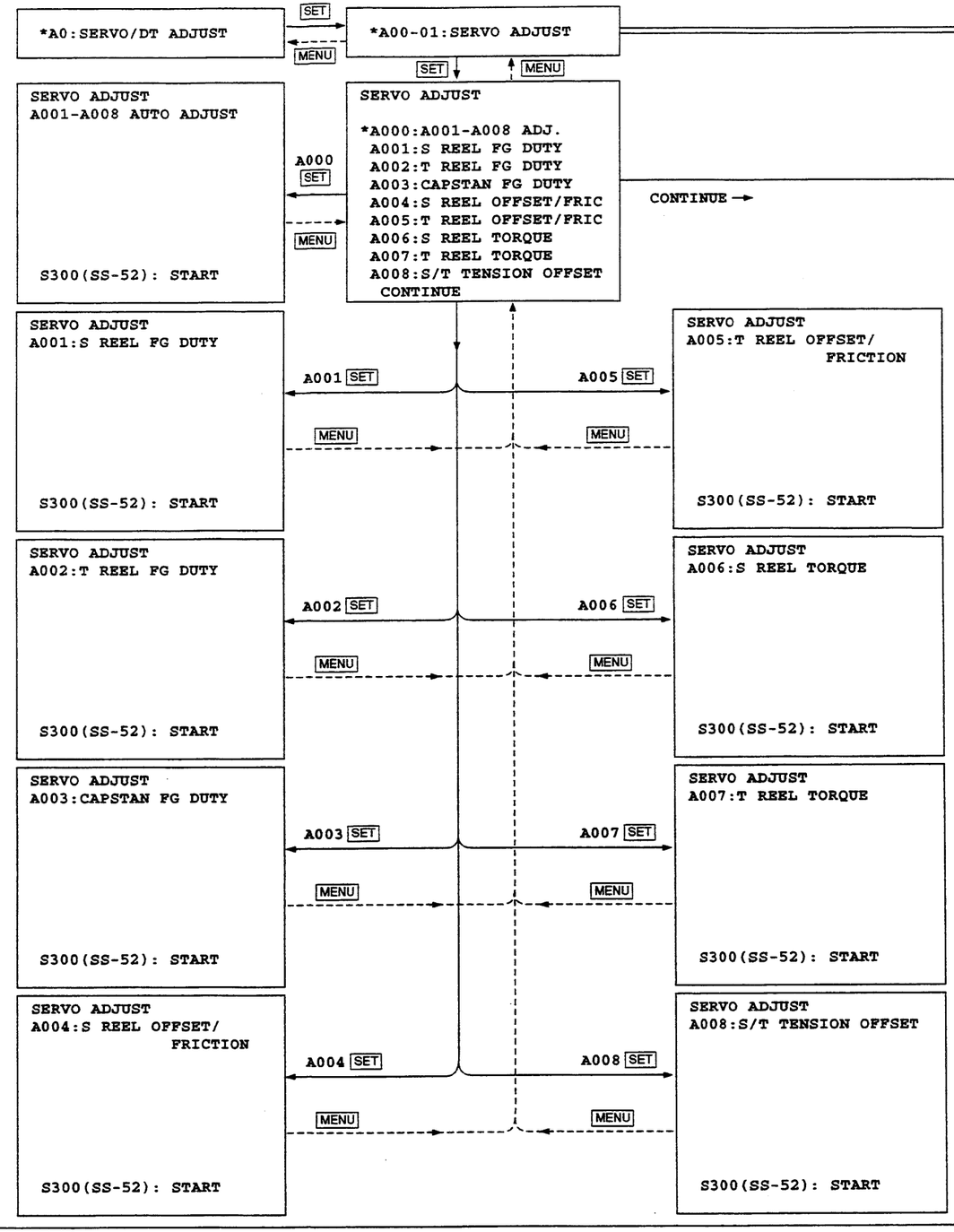

A005: T REEL OFFSET/FRICTION
Adjusts the T reel offset and friction.
For more details, refer to page 5-46.

A006: S REEL TORQUE
Adjusts the S reel torque.
For more details, refer to page 5-47.

A007: T REEL TORQUE
Adjusts the T reel torque.
For more details, refer to page 5-47.

A008: S/T TENSION OFFSET
Adjusts the offset of an S/T tension regulator.
For more details, refer to page 5-47.

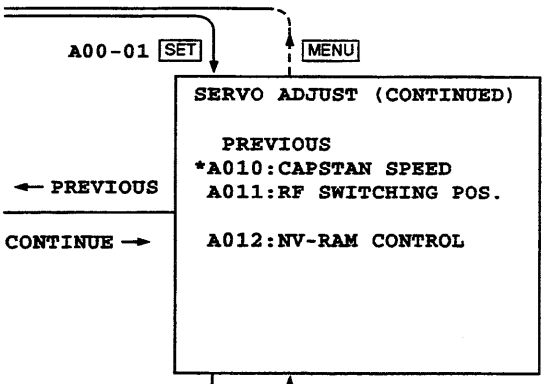

Press the MENU button on the SERVO ADJUST (CONTINUED) screen to return to the SERVO/DT ADJUST menu, then select the A00-01: SERVO ADJUST again. This screen at left is displayed at that time.

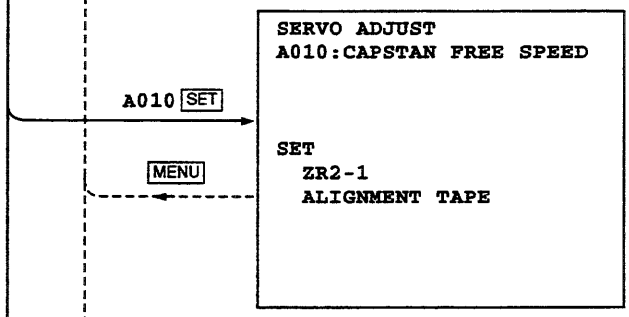

A010: CAPSTAN FREE SPEED
Adjusts the free speed of a capstan motor.
For more details, refer to page 5-49.

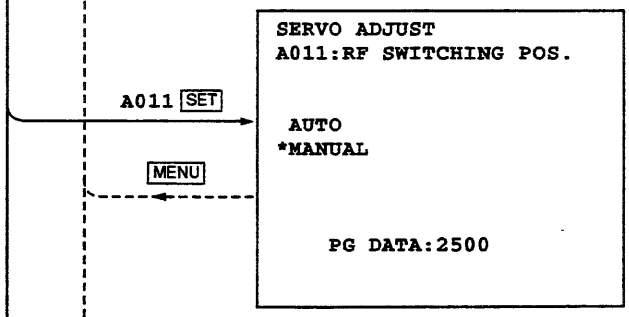

A011: RF SWITCHING POS.
Adjusts the RF switching position.
For more details, refer to page 5-49.
(Only the automatic adjustment operation is described in this case.)

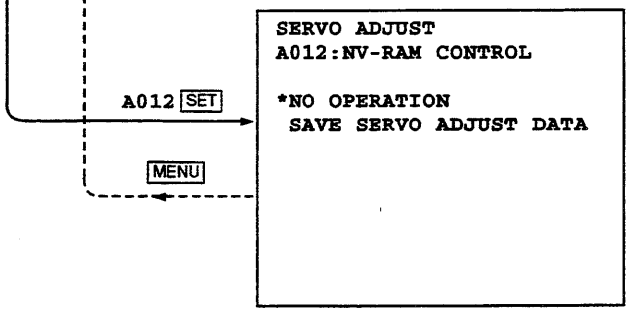

A012: NV-RAM CONTROL
Saves the servo system adjustment data in an NV-RAM.
For more details, refer to page 5-52.

a) A000: A001-A008 ADJ.

This mode executes the adjustment menus below automatically and continuously.

A001: S REEL FG DUTY
A002: T REEL FG DUTY
A003: CAPSTAN FG DUTY
A004: S REEL OFFSET/FRICTION
A005: T REEL OFFSET/FRICTION
A006: S REEL TORQUE
A007: T REEL TORQUE
A008: S/T TENSION OFFSET

```
SERVO ADJUST
A001-A008 AUTO ADJUST

S300(SS-52): START
```

(1) SET or S300

(1) Press the SET button (or switch S300 on the SS board) to initiate the adjustment.

The "A001: S REEL FG DUTY" adjustment is performed first.
The "ADJUSTING....." message is displayed during adjustment.

As the adjustment progresses, the display in the fifth line (※) changes.

```
SERVO ADJUST
A001-A008 AUTO ADJUST

(※) A001:S REEL FG DUTY

    ADJUSTING.....
```

During adjustment

(2) If no abnormality is found after all the adjustments are completed, the "ADJUST COMPLETE" message is displayed on the monitor screen.

```
SERVO ADJUST
A001-A008 AUTO ADJUST

    ADJUST COMPLETE
```

Adjustment completed

(3) MENU or S301

(3) Press the MENU button (or switch S301 on the SS board) to return to the SERVO ADJUST menu screen.

(4) To save the adjustment data in an NV-RAM, execute the "A012: NV-RAM CONTROL" mode.

```
*A012:NV-RAM CONTROL
```

In case of NG; (The screen at right is one example.)
When the "ADJUST INCOMPLETE" message is displayed on the monitor screen.
Refer to the "In case of NG" in each adjustment menu.

```
SERVO ADJUST
A001-A008 AUTO ADJUST

A005:T REEL OFFSET/
                FRICTION
# ADJUST INCOMPLETE #
```

Adjustment NG

b) A001: S REEL FG DUTY
A002: T REEL FG DUTY
A003: CAPSTAN FG DUTY

A001: Adjusts the S reel FG duty cycle.
A002: Adjusts the T reel FG duty cycle.
A003: Adjusts the capstan FG duty cycle.

These operation methods are the same as one another. The monitor screen at right is displayed for "A001: S REEL FG DUTY".

```
SERVO ADJUST
A001:S REEL FG DUTY

S300(SS-52): START
```

(1) SET or S300

(1) Press the SET button (or switch S300 on the SS board) to initiate the adjustment.

During adjustment, the "ADJUSTING....." message is displayed on the monitor screen.

```
SERVO ADJUST
A001:S REEL FG DUTY

ADJUSTING.....
```

During adjustment

(2) After adjustment is completed, the "ADJUST COMPLETE" message is displayed on the monitor screen.

```
SERVO ADJUST
A001:S REEL FG DUTY

ADJUST COMPLETE
```

Adjustment completed

(3) MENU or S301

(3) Press the MENU button (or switch S301 on the SS board) to return to the SERVO ADJUST menu screen.

(4) To save the adjustment data in an NV-RAM, execute the "A012: NV-RAM CONTROL" mode.

```
*A012:NV-RAM CONTROL
```

In case of NG;
When the "ADJUST INCOMPLETE" message is displayed on the monitor screen, perform the following checks.

- For "A001: S REEL FG DUTY", check the S reel FG amplifier circuit and S reel motor driver circuit on the DR-307/200 board.
- For "A002: T REEL FG DUTY", check the T reel FG amplifier circuit and T reel motor driver circuit on the DR-307/200 board.
- For "A003: CAPSTAN FG DUTY", check the capstan FG amplifier circuit and capstan motor driver circuit on the DR-307/200 board.

```
SERVO ADJUST
A001:S REEL FG DUTY

# ADJUST INCOMPLETE #
```

Adjustment NG

c) A004: S REEL OFFSET/FRICTION
A005: T REEL OFFSET/FRICTION

A004: Adjusts the S reel offset and friction.
A005: Adjusts the T reel offset and friction.

These operation methods are the same as each other. The monitor screen at right is displayed for "A004: S REEL OFFSET/FRICTION".

```
SERVO ADJUST
A004:S REEL OFFSET/
              FRICTION

 S300(SS-52): START
```

(1) SET or S300

(1) Press the SET button (or switch S300 on the SS board) to initiate the adjustment.

During adjustment, the "ADJUSTING....." message is displayed on the monitor screen.

```
SERVO ADJUST
A004:S REEL OFFSET/
              FRICTION

   ADJUSTING.....
```

During adjustment

(2) After adjustment is completed, the "ADJUST COMPLETE" message is displayed on the monitor screen.

```
SERVO ADJUST
A004:S REEL OFFSET/
              FRICTION

   ADJUST COMPLETE
```

Adjustment completed

(3) MENU or S301

(3) Press the MENU button (or switch S301 on the SS board) to return to the SERVO ADJUST menu screen.

(4) To save the adjustment data in an NV-RAM, execute the "A012: NV-RAM CONTROL" mode.

```
*A012:NV-RAM CONTROL
```

In case of NG;
When the "ADJUST INCOMPLETE" message is displayed on the monitor screen, perform the following adjustments and checks.

- For "A004: S REEL OFFSET/FRICTION", adjust the S reel FG duty cycle (A001: S REEL FG DUTY) again and check the S reel motor driver circuit on the DR-307/200 board.
- For "A005: T REEL OFFSET/FRICTION", adjust the T reel FG duty cycle (A002: T REEL FG DUTY) again and check the T reel motor driver circuit on the DR-307/200 board.

```
SERVO ADJUST
A004:S REEL OFFSET/
              FRICTION

 # ADJUST INCOMPLETE #
```

Adjustment NG

d) A006: S REEL TORQUE
A007: T REEL TORQUE

A006: Adjusts the S reel torque.
A007: Adjusts the T reel torque.

These operation methods are the same as each other. The monitor screen at right is displayed for "A006: S REEL TORQUE".

```
SERVO ADJUST
A006:S REEL TORQUE

S300(SS-52): START
```

(1) SET or S300

(1) Press the SET button (or switch S300 on the SS board) to initiate the adjustment.

During adjustment, the "ADJUSTING....." message is displayed on the monitor screen.

```
SERVO ADJUST
A006:S REEL TORQUE

ADJUSTING.....
```

During adjustment

(2) After adjustment is completed, the "ADJUST COMPLETE" message is displayed on the monitor screen.

```
SERVO ADJUST
A006:S REEL TORQUE

ADJUST COMPLETE
```

Adjustment completed

(3) MENU or S301

(3) Press the MENU button (or switch S301 on the SS board) to return to the SERVO ADJUST menu screen.

(4) To save the adjustment data in an NV-RAM, execute the "A012: NV-RAM CONTROL" mode.

```
*A012:NV-RAM CONTROL
```

In case of NG;
When the "ADJUST INCOMPLETE" message is displayed on the monitor screen, perform the following adjustments and checks.

- For "A006: S REEL TORQUE", adjust the S reel FG duty cycle (A001: S REEL FG DUTY) again and check the S reel motor driver circuit on the DR-307/200 board.
- For "A007: T REEL TORQUE", adjust the T reel FG duty cycle (A002: T REEL FG DUTY) again and check the T reel motor driver circuit on the DR-307/200 board.

```
SERVO ADJUST
A006:S REEL TORQUE

# ADJUST INCOMPLETE #
```

Adjustment NG

e) A008: S/T TENSION OFFSET

This mode adjusts the offset of an S/T tension regulator.

```
SERVO ADJUST
A008:S/T TENSION OFFSET

S300(SS-52): START
```

(1) SET or S300

(1) Press the SET button (or switch S300 on the SS board) to initiate the adjustment.

During adjustment, the "ADJUSTING....." message is displayed on the monitor screen.

```
SERVO ADJUST
A008:S/T TENSION OFFSET

ADJUSTING.....
```

During adjustment

(2) After adjustment is completed, the "ADJUST COMPLETE" message is displayed on the monitor screen.

```
SERVO ADJUST
A008:S/T TENSION OFFSET

ADJUST COMPLETE
```

Adjustment completed

(3) MENU or S301

(3) Press the MENU button (or switch S301 on the SS board) to return to the SERVO ADJUST menu screen.

```
*A012:NV-RAM CONTROL
```

(4) To save the adjustment data in an NV-RAM, execute the "A012: NV-RAM CONTROL" mode.

In case of NG;

When the "ADJUST INCOMPLETE" message is displayed on the monitor screen.

Check the S tension detector circuit (IC40) or T tension detector circuit (IC32) on the DR-307/200 board.

```
SERVO ADJUST
A008:S/T TENSION OFFSET

# ADJUST INCOMPLETE #
```

Adjustment NG

f) A010: CAPSTAN FREE SPEED

This mode adjusts the free speed of a capstan.

```
SERVO ADJUST
A010:CAPSTAN FREE SPEED


SET
 ZR2-1
 ALIGNMENT TAPE
```

(1) Insert alignment tape

(1) When alignment tape ZR2-1P/1 is inserted into this unit, this adjustment is initiated automatically.

ZR2-1P; for DVW-A500P/500P
ZR2-1 ; for DVW-A500/500

During adjustment, the "ADJUSTING....." message is displayed on the monitor screen.

Note: Be sure to use alignment tape ZR2-1P/1. If not, the adjustment is not performed correctly even if the "ADJUST COMPLETE" message is displayed after adjustment is completed.

```
SERVO ADJUST
A010:CAPSTAN FREE SPEED


   ADJUSTING.....
```

During adjustment

(2) After adjustment is completed, the "ADJUST COMPLETE" message is displayed on the monitor screen.

The alignment tape is ejected automatically.

```
SERVO ADJUST
A010:CAPSTAN FREE SPEED


   ADJUST COMPLETE
```

Adjustment completed

(3) MENU or S301

(3) Press the MENU button (or switch S301 on the SS board) to return to the SERVO ADJUST menu screen.

```
*A012:NV-RAM CONTROL
```

(4) To save the adjustment data in an NV-RAM, execute the "A012: NV-RAM CONTROL" mode.

In case of NG;

When the "ADJUST INCOMPLETE" message is displayed on the monitor screen.
Confirm that the playback tape is alignment tape ZR2-1P/1.
Then, check the capstan FG amplifier circuit, capstan motor driver circuit, and CTL amplifier circuit on the DR-307/200 board.

```
SERVO ADJUST
A010:CAPSTAN FREE SPEED


 # ADJUST INCOMPLETE #
```

Adjustment NG

g) A011: RF SWITCHING POS.

This mode adjusts the RF switching position.
This step describes the automatic adjustment operation. (The PG data displayed in this case is a standard value.)

> To perform this adjustment, alignment tape ZR2-1P/1 on which the beginning of the time code is beforehand located in 00:25:00:00 is required.

(1) Set the "*" mark to "AUTO" using a search dial (JOG mode).

```
SERVO ADJUST
A011:RF SWITCHING POS.

 AUTO
*MANUAL

    PG DATA:2500
```

(1) DIAL
(2) [SET] or [S300]

(2) Press the SET button (or switch S300 on the SS board).
The monitor screen changes as shown at right.

```
SERVO ADJUST
A011:RF SWITCHING POS.

SET
 ZR2-1
 ALIGNMENT TAPE
 TC 00:25:00:00

    PG DATA:2500
```

(3) Insert alignment tape

(3) When alignment tape ZR2-1P/1 is inserted into this unit, this adjustment is initiated automatically.

ZR2-1P; for DVW-A500P/500P
ZR2-1 ; for DVW-A500/500

During adjustment, the "ADJUSTING....." message is displayed on the monitor screen.

Note: Be sure to use alignment tape ZR2-1P/1. If not, the adjustment is not performed correctly even if the "ADJUST COMPLETE" message is displayed after adjustment is completed.

```
SERVO ADJUST
A011:RF SWITCHING POS.

   ADJUSTING.....

    PG DATA:2501
```

During adjustment

(4) After adjustment is completed, the "ADJUST COMPLETE" message is displayed on the monitor screen.
The alignment tape is then ejected automatically.

```
SERVO ADJUST
A011:RF SWITCHING POS.

   ADJUST COMPLETE

    PG DATA:2500
```

Adjustment completed

(5) [MENU] [MENU] or [S301] [S301]

(5) Press the MENU button (or switch S301 on the SS board) two times to return to the SERVO ADJUST menu screen.

```
*A012:NV-RAM CONTROL
```

(6) To save the adjustment data in an NV-RAM, execute the "A012: NV-RAM CONTROL" mode.

In case of NG; (The screen at right is one example.)

- When the "SYNC PULSE TROUBLE" message is displayed on the monitor screen.
  (1) Confirm that the playback tape is alignment tape ZR2-1P/1.
  (2) Confirm that the SYNC pulse exists at the test terminal below on the SS board.

      TP802: SYNC PLS

      No SYNC pulse exists: Perform the steps (3) and (4).
      A SYNC pulse exist: Check the SS board.

  (3) Perform the "C050: DT DRIVER CHECK" and "C051: SG LOOP CHECK" in the digital DT system.
  (4) Confirm that a segment signal exists at pins 41A and 41B of connector CN123 on the SS board.
      CN123-41A: DT SEG 0
      CN123-41B: DT SEG 1

      No segment signal exists: Check the DPR-36 board.
      A segment signal exists: Check the SS board.

- When the "SAT TROUBLE" message is displayed.
  Perform the "C041: SELFDIAG MODE" of SAT CHECK in the servo system check mode.

```
SERVO ADJUST
A011:RF SWITCHING POS.

 # ADJUST INCOMPLETE #
 # SYNC PULSE TROUBLE#

    PG DATA:2500
```

Adjustment NG

h) A012: NV-RAM CONTROL

This mode saves the servo system adjustment data in an NV-RAM.

(1) Set the "*" mark to "SAVE SERVO ADJUST DATA" using a search dial (JOG mode).

```
SERVO ADJUST
A012:NV-RAM CONTROL

*NO OPERATION
 SAVE SERVO ADJUST DATA
```

(1) DIAL
(2) [SET] or [S300]

(2) Press the SET button (or switch S300 on the SS board) to initiate the data transfer.
The "SAVING....." message is then displayed on the monitor screen.

```
SERVO ADJUST
A012:NV-RAM CONTROL

 NO OPERATION
*SAVE SERVO ADJUST DATA

   SAVING.....
```

During data saving

(3) After data transfer is completed, the "DATA SAVED" message is displayed on the monitor screen.

```
SERVO ADJUST
A012:NV-RAM CONTROL

 NO OPERATION
*SAVE SERVO ADJUST DATA

   DATA SAVED
```

Data saving completed

Note: If the power of this unit is turned off without saving the adjustment data in an NV-RAM after adjustment is completed, the adjustment data in the servo system returns to the preadjustment state.

5-7-2. Digital DT System Adjustment Mode (A02: DIGITAL DT ADJUST)

This section describes the "A02: DIGITAL DT ADJUST" mode.

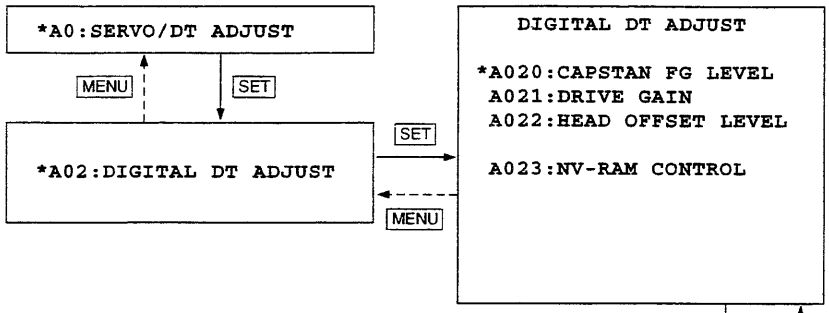

A020: CAPSTAN FG LEVEL
Adjusts the capstan FG level.
For more details, refer to page 5-54.

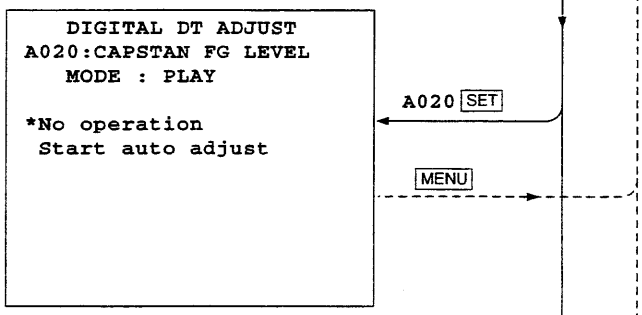

A021: DRIVE GAIN
Adjusts the drive gain in the digital DT system.
For more details, refer to page 5-56.

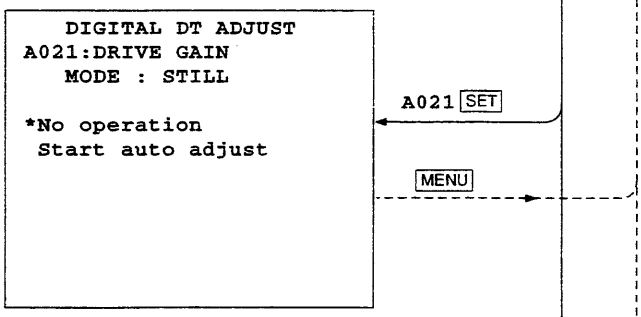

A022: HEAD OFFSET LEVEL
Adjusts the offset level of an advance head.
For more details, refer to page 5-58.

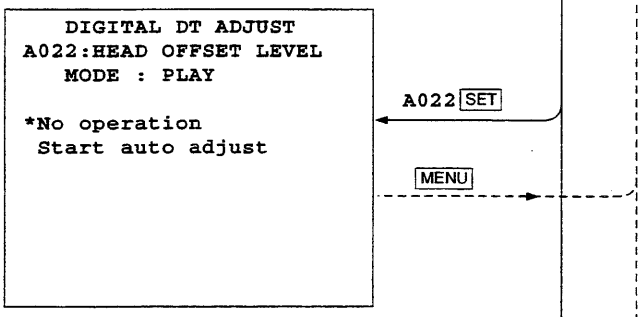

A023: NV-RAM CONTROL
Saves the digital DT system adjustment data in an NV-RAM.
For more details, refer to page 5-60.

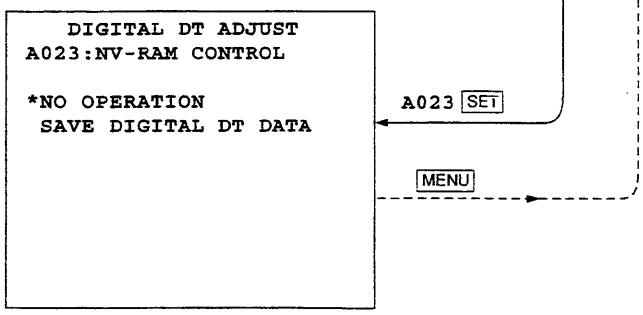

a) A020: CAPSTAN FG LEVEL

This mode adjusts the capstan FG level.

(1) Insert alignment tape ZR5-1P/1 into this unit.

ZR5-1P; for DVW-A500P/500P
ZR5-1 ; for DVW-A500/500

(2) Set the "*" mark to "Start auto adjust" using a search dial (JOG mode).

(3) Press the SET button (or switch S300 on the SS board).
(If the unit has already entered the PLAY mode, the adjustment is initiated.)

(4) The "Push PLAY button" message is displayed on the monitor screen. Press the PLAY button to initiate the adjustment.

During adjustment, the "ADJUSTING....." message is displayed on the monitor screen.

(5) After adjustment is completed, the "ADJUST COMPLETE" message is displayed on the monitor screen.

(6) Press the MENU button (or switch S301 on the SS board) to return to the DIGITAL DT ADJUST menu screen.

(7) To save the adjustment data in an NV-RAM, execute the "A023: NV-RAM CONTROL" mode.

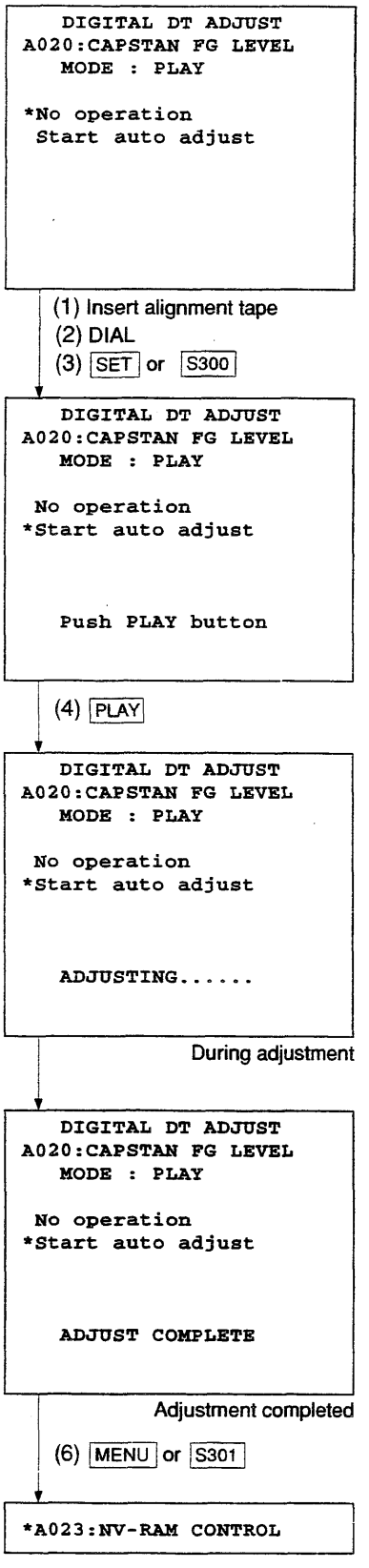

How to eject the cassette tape

Return to the menu in the servo/DT system adjustment mode. The cassette tape is then ejected automatically.

In case of NG;

When the "ADJUST COMPLETE" message is not displayed on the monitor screen.
Check the capstan motor and capstan FG amplifier (on the DR-307/200 board).

```
   DIGITAL DT ADJUST
A020:CAPSTAN FG LEVEL
   MODE : PLAY

 No operation
*Start auto adjust



 # ADJUST INCOMPLETE #
```

Adjustment NG

b) A021: DRIVE GAIN

This mode adjusts the drive gain of the bimorph head.

(1) Insert alignment tape ZR5-1P/1 into this unit.

ZR5-1P; for DVW-A500P/500P
ZR5-1 ; for DVW-A500/500

(2) Set the "*" mark to "Start auto adjust" using a search dial (JOG mode).

(3) Press the SET button (or switch S300 on the SS board).
(If the unit has already entered the STILL mode, the adjustment is initiated.)

(4) The "Push JOG button" message is displayed on the monitor screen.
Press the JOG button. The unit then enters the STILL mode to initiate the adjustment.

During adjustment, the "ADJUSTING....." message is displayed on the monitor screen.

(5) After adjustment is completed, the "ADJUST COMPLETE" message is displayed on the monitor screen.

(6) Press the MENU button (or switch S301 on the SS board) to return to the DIGITAL DT ADJUST menu screen.

(7) To save the adjustment data in an NV-RAM, execute the "A023: NV-RAM CONTROL" mode.

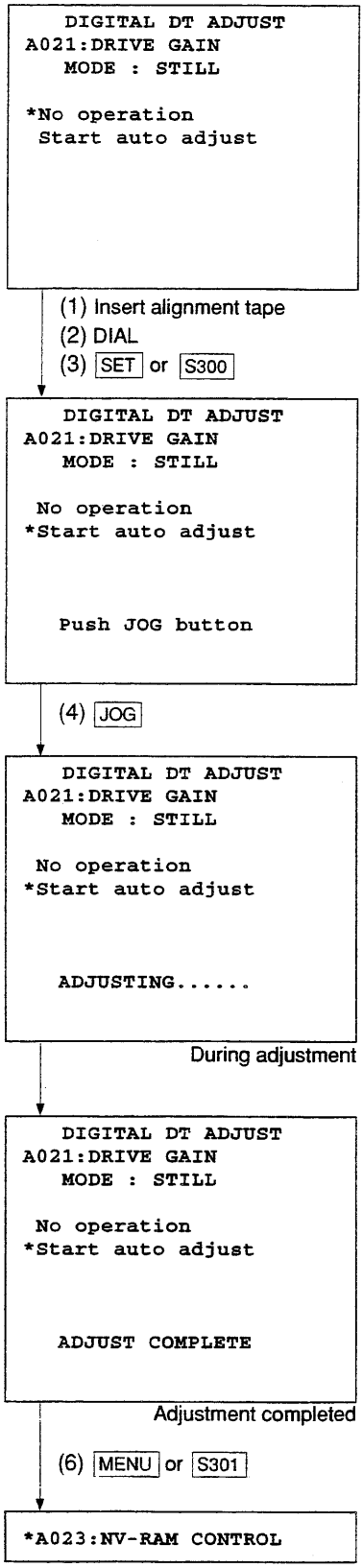

How to eject the cassette tape

Return to the menu in the servo/DT system adjustment mode. The cassette tape is then ejected automatically.

In case of NG; (The screen at right is one example.)
When the "ADJUST COMPLETE" message is not displayed on the monitor screen, perform the following checks and confirmation.

(1) Perform the "C050: DT DRIVER CHECK" and "C051: SG LOOP CHECK" in the digital DT system.

(2) Confirm that an RF envelope signal exists at the test terminals below on the SS board.

TP2501: ENV B/D
TP2502: ENV A/C

No RF envelope signal exists: Check the EQ board.
An RF envelope signal exists: Check the SS board.

```
   DIGITAL DT ADJUST
A021:DRIVE GAIN
   MODE : STILL

 No operation
*Start auto adjust



 # ADJUST INCOMPLETE #
     A/B ch
```

Adjustment NG

c) A022: HEAD OFFSET LEVEL

This mode adjusts the offset level of an advance head.

(1) Insert alignment tape ZR5-1P/1 into this unit.

ZR5-1P; for DVW-A500P/500P
ZR5-1 ; for DVW-A500/500

(2) Set the "*" mark to "Start auto adjust" using a search dial (JOG mode).

(3) Press the SET button (or switch S300 on the SS board).
(If the unit has already entered the PLAY mode, the adjustment is initiated.)

(4) The "Push PLAY button" message is displayed on the monitor screen.
Press the PLAY button to initiate the adjustment.

During adjustment, the "ADJUSTING....." message is displayed on the monitor screen.

(5) After adjustment is completed, the "ADJUST COMPLETE" message is displayed on the monitor screen.

(6) Press the MENU button (or switch S301 on the SS board) to return to the DIGITAL DT ADJUST menu screen.

(7) To save the adjustment data in an NV-RAM, execute the "A023: NV-RAM CONTROL" mode.

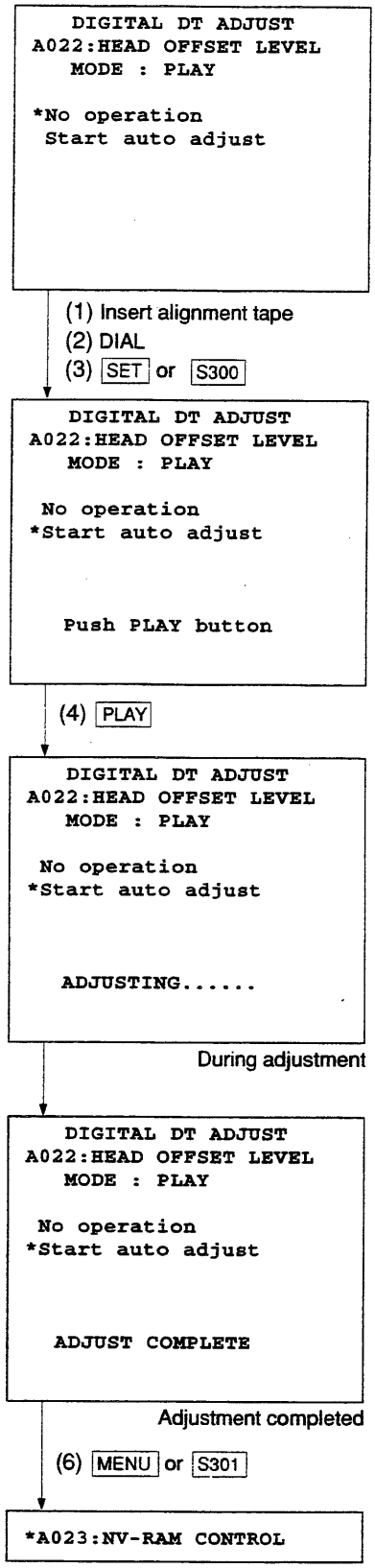

How to eject the cassette tape

Return to the menu in the servo/DT system adjustment mode. The cassette tape is then ejected automatically.

In case of NG; (The screen at right is one example.)
When the "ADJUST COMPLETE" message is not displayed on the monitor screen, perform the following checks and confirmation.

(1) Perform the "C050: DT DRIVER CHECK" and "C051: SG LOOP CHECK" in the digital DT system.

(2) Confirm that a segment signal exists at pins 41A and 41B of connector CN123 on the SS board.
CN123-41A: DT SEG 0
CN123-41B: DT SEG 1

No segment signal exists: Check the DPR-36 board.
A segment signal exists: Check the SS board.

```
   DIGITAL DT ADJUST
A022:HEAD OFFSET LEVEL
   MODE : PLAY

 No operation
*Start auto adjust



 # ADJUST INCOMPLETE #
     A/B ch
```

Adjustment NG

d) A023: NV-RAM CONTROL

This mode saves the digital DT system adjustment data in an NV-RAM.

(1) Set the "*" mark to "SAVE DIGITAL DT DATA" using a search dial (JOG mode).

```
   DIGITAL DT ADJUST
A023:NV-RAM CONTROL

*NO OPERATION
 SAVE DIGITAL DT DATA
```

(1) DIAL
(2) SET or S300

(2) Press the SET button (or switch S300 on the SS board) to initiate the data transfer.
The "SAVING....." message is then displayed on the monitor screen.

```
   DIGITAL DT ADJUST
A023:NV-RAM CONTROL

 NO OPERATION
*SAVE DIGITAL DT DATA


   SAVING......
```

During data saving

(3) After data transfer is completed, the "DATA SAVED" message is displayed on the monitor screen.

```
   DIGITAL DT ADJUST
A023:NV-RAM CONTROL

 NO OPERATION
*SAVE DIGITAL DT DATA


   DATA SAVED
```

Data saving completed

Note: If the power of this unit is turned off without saving the adjustment data in an NV-RAM after adjustment is completed, the adjustment data in the digital DT system returns to the preadjustment state.

5-7-3. Analog DT System Adjustment Mode (For DVW-A500P/A500) (A03: ANALOG DT ADJUST)

This section describes the "A03: ANALOG DT ADJUST" mode.

Exclusive mode for the DVW-A500P/A500

Note: The data value displayed in this case is one example.

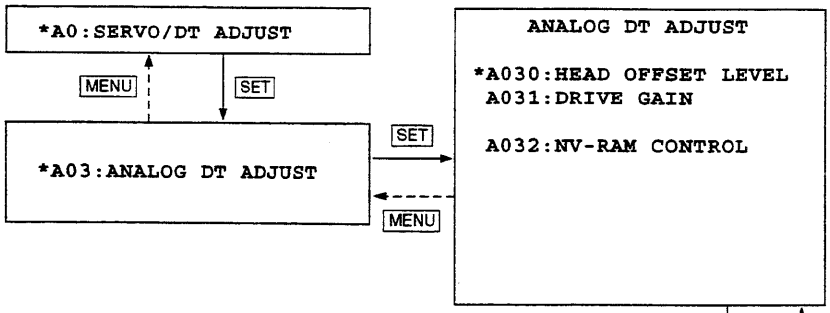

A030: HEAD OFFSET LEVEL
Adjusts the offset level of a Betacam PB head.
For more details, refer to page 5-62.
(Page 5-62 describes for automatic adjustment only.)

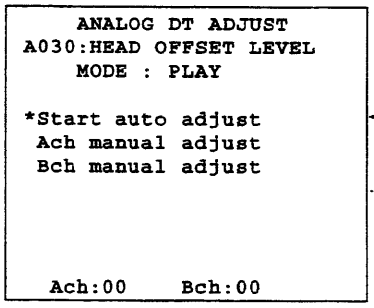

A031: DRIVE GAIN
Adjusts the drive gain of an analog DT system.
For more details, refer to page 5-64.
(Page 5-64 describes for automatic adjustment only.)

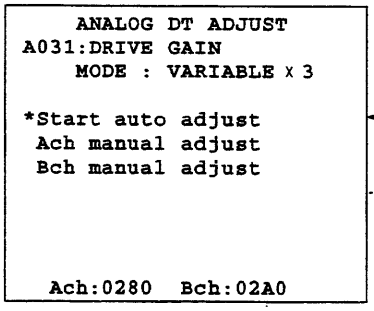

A032: NV-RAM CONTROL
Saves the analog DT system adjustment data in an NV-RAM.
For more details, refer to page 5-65.

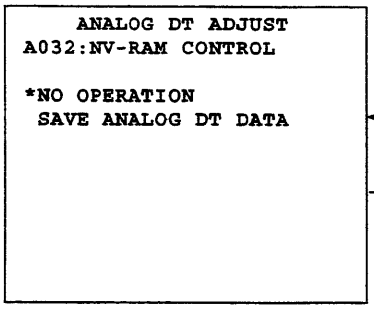

a) A030: HEAD OFFSET LEVEL

This mode adjusts the offset level of a Betacam PB head.
This step describes the automatic adjustment operation.
(The data value displayed in this case is a standard value.)

(1) Insert alignment tape CR5-1BPS/1B or CR5-2APS/2A whose beginning is beforehand located in the color bars signal portion into this unit.

CR5-1B PS: TC 00:14:00:00
CR5-2A PS: TC 00:00:00:00 } for DVW-A500P
CR5-1B : TC 00:14:00:00
CR5-2A : TC 00:00:00:00 } for DVW-A500

(2) Set the "*" mark to "Start auto adjust" using a search dial (JOG mode).

(3) Press the SET button (or switch S300 on the SS board).
(If the unit has already entered the PLAY mode, the adjustment is initiated.)

(4) The "Push PLAY button" message is displayed on the monitor screen.
Press the PLAY button to initiate the adjustment.

During adjustment, the "ADJUSTING....." message is displayed on the monitor screen.
However, the displayed data value does not change during adjustment.

(5) After adjustment is completed, the "ADJUST COMPLETE" message is displayed on the monitor screen.
The data value changes to the data value during this adjustment.

(6) Press the MENU button (or switch S301 on the SS board) to return to the ANALOG DT ADJUST menu screen.

(7) To save the adjustment data in an NV-RAM, execute the "A032: NV-RAM CONTROL" mode.

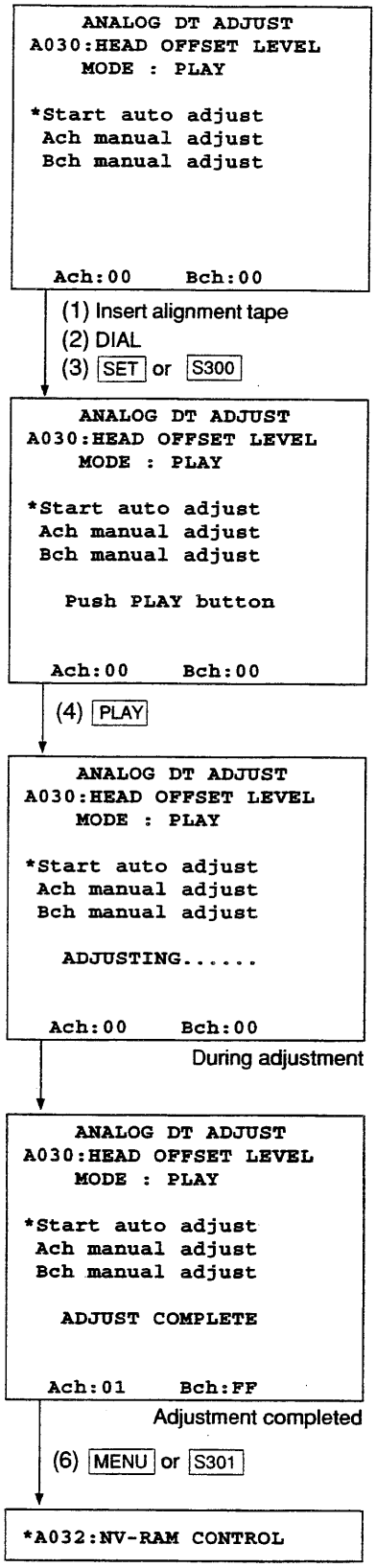

How to eject the cassette tape

Return to the menu in the servo/DT system adjustment mode. The cassette tape is then ejected automatically.

In case of NG; (The screen at right is one example.)
When the "ADJUST COMPLETE" message is not displayed on the monitor screen, perform the following check and confirmation.

(1) Perform the "C060: SG LOOP CHECK" in the analog DT system.
(2) Confirm that an RF envelope signal exists at the test terminal below on the SS board.

TP2100: Y RF ENVELOPE

No RF envelope signal exists: Check the DM-89 board.
An RF envelope signal exists: Check the SS board.

```
    ANALOG DT ADJUST
A030:HEAD OFFSET LEVEL
    MODE : PLAY

*Start auto adjust
 Ach manual adjust
 Bch manual adjust

 # ADJUST INCOMPLETE #
     Ach

  Ach:00     Bch:00
```

Adjustment NG

b) A031: DRIVE GAIN

This mode adjusts the drive gain of an analog DT system.
This step describes the automatic adjustment operation.
(The data value displayed in this case is a standard value.)

(1) Insert alignment tape CR5-1BPS/1B or CR5-2APS/2A whose beginning is beforehand located in the color bars signal portion into this unit.

CR5-1B PS: TC 00:14:00:00
CR5-2A PS: TC 00:00:00:00 } for DVW-A500P
CR5-1B : TC 00:14:00:00
CR5-2A : TC 00:00:00:00 } for DVW-A500

(2) Set the "*" mark to "Start auto adjust" using a search dial (JOG mode).

(3) Press the SET button (or switch S300 on the SS board).
(If the unit has already entered the variable three times (×3) the normal mode, the adjustment is initiated.)

(4) The "Set VARIABLE ×3" message is displayed on the monitor screen.
Press the VAR button, then turn the search dial in the forward direction and put the unit into the variable three times (×3) the normal mode to initiate the adjustment.

During adjustment, the "ADJUSTING....." message is displayed on the monitor screen. The data value then changes.

(5) After adjustment is completed, the "ADJUST COMPLETE" message is displayed on the monitor screen.

(6) Press the JOG button.
(Set the search dial to the JOG mode)

(7) Press the MENU button (or switch S301 on the SS board) to return to the ANALOG DT ADJUST menu screen.

(8) To save the adjustment data in an NV-RAM, execute the "A032: NV-RAM CONTROL" mode.

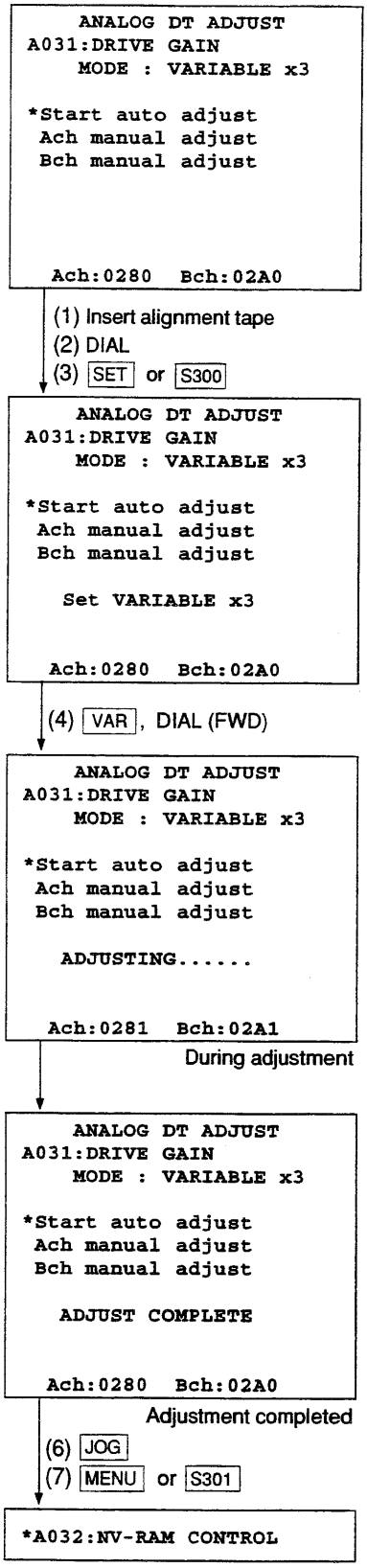

How to eject the cassette tape

Return to the menu in the servo/DT system adjustment mode. The cassette tape is then ejected automatically.

In case of NG; (The screen at right is one example.)
When the "ADJUST COMPLETE" message is not displayed on the monitor screen, perform the following check and confirmation.

(1) Perform the "C060: SG LOOP CHECK" in the analog DT system.
(2) Confirm that the signals at pins 9A and 9B of connector CN123 on the SS board are synchronized.

CN123-9A: Y WZ ( )
CN123-9B: C WZ ( )

When no signals exist and are synchronized, check the DM-89 board, TBC-24/23 boards, then EQ board.
When signals exist and are synchronized, check the SS board.

```
    ANALOG DT ADJUST
A031:DRIVE GAIN
    MODE : VARIABLE x3

*Start auto adjust
 Ach manual adjust
 Bch manual adjust

 # ADJUST INCOMPLETE #
      Ach

 Ach:0280  Bch:02A0
```

Adjustment NG

5-7-3. Analog DT System Adjustment Mode (For DVW-A500P/A500)

c) A032: NV-RAM CONTROL

This mode saves the analog DT system adjustment data in an NV-RAM.

(1) Set the "*" mark to "SAVE ANALOG DT DATA" using a search dial (JOG mode).

```
    ANALOG DT ADJUST
A032:NV-RAM CONTROL

*NO OPERATION
 SAVE ANALOG DT DATA
```

(1) DIAL
(2) SET or S300

(2) Press the SET button (or switch S300 on the SS board) to initiate the data transfer. The "SAVING....." message is then displayed on the monitor screen.

```
    ANALOG DT ADJUST
A032:NV-RAM CONTROL

 NO OPERATION
*SAVE ANALOG DT DATA


   SAVING......
```

During data saving

(3) After data transfer is completed, the "DATA SAVED" message is displayed on the monitor screen.

```
    ANALOG DT ADJUST
A032:NV-RAM CONTROL

 NO OPERATION
*SAVE ANALOG DT DATA


   DATA SAVED
```

Data saving completed

Note: If the power of this unit is turned off without saving the adjustment data in an NV-RAM after adjustment is completed, the adjustment data in the analog DT system returns to the preadjustment state.

5-8. RF SYSTEM ADJUSTMENT MODE

5-8. RF SYSTEM ADJUSTMENT MODE (A1: RF ADJUST)

This mode can adjustment the RF system. (Do it with the pre-read off.)
For how to activate and terminate the maintenance mode, refer to page 5-3.

Note: The data value displayed in this case is one example.

```
MAINTENANCE MODE

C0 :  SERVO/DT     CHECK
C1 :     RF        CHECK
C2 : AUDIO/VIDEO   CHECK
C3 : BETACAM PB    CHECK
C4 :   OTHERS      CHECK
A0 :  SERVO/DT    ADJUST
*A1 :    RF       ADJUST
A2 : AUDIO/VIDEO  ADJUST
A3 : BETACAM PB   ADJUST
```

(Above screen is displayed for the DVW-A500P/A500.)

A1 [SET] →

← [MENU]

```
RF ADJUST MODE

*A10:A11-17,1B,1C ADJUST
 A11:PLAY PLL
 A12:ADV EQUALIZER
 A13:CNF EQUALIZER
 A14:SHUTTLE FWD PLL
 A15:SHUTTLE REV PLL
 A16:VAR FWD PLL
 A17:VAR REV PLL
 A18:REC CURRENT
 A19:ADV LEVEL
```

These mode are scrolled and displayed.
A1A: CNF LEVEL
A1B: P.PLAY+ PLL } Displayed only when BKDW-507 is installed.
A1C: P.PLAY– PLL }
A1F: NV-RAM CONTROL

The A1B and A1C modes are applied on the unit in which the two version numbers of SYS1 ROM(IC12) and SV1 ROM(IC761) on the SS board are 2.10 or higher. Provided the version number of DT ROM(IC211/IC2110) on the SS board are 2.00 or higher.

(Left screen is displayed when BKDW-507 is installed.)

A10: A11-A17 ADJUST
(When BKDW-507 is not installed)
A10: A11-A17, 1B, 1C ADJUST
(When BKDW-507 is installed)
Automatically executes the adjustment menus in A11 through A17 (and A1B, A1C).
For more details, refer to page 5-66.

The right screen is displayed when optional BKDW-507 is installed.

```
RF ADJUST MODE
A10:A11-17,1B,1C ADJUST

Set alignment tape
and push SET button.
```

A10 [SET] →

← [MENU]

A11: PLAY PLL
Adjusts the VCO free-running frequency of a PB PLL circuit in the PLAY mode.
For more details, refer to page 5-68.

```
RF ADJUST MODE
A11:PLAY PLL
*Manual

ADV A/Cch PLL      55
ADV B/Dch PLL      55
CNF A/Cch PLL      55
CNF B/Dch PLL      55
```

A11 [SET] →

← [MENU]

A12: ADV EQUALIZER
Adjusts the gain and phase of the PB equalizer circuit for an advance head.
For more details, refer to page 5-70.

```
RF ADJUST MODE
A12:ADV EQUALIZER
*Manual

Ach  GAIN 55  PHASE 55
Bch  GAIN 55  PHASE 55
Cch  GAIN 55  PHASE 55
Dch  GAIN 55  PHASE 55
```

A12 [SET] →

← [MENU]

A13: CNF EQUALIZER
Adjusts the gain and phase of the PB equalizer circuit for a confidence head.
For more details, refer to page 5-70.

```
RF ADJUST MODE
A13:CNF EQUALIZER
*Manual

Ach  GAIN 55  PHASE 55
Bch  GAIN 55  PHASE 55
Cch  GAIN 55  PHASE 55
Dch  GAIN 55  PHASE 55
```

A13 [SET] →

← [MENU]

```
RF ADJUST MODE
A14:SHUTTLE FWD PLL
*Manual

ADV A/Cch PLL      55
ADV B/Dch PLL      55
CNF A/Cch PLL      55
CNF B/Dch PLL      55
```

A14 [SET] →

← [MENU]

A14: SHUTTLE FWD PLL
Adjusts the VCO free-running frequency of a PB PLL circuit in the SHUTTLE FWD mode.
For more details, refer to page 5-68.

```
RF ADJUST MODE
A15:SHUTTLE REV PLL
*Manual

ADV A/Cch PLL      55
ADV B/Dch PLL      55
CNF A/Cch PLL      55
CNF B/Dch PLL      55
```

A15 [SET] →

← [MENU]

A15: SHUTTLE REV PLL
Adjusts the VCO free-running frequency of a PB PLL circuit in the SHUTTLE REV mode.
For more details, refer to page 5-68.

```
RF ADJUST MODE
A16:VAR FWD PLL
*Manual

ADV A/Cch PLL      55
ADV B/Dch PLL      55
```

A16 [SET] →

← [MENU]

A16: VAR FWD PLL
Adjusts the VCO free-running frequency of a PB PLL circuit in the VARIABLE FWD mode.
For more details, refer to page 5-68.

```
RF ADJUST MODE
A17:VAR REV PLL
*Manual

ADV A/Cch PLL      55
ADV B/Dch PLL      55
```

A17 [SET] →

← [MENU]

A17: VAR REV PLL
Adjusts the VCO free-running frequency of a PB PLL circuit in the VARIABLE REV mode.
For more details, refer to page 5-68.

5-66

5-8. RF SYSTEM ADJUSTMENT MODE

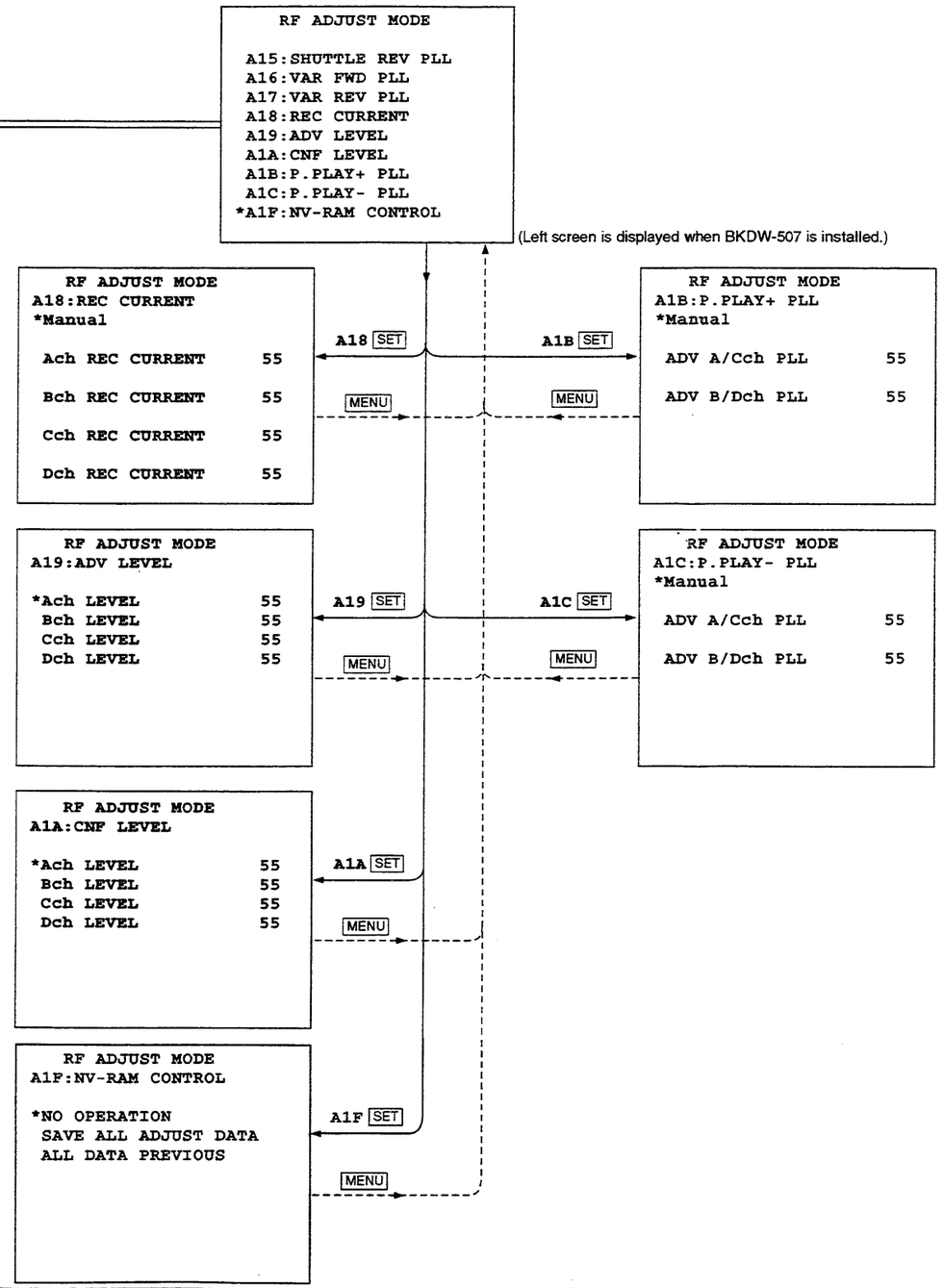

A18: REC CURRENT
Adjusts the recording current to each recording head.
For more details, refer to page 5-72.

A19: ADV LEVEL
Adjusts the RF PB level of an advance head.
For more details, refer to page 5-74.

A1A: CNF LEVEL
Adjusts the RF PB level of a confidence head.
For more details, refer to page 5-74.

A1F: NV-RAM CONTROL
Saves the RF system adjustment data in an NV-RAM or returns it to the preadjustment data.
For more details, refer to page 5-75.

A1B: P.PLAY+ PLL
Adjusts the VCO free-running frequency of a PB PLL circuit in the PROGRAM PLAY(FAST) mode.
For more details, refer to page 5-68.

A1C: P.PLAY– PLL
Adjusts the VCO free-running frequency of a PB PLL circuit in the PROGRAM PLAY(SLOW) mode.
For more details, refer to page 5-68.

a) A10: A11-A17 ADJUST/A10: A11-17, 1B, 1C ADJUST

This mode executes the following adjustment menus automatically and continuously.

A11: PLAY PLL
A12: ADV EQUALIZER
A13: CNF EQUALIZER
A14: SHUTTLE FWD PLL
A15: SHUTTLE REV PLL
A16: VAR FWD PLL
A17: VAR REV PLL
A1B: P.PLAY+ PLL } These adjustment modes are performed when
A1C: P.PLAY– PLL } BKDW-507 is installed.

(1) Insert alignment tape ZR5-1P/1 into this unit (with the tape rewound in advance).
ZR5-1P ; for DVW-A500P/500P
ZR5-1 ; for DVW-A500/500

(2) Press the SET button (or switch S300 on the SS board) to initiate the adjustment.

The "A11: PLAY PLL" adjustment is performed first.
The "Adjusting..." message is displayed during adjustment.

As the adjustment progresses, the display in the fourth line (※) changes.

Note: The "Adjust Incomplete" message is displayed when the tape running stops during adjustment.

(3) If no abnormality is found after all the adjustments are completed, the "Adjust Complete" message is displayed on the monitor screen.

(4) Press the MENU button (or switch S301 on the SS board) to return to the RF ADJUST MODE menu screen.

(5) To save the adjustment data in an NV-RAM, execute the "A1F: NV-RAM CONTROL" mode.

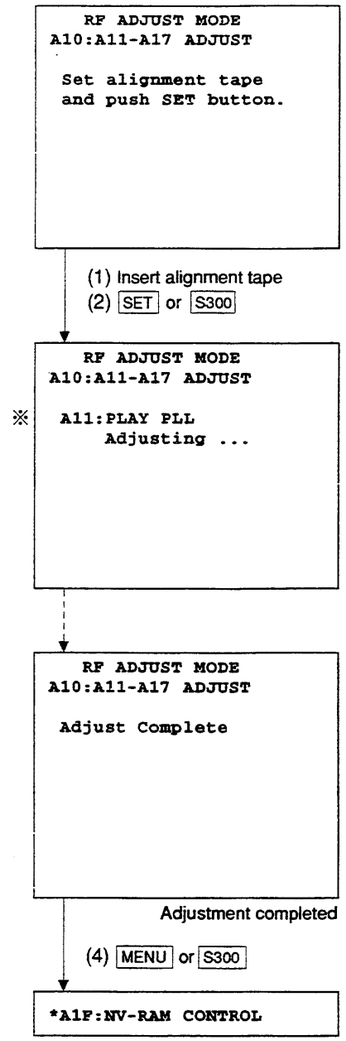

b) A11: PLAY PLL
A14: SHUTTLE FWD PLL
A15: SHUTTLE REV PLL
A16: VAR FWD PLL
A17: VAR REV PLL
A1B: P.PLAY+ PLL } These adjustment modes are displayed when
A1C: P.PLAY– PLL } BKDW-507 is installed.

These modes adjust the VCO free-running frequency of a PB PLL circuit in the following PB modes. For these modes, manual or automatic adjustment can be selected. In this case, only the automatic adjustment is described on the next page with "A11: PLAY PLL" as an example.

A11 : PLAY mode
A14 : SHUTTLE FWD mode [Tape top]
A15 : SHUTTLE REV mode [Tape end]
A16 : VARIABLE FWD mode
A17 : VARIABLE REV mode
A1B : PROGRAM PLAY(FAST) mode
A1C : PROGRAM PLAY(SLOW) mode

Note: The "Adjust Incomplete" message is displayed when the tape running stops during adjustment.
In this case, rewind or fast forward the alignment tape, then readjust.
For the adjustment in the SHUTTLE mode, especially, put the tape into the state in [ ] mentioned above, then adjust.

Operation during automatic adjustment

(The monitor screen is displayed as an example of "A11: PLAY PLL". The displayed data value and the ">" number are an example.)

```
  RF ADJUST MODE
A11:PLAY PLL
*Manual

 ADV A/Cch PLL        55

 ADV B/Dch PLL        55

 CNF A/Cch PLL        55

 CNF B/Dch PLL        55
```

(1) JOG + DIAL (FWD)

(1) Change "Manual" to "Auto".

Set the "*" mark to "Manual" using a search dial. After that, turn the search dial in the forward (↻) direction while pressing and holding the JOG (or SHUTTLE) button.
The "Auto (Push SET button)" message is then displayed on the monitor screen.

```
  RF ADJUST MODE
A11:PLAY PLL
*Auto (Push SET button)

 ADV A/Cch PLL        55

 ADV B/Dch PLL        55

 CNF A/Cch PLL        55

 CNF B/Dch PLL        55
```

(2) Insert alignment tape SET or S300

(2) Insert alignment tape ZR5-1P/1 into this unit and press the SET button (or switch S300 on the SS board). The tape then runs, and the adjustment is initiated.

ZR5-1P ; for DVW-A500P/500P
ZR5-1 ; for DVW-A500/500

When the SET button (or switch S300) is pressed without inserting the alignment tape, the "Waiting ..." message is displayed until the alignment tape is inserted.

During adjustment, the "Auto Adjusting ..." message is displayed on the monitor screen.

Note: The "Adjust Incomplete" message is displayed when the tape running stops during adjustment.

```
  RF ADJUST MODE
A11:PLAY PLL
*Auto Adjusting ...

 ADV A/Cch PLL        75
      >>>>>>
 ADV B/Dch PLL        75
      >>>>>>>
 CNF A/Cch PLL        75
      >>>>>
 CNF B/Dch PLL        75
      >>>>>>>
```

During adjustment

(3) After adjustment is completed, the "Auto Adjust Complete" message is displayed on the monitor screen. The tape running then stops.

```
  RF ADJUST MODE
A11:PLAY PLL
*Auto Adjust Complete

 ADV A/Cch PLL        55
      >>>
 ADV B/Dch PLL        55
      >>
 CNF A/Cch PLL        55
      >>>
 CNF B/Dch PLL        55
      >>
```

Adjustment completed

(4) MENU or S301

(4) Press the MENU button (or switch S301 on the SS board) to return to the RF ADJUST MODE menu screen.

```
*A1F:NV-RAM CONTROL
```

(5) To save the adjustment data in an NV-RAM, execute the "A1F: NV-RAM CONTROL" mode.

c) A12: ADV EQUALIZER
A13: CNF EQUALIZER

These modes adjust the gain and phase of the PB equalizer circuit for each head below. For these modes, manual or automatic adjustment can be selected. In this case, only the automatic adjustment operation is described on the next page with "A12: ADV EQUALIZER" as an example.

A12: Advance head
A13: Confidence head

Note: The "Adjust Incomplete" message is displayed when the tape running stops during adjustment.
In this case, rewind or fast forward the alignment tape, then readjust.

Operation during automatic adjustment

(The monitor screen is displayed as an example of "A12: ADV EQUALIZER". The displayed data value and the ">" number are an example.)

```
   RF ADJUST MODE
A12:ADV EQUALIZER
*Manual

 Ach  GAIN 55  PHASE 55

 Bch  GAIN 55  PHASE 55

 Cch  GAIN 55  PHASE 55

 Dch  GAIN 55  PHASE 55
```

(1) JOG + DIAL (FWD)

(1) Change "Manual" to "Auto".

Set the "*" mark to "Manual" using a search dial. After that, turn the search dial in the forward (↻) direction while pressing and holding the JOG (or SHUTTLE) button.
The "Auto (Push SET button)" message is then displayed on the monitor screen.

```
   RF ADJUST MODE
A12:ADV EQUALIZER
*Auto (Push SET button)

 Ach  GAIN 55  PHASE 55

 Bch  GAIN 55  PHASE 55

 Cch  GAIN 55  PHASE 55

 Dch  GAIN 55  PHASE 55
```

(2) Insert alignment tape SET or S300

(2) Insert alignment tape ZR5-1P/1 into this unit and press the SET button (or switch S300 on the SS board). The tape then runs, and the adjustment is initiated.

ZR5-1P ; for DVW-A500P/500P
ZR5-1 ; for DVW-A500/500

When the SET button (or switch S300) is pressed without inserting the alignment tape, the "Waiting ..." message is displayed until the alignment tape is inserted.

During adjustment, the "Auto Adjusting ..." message is displayed on the monitor screen.

Note: The "Adjust Incomplete" message is displayed when the tape running stops during adjustment.

```
   RF ADJUST MODE
A12:ADV EQUALIZER
*Auto Adjusting ...

 Ach  GAIN 55  PHASE 55
      >>>>
 Bch  GAIN 55  PHASE 55
      >>>>>
 Cch  GAIN 55  PHASE 55
      >>>
 Dch  GAIN 55  PHASE 55
      >>>>>
```

During adjustment

(3) After adjustment is completed, the "Auto Adjust Complete" message is displayed on the monitor screen. The tape running then stops.

```
   RF ADJUST MODE
A12:ADV EQUALIZER
*Auto Adjust Complete

 Ach  GAIN 55  PHASE 55
      >>>
 Bch  GAIN 55  PHASE 55
      >>>>
 Cch  GAIN 55  PHASE 55
      >>>
 Dch  GAIN 55  PHASE 55
      >>>>
```

Adjustment completed

(4) MENU or S301

(4) Press the MENU button (or switch S301 on the SS board) to return to the RF ADJUST MODE menu screen.

```
*A1F:NV-RAM CONTROL
```

(5) To save the adjustment data in an NV-RAM, execute the "A1F: NV-RAM CONTROL" mode.

d) A18: REC CURRENT

This mode adjusts the recording current to each recording head. Manual adjustment or automatic adjustment can be selected. Only the automatic adjustment operation is described in this case.
(The displayed data value and the ">" number are one example.)

```
   RF ADJUST MODE
A18:REC CURRENT
*Manual

 Ach REC CURRENT      55

 Bch REC CURRENT      55

 Cch REC CURRENT      55

 Dch REC CURRENT      55
```

(0) Output a 100% / 75% color bars signal in advance from the internal video test signal generator of this unit as a recording signal source.
(Set in "C21: VIDEO TEST SG".)

(1) JOG + DIAL (FWD)

```
   RF ADJUST MODE
A18:REC CURRENT
*Auto (push SET button)

 Ach REC CURRENT      55

 Bch REC CURRENT      55

 Cch REC CURRENT      55

 Dch REC CURRENT      55
```

(1) Change "Manual" to "Auto".

Set the "*" mark to "Manual" using a search dial. After that, turn the search dial in the forward (↻) direction while pressing and holding the JOG (or SHUTTLE) button.
The "Auto (Push SET button)" message is then displayed on the monitor screen.

(2) Insert a recording tape
SET or S300

```
   RF ADJUST MODE
A18:REC CURRENT
*Auto Adjusting ...

 Ach REC CURRENT      65
      >>>>
 Bch REC CURRENT      65
      >>>>>
 Cch REC CURRENT      65
      >>>>
 Dch REC CURRENT      65
      >>>>>
```

During adjustment

(2) Insert a recording digital tape into this unit and press the SET button (or switch S300 on the SS board). The tape then runs, and the adjustment is initiated.

When the SET button (or switch S300) is pressed without inserting the recording tape, the "Waiting ..." message is displayed until the tape is inserted.

During adjustment, the "Auto Adjusting ..." message is displayed on the monitor screen.

Note: The "Adjust Incomplete" message is displayed when the tape running stops during adjustment.

```
   RF ADJUST MODE
A18:REC CURRENT
*Auto Adjust Complete

 Ach REC CURRENT      55
      >>
 Bch REC CURRENT      55
      >>>
 Cch REC CURRENT      55
      >>>
 Dch REC CURRENT      55
      >>
```

Adjustment completed

(3) After adjustment is completed, the "Auto Adjust Complete" message is displayed on the monitor screen. The tape running then stops.

(4) MENU or S301

```
*A1F:NV-RAM CONTROL
```

(4) Press the MENU button (or switch S301 on the SS board) to return to the RF ADJUST MODE menu screen.

(5) To save the adjustment data in an NV-RAM, execute the "A1F: NV-RAM CONTROL" mode.

e) A19: ADV LEVEL
A1A: CNF LEVEL

These modes adjust the RF PB level of each head below. The RF PB level is adjusted manually. Only the manual adjustment operation is described on the next page with "A19: ADV LEVEL" as an example.

A19: Advance head
A1A: Confidence head

Caution: Do not change the adjustment data carelessly. This causes a trouble. To adjust the data, adjust it according to the adjustment described in the Maintenance Manual Part 2, Volume-1.

If the adjustment data has been changed carelessly, execute the "ALL DATA PREVIOUS" mode in A1F: NV-RAM CONTROL or turn off the power of this unit without executing the A1F: NV-RAM CONTROL.
Never execute the "SAVE ALL ADJUST DATA" mode.

Operation during manual adjustment
(The monitor screen is displayed as an example of "A19: ADV LEVEL". The displayed data value is an example.)

```
   RF ADJUST MODE
A19:ADV LEVEL

*Ach LEVEL          55
 Bch LEVEL          55
 Cch LEVEL          55
 Dch LEVEL          55
```

(1) SET or S300

(1) Press the SET button (or switch S300 on the SS board). At that time, the unit temporarily exits the maintenance mode. This enables the normal operation. (Prompt "■" is displayed in the upper-right position of the superimposed screen, and the time counter is put into the normal state.)

```
   RF ADJUST MODE          ■
A19:ADV LEVEL

*Ach LEVEL          55
 Bch LEVEL          55
 Cch LEVEL          55
 Dch LEVEL          55
```

(2) Insert alignment tape
PLAY
(3) MENU or S301

(2) Insert alignment tape ZR5-1P/1 into this unit and press the PLAY button.

ZR5-1P ; for DVW-A500P/500P
ZR5-1 ; for DVW-A500/500

(3) Press the MENU button (or switch S301 on the SS board) to return to the maintenance mode.
(The "■" prompt display disappears on the screen, and the time counter displays the menu number.)

(4) Set "*" mark to the channel to be adjusted using a search dial (JOG mode).

```
   RF ADJUST MODE
A19:ADV LEVEL

*Ach LEVEL          55
 Bch LEVEL          55
 Cch LEVEL          55
 Dch LEVEL          55
```

(4) DIAL

(5) Turn the search dial to change the data while pressing the JOG (or SHUTTLE) button.

FWD (↻): Increases the data value. (FF is followed by 00.)
REV (↺) : Decreases the data value. (00 is followed by FF.)

```
   RF ADJUST MODE
A19:ADV LEVEL

 Ach LEVEL          55
 Bch LEVEL          55
 Cch LEVEL          55
*Dch LEVEL          55
```

(6) For any other channels, repeat steps (4) and (5).

(7) After adjustment is completed, press the MENU button (or switch S301 on the SS board) to return to the RF ADJUST MODE menu screen.

(7) MENU or S301

(8) To save the adjustment data in an NV-RAM, execute the "A1F: NV-RAM CONTROL" mode.

```
*A1F:NV-RAM CONTROL
```


f) A1F: NV-RAM CONTROL
This mode saves the RF system adjustment data in an NV-RAM or returns it to the preadjustment state without saving the RF system adjustment data.

Caution: Once the RF system adjustment data is saved in an NV-RAM, it cannot return to the preadjustment state.

(1) Using a search dial (JOG mode), set the "*" mark as follows:
Set it to "SAVE ALL ADJUST DATA" when the adjustment data after adjustment is saved.
Set it to "ALL DATA PREVIOUS" when the adjustment data before adjustment is returned.

```
   RF ADJUST MODE
A1F:NV-RAM CONTROL

*NO OPERATION
 SAVE ALL ADJUST DATA
 ALL DATA PREVIOUS
```

(2) DIAL
(3) SET or S300

(2) Press the SET button (or switch S300 on the SS board) to initiate the data transfer.

The monitor screen at right is displayed when the adjustment data is saved.
The "Loading ..." message is displayed when the adjustment data before adjustment is returned.

```
   RF ADJUST MODE
A1F:NV-RAM CONTROL

 Saving ...
```

During data saving

(3) After data transfer is completed, the "Complete" message is displayed on the monitor screen.

The monitor screen at right is displayed when the adjustment data is saved.
The "Load Complete" message is displayed when the adjustment data before adjustment is returned.

```
   RF ADJUST MODE
A1F:NV-RAM CONTROL

 Save Complete
```

Data saving completed

Note: If the power of this unit is turned off without saving the adjustment data in an NV-RAM after adjustment is completed, the adjustment data in the RF system returns to the preadjustment state.

5-9. AUDIO/VIDEO SYSTEM ADJUSTMENT MODE (A2: AUDIO/VIDEO ADJUST)

This section describes the "A2: AUDIO/VIDEO ADJUST" mode.
For how to activate and terminate the maintenance mode, refer to page 5-3.

Caution: Do not change the adjustment data carelessly. This causes a trouble. To adjust the data, adjust it according to the operation described in section 6 or 8 of this manual.
[For the BKDW-506/505 (optional equipment), refer to the Installation Manual.]
For the items not described in section 6 or 8, perform each adjustment according to the adjustment in the Maintenance Manual Part 2, Volume-1.

If the adjustment data has been changed carelessly, execute the "ALL DATA PREVIOUS" mode in A2F: NV-RAM CONTROL or turn off the power of this unit without executing the A2F: NV-RAM CONTROL.
Never execute the "SAVE ALL ADJUST DATA" mode.

a) Operation during manual adjustment (not including "A24: INPUT CF DETECT")

(1) Set the "*" mark to the item to be adjusted using a serach dial (JOG mode).

(2) Turn the search dial to change the data while pressing and holding the JOG (or SHUTTLE) button.

FWD (↻): Increases the data value. (FF is followed by 00.)
REV (↺): Decreases the data value. (00 is followed by FF.)

(3) For any other items, repeat steps (1) and (2).

(4) After adjustment is completed, press the MENU button (or switch S301 on the SS board) to return to the AUDIO/VIDEO ADJUST MODE menu screen.

(5) To save the adjustment data in an NV-RAM, execute the "A2F: NV-RAM CONTROL" mode.

b) Operation during automatic adjustment (for "A24: INPUT CF DETECT")

(1) Change "Manual" to "Auto".

Set the "*" mark to "Manual" using a search dial. After that, turn the search dial in the forward (↻) direction while pressing and holding the JOG (or SHUTTLE) button.
The "Auto (Push SET button)" message is then displayed on the monitor screen.

(2) Press the SET button (or switch S300 on the SS board) to initiate the adjustment. The "Auto Adjusting ..." message is then displayed on the monitor screen.

(3) After adjustment is completed, the "Auto Adjust Complete" message is displayed on the monitor screen.

(4) Press the MENU button (or switch S301 on the SS board) to return to the AUDIO/VIDEO ADJUST menu screen.

(5) To save the adjustment data in an NV-RAM, execute the "A2F: NV-RAM CONTROL" mode.

c) A2F: NV-RAM CONTROL

This mode saves the audio/video system adjustment data in an NV-RAM or returns it to the preadjustment state without saving the audio/video system adjustment data.

Caution: Once the audio/video system adjustment data is saved in an NV-RAM, it cannot return to the preadjustment state.

(1) Using a search dial (JOG mode), set the "*" mark as follows:
Set it to "SAVE ALL ADJUST DATA" when the adjustment data after adjustment is saved.
Set it to "ALL DATA PREVIOUS" when the adjustment data before adjustment is returned.

(2) Press the SET button (or switch S300 on the SS board) to initiate the data transfer. The monitor screen at right is displayed when the adjustment data is saved. The "Loading ..." message is displayed when the adjustment data before adjustment is returned.

(3) After data transfer is completed, the "Complete" message is displayed on the monitor screen.

The monitor screen at right is displayed when the adjustment data is saved.
The "Load Complete" message is displayed when the adjustment data before adjustment is returned.

```
AUDIO/VIDEO ADJUST MODE
A2F:NV-RAM CONTROL

*NO OPERATION
 SAVE ALL ADJUST DATA
 ALL DATA PREVIOUS
```

(1) DIAL
(2) SET or S300

```
AUDIO/VIDEO ADJUST MODE
A2F:NV-RAM CONTROL

 Saving ...
```

During data saving

```
AUDIO/VIDEO ADJUST MODE
A2F:NV-RAM CONTROL

 Save Complete
```

Data saving completed

Note: If the power of this unit is turned off without saving the adjustment data in an NV-RAM after adjustment is completed, the adjustment data in the audio/video system returns to the preadjustment state.

5-9. AUDIO/VIDEO SYSTEM ADJUSTMENT MODE

For DVW-A500P/500P

Note: The data value displayed in this case is one example.

```
MAINTENANCE MODE

C0 :  SERVO/DT     CHECK
C1 :     RF        CHECK
C2 : AUDIO/VIDEO   CHECK
C3 : BETACAM PB    CHECK
C4 :   OTHERS      CHECK
A0 :  SERVO/DT    ADJUST
A1 :     RF       ADJUST
*A2 : AUDIO/VIDEO ADJUST
A3 : BETACAM PB   ADJUST
```

(Above screen is displayed for the DVW-A500P.)

A2 SET →

← MENU

```
AUDIO/VIDEO ADJUST MODE

*A20:VPR VR 0
 A21:VPR VR 1
 A22:VPR VR 1 (LOOP)
 A23:DIF VR
 A24:INPUT CF DETECT
 A25:DEC VR
 A26:DEC VR (LOOP)
 A2F:NV-RAM CONTROL
```

The three menus below are not displayed when the BKDW-506 is not installed.
A24: INPUT CF DETECT
A25: DEC VR
A26: DEC VR (LOOP)

A20: VPR VR 0
Adjusts the reference signal system and video output system on the VPR-1 board.

```
AUDIO/VIDEO ADJUST MODE
A20:VPR VR 0

*PB CK27 DL          55
 REF 1st FLD DET     55
 REF SCH DET         55
 INT 4FSC FREQ       55
 VIDEO 1/2 LEVEL     55
 VIDEO 3 LEVEL       55
 Y OUTPUT LEVEL      55
 R-Y OUTPUT LEVEL    55
 B-Y OUTPUT LEVEL    55
```

A20 SET → / A24 SET →
MENU → / MENU ←

```
AUDIO/VIDEO ADJUST MODE
A24:INPUT CF DETEC
*Mnual

 INPUT CF DETEC      55

      SCH   0
      SFTZ  0
      SFTP  0
```

A24: INPUT CF DETECT
Adjustment menu for BKDW-506 (optional equipment).
Adjusts the color frame detection timing of a composite video signal.

A21: VPR VR 1
Adjusts the video input system (component video) on the VPR-1 board.

```
AUDIO/VIDEO ADJUST MODE
A21:VPR VR 1

*Y INPUT LEVEL       55
 R-Y INPUT LEVEL     55
 B-Y INPUT LEVEL     55
 Y INPUT PHASE       55
 Y/R-Y INPUT DELAY   55
 Y/B-Y INPUT DELAY   55
 Y FREQ COMP         55
 R-Y FREQ COMP       55
 B-Y FREQ COMP       55
```

A21 SET → / A25 SET →
MENU → / MENU ←

```
AUDIO/VIDEO ADJUST MODE
A25:DEC VR

*VIDEO GAIN          55
 AGC VIDEO GAIN      55
 VIDEO FREQ COMP     55
```

A25: DEC VR
Adjustment menu for BKDW-506 (optional equipment).
Adjusts the input amplifier gain, AGC gain, and frequency characteristic.

A22: VPR VR 1 (LOOP)
Adjusts the video input system (component video) on the VPR-1 board with the multiloop function activated automatically.

```
AUDIO/VIDEO ADJUST MODE
A22:VPR VR 1 (LOOP)

*Y INPUT LEVEL       55
 R-Y INPUT LEVEL     55
 B-Y INPUT LEVEL     55
 Y INPUT PHASE       55
 Y/R-Y INPUT DELAY   55
 Y/B-Y INPUT DELAY   55
 Y FREQ COMP         55
 R-Y FREQ COMP       55
 B-Y FREQ COMP       55
```

A22 SET → / A26 SET →
MENU → / MENU ←

```
AUDIO/VIDEO ADJUST MODE
A26:DEC VR (LOOP)

*VIDEO GAIN          55
 VIDEO FREQ COMP     55
```

A26: DEC VR (LOOP)
Adjustment menu for BKDW-506 (optional equipment).
Adjusts the input amplifier gain and frequency characteristic with the multiloop function activated automatically.

A23: DIF VR
Adjusts the frequency of the voltage-controlled oscillator (VCO) on the DIF-16 board.

```
AUDIO/VIDEO ADJUST MODE
A23:DIF VR

*D1 DEC VCO          55
 D1 ENC1 VCO         55
 D1 ENC2 VCO         55
```

A23 SET → / A2F SET →
MENU → / MENU ←

```
AUDIO/VIDEO ADJUST MODE
A2F:NV-RAM CONTROL

*NO OPERATION
 SAVE ALL ADJUST DATA
 ALL DATA PREVIOUS
```

A2F: NV-RAM CONTROL
Saves the audio/video system adjustment data in an NV-RAM or returns it to the preadjustment data.

5-9. AUDIO/VIDEO SYSTEM ADJUSTMENT MODE

For DVW-A500/500

Note: The data value displayed in this case is one example.

```
MAINTENANCE MODE

C0 :  SERVO/DT     CHECK
C1 :     RF        CHECK
C2 : AUDIO/VIDEO   CHECK
C3 : BETACAM PB    CHECK
C4 :   OTHERS      CHECK
A0 :  SERVO/DT    ADJUST
A1 :     RF       ADJUST
*A2 : AUDIO/VIDEO ADJUST
A3 : BETACAM PB   ADJUST
```

(Above screen is displayed for the DVW-A500.)

A2 SET →

← MENU

```
AUDIO/VIDEO ADJUST MODE

*A20:VPR VR 0
 A21:VPR VR 1
 A22:VPR VR 1 (LOOP)
 A23:DIF VR
 A24:INPUT CF DETECT
 A25:DEC VR
 A26:DEC VR (LOOP)
 A2F:NV-RAM CONTROL
```

The three menus below are not displayed when the BKDW-505 is not installed.
A24: INPUT CF DETECT
A25: DEC VR
A26: DEC VR (LOOP)

A20: VPR VR 0
Adjusts the reference signal system and video output system on the VPR-1 board.

In addition to the screen display at right, the items below are scrolled and displayed.
B-CAM R-Y OUT LEVEL
B-CAM B-Y OUT LEVEL

```
AUDIO/VIDEO ADJUST MODE
A20:VPR VR 0

*PB CK27 DL          55
 REF 1st FLD DET     55
 REF SCH DET         55
 INT 4FSC FREQ       55
 VIDEO 1/2 LEVEL     55
 VIDEO 3 LEVEL       55
 Y OUTPUT LEVEL      55
 R-Y OUTPUT LEVEL    55
 B-Y OUTPUT LEVEL    55
```

A20 SET →
← MENU

A21: VPR VR 1
Adjusts the video input system (component video) on the VPR-1 board.

The items below as well as the screen at right are scrolled and displayed.
Y FREQ COMP
R-Y FREQ COMP
B-Y FREQ COMP

```
AUDIO/VIDEO ADJUST MODE
A21:VPR VR 1

*Y INPUT LEVEL       55
 R-Y INPUT LEVEL     55
 B-Y INPUT LEVEL     55
 Y INPUT PHASE       55
 Y/R-Y INPUT DELAY   55
 Y/B-Y INPUT DELAY   55
 B-CAM Y IN LEVEL    55
 B-CAM R-Y IN LEVEL  55
 B-CAM B-Y IN LEVEL  55
```

A21 SET →
← MENU

A22: VPR VR 1 (LOOP)
Adjusts the video input system (component video) on the VPR-1 board with the multiloop function activated automatically.

The items below as well as the screen at right are scrolled and displayed.
Y FREQ COMP
R-Y FREQ COMP
B-Y FREQ COMP

```
AUDIO/VIDEO ADJUST MODE
A22:VPR VR 1 (LOOP)

*Y INPUT LEVEL       55
 R-Y INPUT LEVEL     55
 B-Y INPUT LEVEL     55
 Y INPUT PHASE       55
 Y/R-Y INPUT DELAY   55
 Y/B-Y INPUT DELAY   55
 B-CAM Y IN LEVEL    55
 B-CAM R-Y IN LEVEL  55
 B-CAM B-Y IN LEVEL  55
```

A22 SET →
← MENU

A23: DIF VR
Adjusts the frequency of the voltage-controlled oscillator (VCO) on the DIF-16 board.

```
AUDIO/VIDEO ADJUST MODE
A23:DIF VR

*D1 DEC VCO          55
 D1 ENC1 VCO         55
 D1 ENC2 VCO         55
```

A23 SET →
← MENU

```
AUDIO/VIDEO ADJUST MODE
A24:INPUT CF DETEC
*Mnual

 INPUT CF DETEC      55

      SCH    0
      SFTZ   0
      SFTP   0
```

A24 SET →
← MENU

A24: INPUT CF DETECT
Adjustment menu for BKDW-505 (optional equipment).
Adjusts the color frame detection timing of a composite video signal.

```
AUDIO/VIDEO ADJUST MODE
A25:DEC VR

*VIDEO GAIN          55
 AGC VIDEO GAIN      55
 VIDEO FREQ COMP     55
```

A25 SET →
← MENU

A25: DEC VR
Adjustment menu for BKDW-505 (optional equipment).
Adjusts the input amplifier gain, AGC gain, and frequency characteristic.

```
AUDIO/VIDEO ADJUST MODE
A26:DEC VR (LOOP)

*VIDEO GAIN          55
 VIDEO FREQ COMP     55
```

A26 SET →
← MENU

A26: DEC VR (LOOP)
Adjustment menu for BKDW-505 (optional equipment).
Adjusts the input amplifier gain and frequency characteristic with the multiloop function activated automatically.

```
AUDIO/VIDEO ADJUST MODE
A2F:NV-RAM CONTROL

*NO OPERATION
 SAVE ALL ADJUST DATA
 ALL DATA PREVIOUS
```

A2F SET →
← MENU

A2F: NV-RAM CONTROL
Saves the audio/video system adjustment data in an NV-RAM or returns it to the preadjustment data.

5-79

5-10. BETACAM PB SYSTEM ADJUSTMENT MODE (For DVW-A500P/A500) (A3: BETACAM PB ADJUST)

This section describes the "A3: BEATCAM PB ADJUST" mode.
For how to activate and terminate the maintenance mode, refer to page 5-3.

Caution: Do not change the adjustment data carelessly. This causes a trouble. To adjust the data, adjust it according to the operation described in section 6 or 8 of this manual.
For the items not described in section 6 or 8, perform each adjustment according to the adjustment in the Maintenance Manual Part 2, Volume-1.

If the adjustment data has been changed carelessly, execute the "ALL DATA PREVIOUS" mode in A3F: NV-RAM CONTROL or turn off the power of this unit without executing the A3F: NV-RAM CONTROL.
Never execute the "SAVE ALL ADJUST DATA" mode.

a) Operation during manual adjustment (data setting)

(1) If the specified alignment tape has already been inserted and the specified tape portion has been played back, steps (2),(3), and (4) are omitted.
For the item in which the playback of an alignment tape is not required, proceed to step (5).

(2) Press the SET button (or switch S300 on the SS board). At that time, the unit temporarily exits the maintenance mode. This enables the normal operation.
(Prompt "■" is displayed in the upper-right position of the superimposed screen, and the time counter is put into the normal state.)

(3) Insert the specified alignment tape into this unit and play back it from the specified tape portion.
(For the guard band width adjustment in A35: DM VR 4, put the unit into the STOP mode.)

(4) Press the MENU button (or switch S301 on the SS board) to return to the maintenance mode.
(The "■" prompt display disappears on the screen, and the time counter displays the menu number.)

(5) Set the "*" mark to the item to be adjusted using a serach dial (JOG mode).

(6) Turn the search dial to change the data while pressing and holding the JOG (or SHUTTLE) button.

FWD (↻): Increases the data value. (FF is followed by 00.)
REV (↺): Decreases the data value. (00 is followed by FF.)

(7) For any other items, repeat steps (1) through (6).

(8) After adjustment is completed, press the MENU button (or switch S301 on the SS board) to return to the BETACAM PB ADJUST mode menu screen.

(9) To save the adjustment data in an NV-RAM, execute the "A3F: NV-RAM CONTROL" mode.

b) A3F: NV-RAM CONTROL

This mode saves the Betacam PB system adjustment data in an NV-RAM or returns it to the preadjustment state without saving the Betacam PB system adjustment data.

Caution: Once the Betacam PB system adjustment data is saved in an NV-RAM, it cannot return to the preadjustment state.

(1) Using a search dial (JOG mode), set the "*" mark as follows:
Set it to "SAVE ALL ADJUST DATA" when the adjustment data after adjustment is saved.
Set it to "ALL DATA PREVIOUS" when the adjustment data before adjustment is returned.

(2) Press the SET button (or switch S300 on the SS board) to initiate the data transfer.
The monitor screen at right is displayed when the adjustment data is saved. The "Loading ..." message is displayed when the adjustment data before adjustment is returned.

(3) After data transfer is completed, the "Complete" message is displayed on the monitor screen.

The monitor screen at right is displayed when the adjustment data is saved.
The "Load Complete" message is displayed when the adjustment data before adjustment is returned.

```
 BETACAM PB ADJUST MODE
A3F:NV-RAM CONTROL

*NO OPERATION
 SAVE ALL ADJUST DATA
 ALL DATA PREVIOUS
```

(1) DIAL
(2) SET or S300

```
 BETACAM PB ADJUST MODE
A3F:NV-RAM CONTROL

 Saving ...
```

During data saving

```
 BETACAM PB ADJUST MODE
A3F:NV-RAM CONTROL

 Save Complete
```

Data saving completed

Note: If the power of this unit is turned off without saving the adjustment data in an NV-RAM after adjustment is completed, the adjustment data in the Betacam PB system returns to the preadjustment state.

5-10. BETACAM PB SYSTEM ADJUSTMENT MODE (For DVW-A500P/A500)

Exclusive mode for the DVW-A500P/A500

Note: The data value displayed in this case is one example.

```
MAINTENANCE MODE

C0 :  SERVO/DT     CHECK
C1 :     RF        CHECK
C2 : AUDIO/VIDEO   CHECK
C3 : BETACAM PB    CHECK
C4 :   OTHERS      CHECK
A0 :  SERVO/DT    ADJUST
A1 :     RF       ADJUST
A2 : AUDIO/VIDEO  ADJUST
*A3 : BETACAM PB  ADJUST
```

A3 SET →

← MENU

```
BETACAM PB ADJUST MODE

*A30:EQ VR
 A31:DM VR 0
 A32:DM VR 1
 A33:DM VR 2
 A34:DM VR 3
 A35:DM VR 4
 A36:DM VR 5
 A37:TBC VR
 A3F:NV-RAM CONTROL
```

A3F SET →

← MENU

```
BETACAM PB ADJUST MODE
A3F:NV-RAM CONTROL

*NO OPERATION
 SAVE ALL ADJUST DATA
 ALL DATA PREVIOUS
```

A3F: NV-RAM CONTROL
Saves the Betacam PB system adjustment data in an NV-RAM or returns it to the preadjustment data.

A30: EQ VR
Adjusts the gain of a Betacam PB RF amplifier (on the EQ board).

```
BETACAM PB ADJUST MODE
A30:EQ VR

*RF GAIN METAL-Y-A   55
 RF GAIN METAL-Y-B   55
 RF GAIN METAL-C-A   55
 RF GAIN METAL-C-B   55
 RF GAIN OXIDE-Y-A   55
 RF GAIN OXIDE-Y-B   55
 RF GAIN OXIDE-C-A   55
 RF GAIN OXIDE-C-B   55
```

A30 SET →

← MENU

A31: DM VR 0
Adjusts the gain of a Betacam PB RF amplifier (on the DM-89 board).

```
BETACAM PB ADJUST MODE
A31:DM VR 0

*RF LEVEL METAL-Y-A   55
 RF LEVEL METAL-Y-B   55
 RF LEVEL METAL-C-A   55
 RF LEVEL METAL-C-B   55
 RF LEVEL OXIDE-Y-A   55
 RF LEVEL OXIDE-Y-B   55
 RF LEVEL OXIDE-C-A   55
 RF LEVEL OXIDE-C-B   55
```

A31 SET →

← MENU

A32: DM VR 1
Adjusts the frequencey characteristic of a primary cosine equalizer.

```
BETACAM PB ADJUST MODE
A32:DM VR 1

*EQ1 METAL-Y-A       55
 EQ1 METAL-Y-B       55
 EQ1 METAL-C-A       55
 EQ1 METAL-C-B       55
 EQ1 OXIDE-Y-A       55
 EQ1 OXIDE-Y-B       55
 EQ1 OXIDE-C-A       55
 EQ1 OXIDE-C-B       55
```

A32 SET →

← MENU

A33: DM VR 2
Adjusts the frequencey characteristic of a secondary cosine equalizer (main).

```
BETACAM PB ADJUST MODE
A33:DM VR 2

*MAIN METAL-Y-A      55
 MAIN METAL-Y-B      55
 MAIN METAL-C-A      55
 MAIN METAL-C-B      55
 MAIN OXIDE-Y-A      55
 MAIN OXIDE-Y-B      55
 MAIN OXIDE-C-A      55
 MAIN OXIDE-C-B      55
```

A33 SET →

← MENU

A34 SET →

← MENU

```
BETACAM PB ADJUST MODE
A34:DM VR 3

*SUB METAL-Y-A       55
 SUB METAL-Y-B       55
 SUB METAL-C-A       55
 SUB METAL-C-B       55
 SUB OXIDE-Y-A       55
 SUB OXIDE-Y-B       55
 SUB OXIDE-C-A       55
 SUB OXIDE-C-B       55
```

A34: DM VR 3
Adjusts the frequencey characteristic of a secondary cosine equalizer (sub).

A35 SET →

← MENU

```
BETACAM PB ADJUST MODE
A35:DM VR 4

*GUARD BAND METAL-Y  55
 GUARD BAND METAL-C  55
 GUARD BAND OXIDE-Y  55
 GUARD BAND OXIDE-C  55
 OMC DC METAL-Y      E4
 OMC DC METAL-C      D0
 OMC DC METAL-Y      D0
 OMC DC METAL-C      D0
```

A35: DM VR 4
- Adjusts the guard band width.
- Sets the DC offset level of an overmodulation compensator circuit.

A36 SET →

← MENU

```
BETACAM PB ADJUST MODE
A36:DM VR 5

*OMC DC T METAL-Y    00
 OMC DC T METAL-C    00
 DO TH METAL-Y       64
 DO TH METAL-C       64
 DO TH OXIDE-Y       64
 DO TH OXIDE-C       64
 ENV-TH-H            20
 ENV-TH-L            10
```

A36: DM VR 5
- Sets the DC offset level of an overmodulation compensator test circuit.
- Adjusts the dropout threshold level.
- Sets the RF envelope threshold level.

A37 SET →

← MENU

```
BETACAM PB ADJUST MODE
A37:TBC VR

*SQ-Y RZ             4A
 SQ-C RZ             4E
 VISC PHASE          02
```

A37: TBC VR
- Sets the read clock timing.
- Sets the data of the PB VISC phase detector circuit (on the TBC-23 board).

SECTION 6
REPLACEMENT OF POWER BLOCK AND CIRCUIT BOARDS

6-1. GENERAL INFORMATION FOR POWER/BOARDS REPLACEMENT

6-1-1. Index for Board Replacement

[Contents]

Section	Board	Pages
6-1-2.	Plug-in Board	6-2
6-2.	SOPS-1042B	6-5
6-2.	SOPS-1042A	6-5
6-3-1.	SWC-17	6-8
6-3-2.	FP-58	6-11
6-3-3.	VR-152	6-13
6-3-4.	VR-153	6-18
6-3-5.	KY-231	6-20
6-3-6.	DP-176	6-21
6-3-7.	SWC-18	6-22
6-3-8.	SWC-19	6-24
6-3-9.	CP-218	6-26
6-3-10.	CP-220	6-28
6-3-11.	DR-307/200	6-29
6-3-12.	DT-34	6-31
6-3-13.	HN-181	6-32
6-3-14.	HN-184	6-38
6-3-15.	HN-185	6-41

[Index]

Board	Section	Location
AP-28	6-1-2.	⑦
APR-1	6-1-2.	④
CP-218	6-3-9.	㉖
CP-220	6-3-10.	㉗
CUE-1	6-1-2.	⑥
DIF-16	6-1-2.	①
DM-89	6-1-2.	⑧
DP-176	6-3-6.	㉕
DPR-36	6-1-2.	③
DR-307/200	6-3-11.	⑯
DT-34	6-3-12.	⑰
EQ-45	6-1-2.	⑤
FP-58	6-3-2.	⑱
HN-181	6-3-13.	⑫
HN-184	6-3-14.	⑭
HN-185	6-3-15.	⑬
KY-231	6-3-5.	㉔
SOPS-1042A	6-2.	⑪
SOPS-1042B	6-2.	⑪
SS-52	6-1-2.	⑮
SWC-17	6-3-1.	㉑
SWC-18	6-3-7.	㉒
SWC-19	6-3-8.	㉓
TBC-23	6-1-2.	⑩
TBC-24	6-1-2.	⑨
VPR-1	6-1-2.	②
VR-152	6-3-3.	⑲
VR-153	6-3-4.	⑳

[Location]

<Top View>

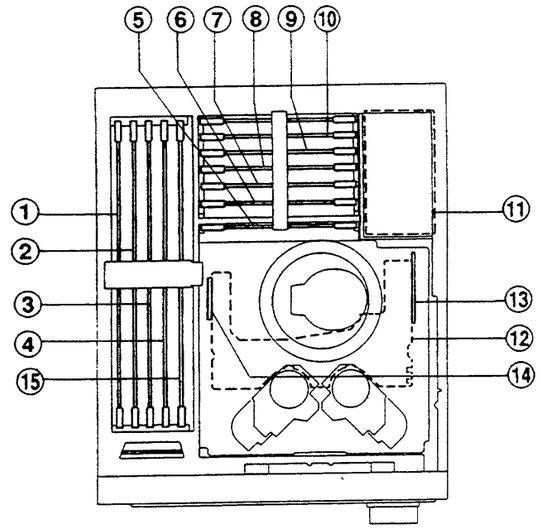

<Bottom View>

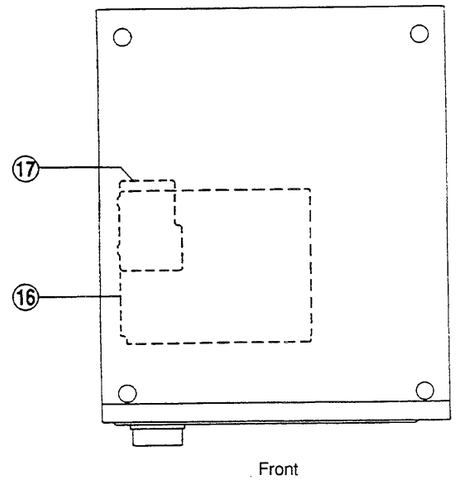

<Front View>

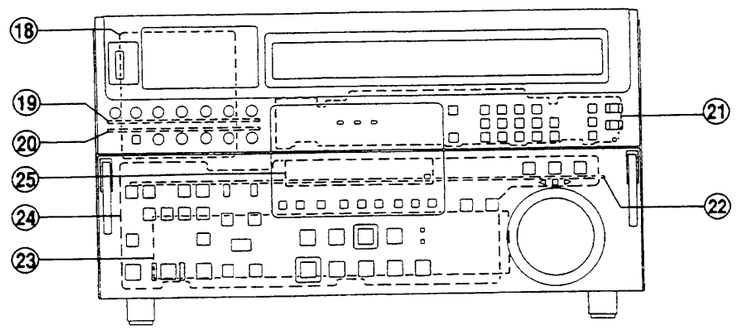

<Rear View>

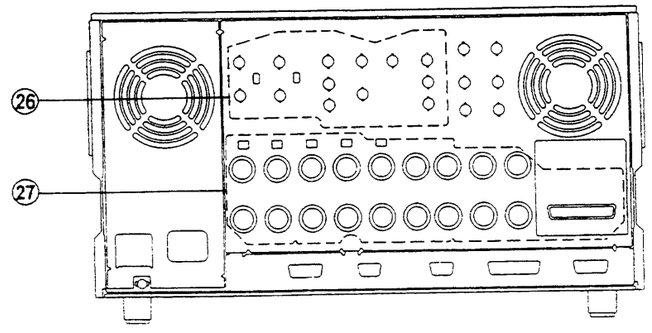

6-1-2. Plug-in Board Pulling Out/ Inserting

6-1-2. Plug-in Board Pulling Out/ Inserting

Always switch off the power before removing or installing the plug-in board.

Pulling out

1. Loosen a screw, and remove the board retainer (L) or (S).

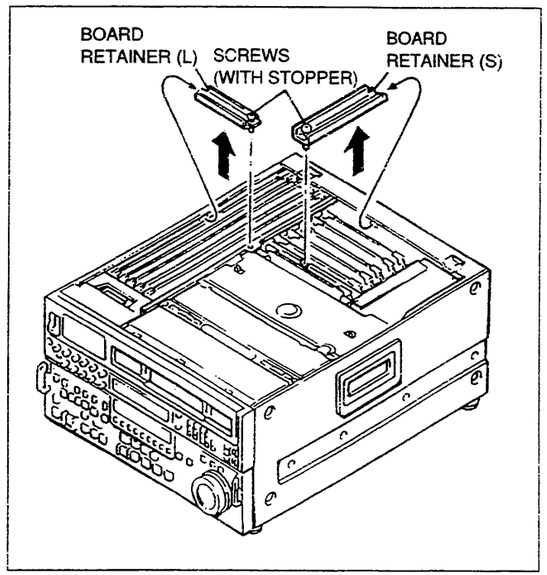

2. Pull up the eject levers on the board in the direction of the arrows when pulling out the board from the connector.

   Note
   Do not try to pull the board by grasping any of the components on the board.
   Pull out the board with equal force for both sides.

3. Disconnect the connected harness.

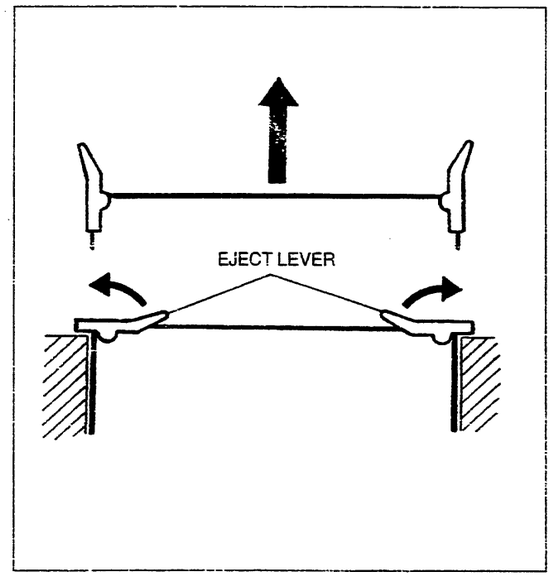

Inserting

1. Connect the disconnected harness.
2. Insert the board after pushing down the eject levers as shown in the figure.

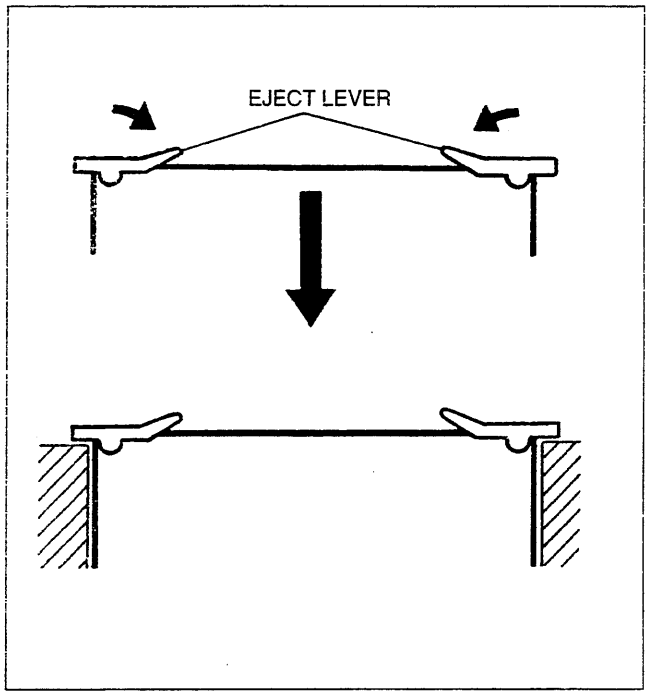

3. Insert the protrusion of the board retainer (L) or (S) into the square hole, and tighten the screw.

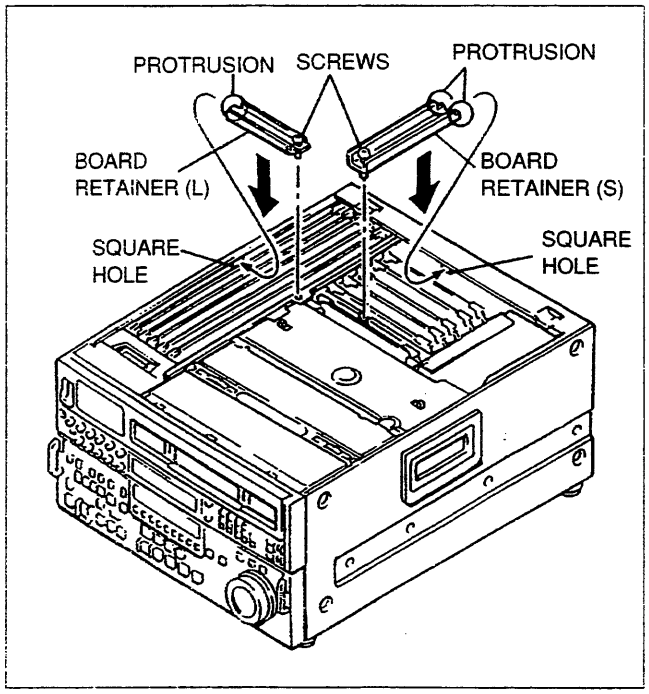

6-1-3. Flexible Card Wire Replacement

Two 36P flexible card wires are used on between DR-307/200 board and HN-181 board. 13P flexible card wires are used on between DR-307/200 board and each reel motor.
When handing the flexible card wire, be very careful not to bend it because this will markedly reduce its life.

Disconnection

1. Pull up the A portions of the connector.

   Note
   Never pull the flexible card wire first.

2. Pull out the flexible card wire from the connector.

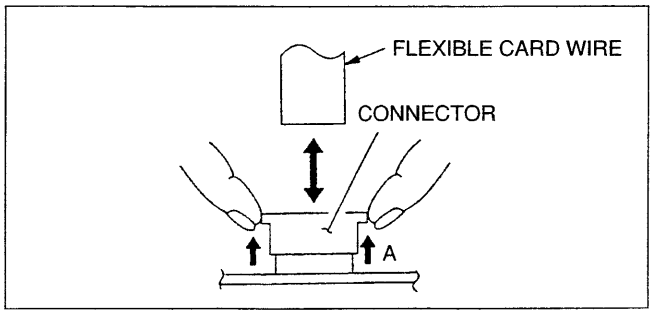

Connection

1. Distinguish the front from back faces of the cable, then insert the cable into the connector.
2. Push down the A portions.

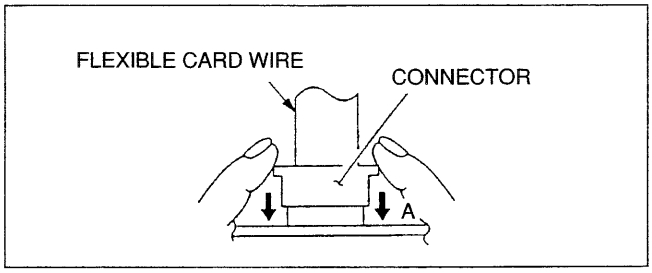

Note
The flexible card wire consists of conductor side and insulator side.The flexible card wire must be inserted with the conductor side facing the correct way. If the flexible card wire is inserted wrongly, the circuit will not operate.

CN214 and CN215 of the HN-181 board do not have a lock mechanism, so these connector's flexible card wire replacement are performed if only pulling out and inserting the cable.

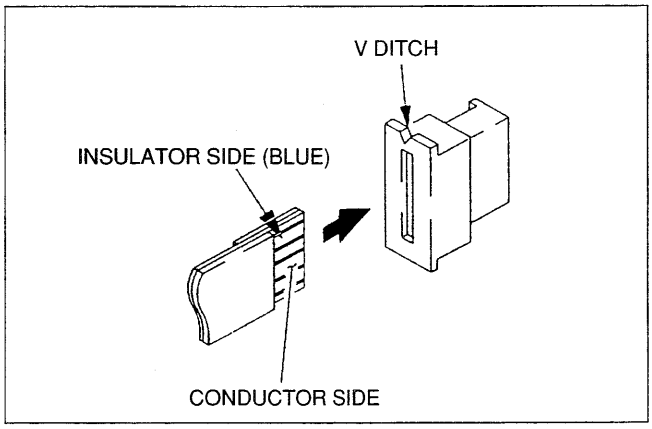

6-2. POWER BLOCK/BOARD REPLACEMENT

After replacing this board, electrical adjustment should be performed.
(Refer to maintenance manual Part 2.)

1. Remove the power panel.
   (Refer to section 1-2-4.)
2. Disconnect six connectors (CN101, CN201, CN202, CN203, CN204 and CN206).

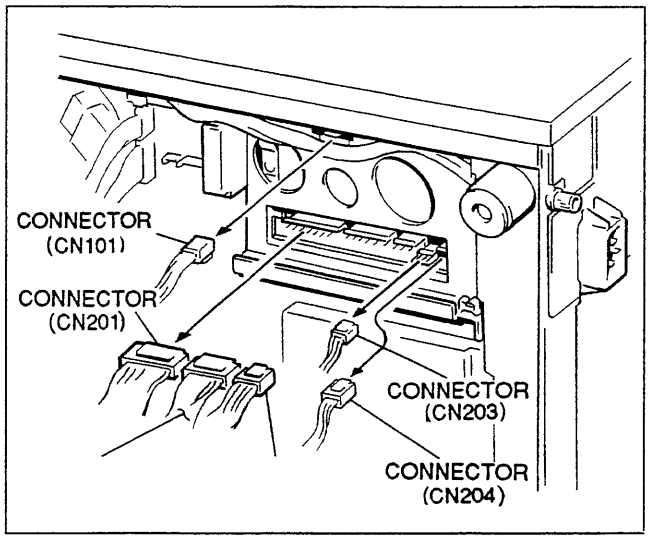

3. Remove two screws, and remove the power block.

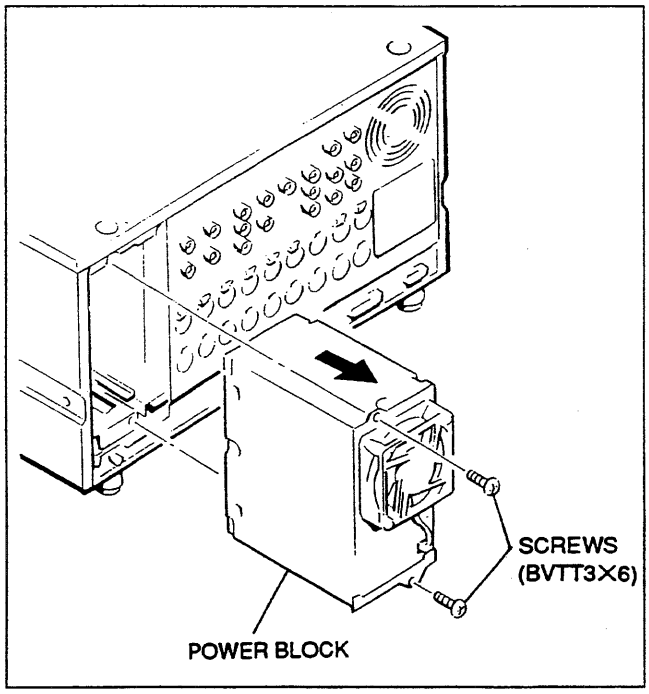

4. Remove three screws, and disassemble the power block.

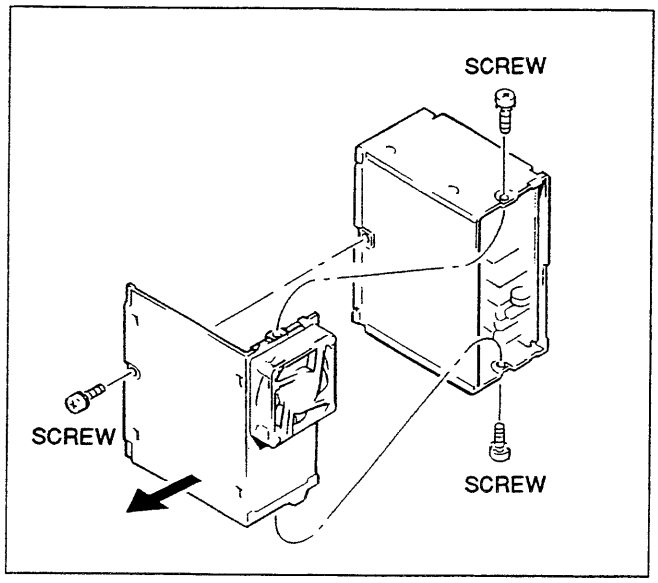

5. Remove four screws, disconnect connector (CN102) and remove the SOPS-1042B board.

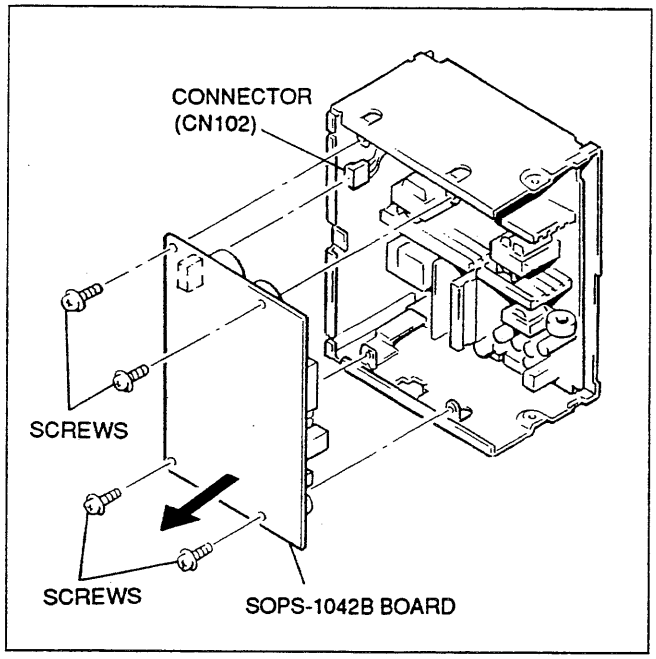

6. Remove three screws, and remove the SOPS-1042A board.

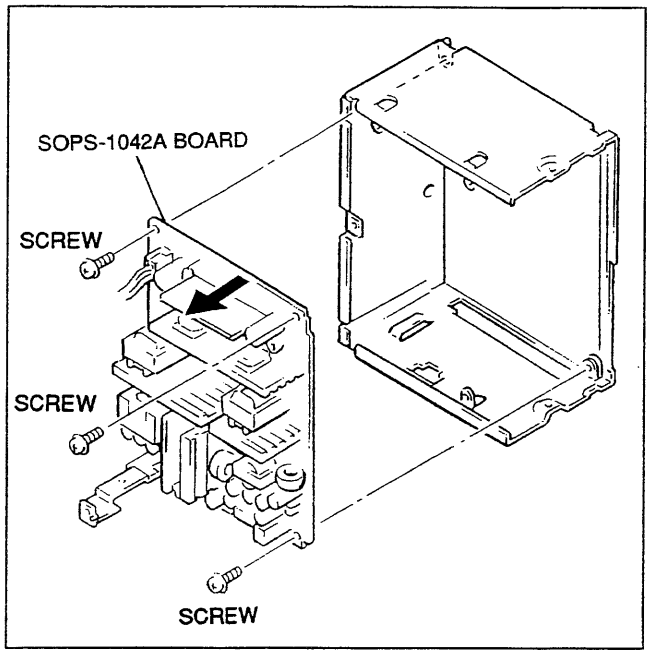

7. Install the power block/board in the reverse order of steps 1 through 6.

6-3. HOW TO REPLACE BOARDS

6-3-1. SWC-17 Board

1. Turn off the power.
2. Remove the upper lid.
   (Refer to section 1-2-1.)
3. Remove the MD plate.
   (Refer to section 1-3.)
4. Remove the cassette compartment assembly.
   (Refer to section 1-2-2.)
5. Remove the upper control panel.
   (Refer to section 1-2-1.)
6. Remove two screws, and remove the SC guide assembly.

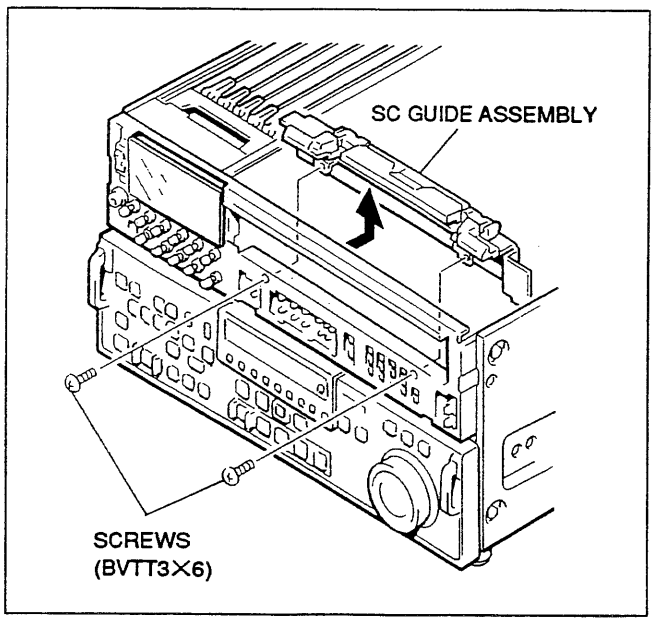

7. Disconnect the connector (CN500), remove six screws and pull out the front (upper) chassis assembly.

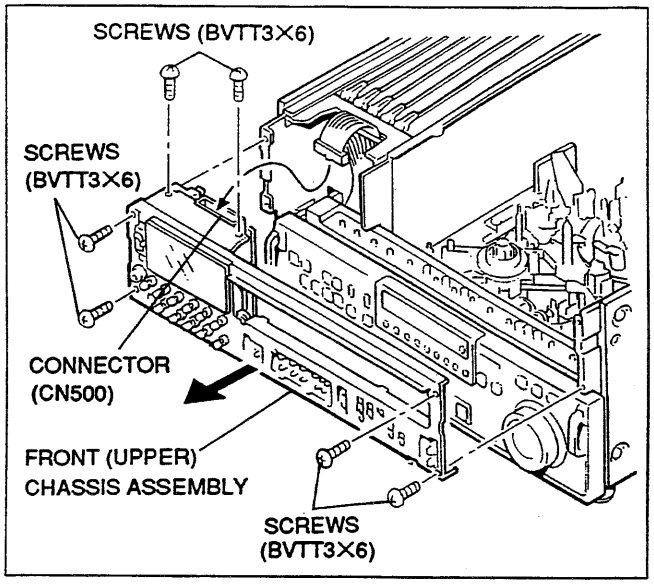

8. Undo the PCB holder, and open the FP-58 board to rear.

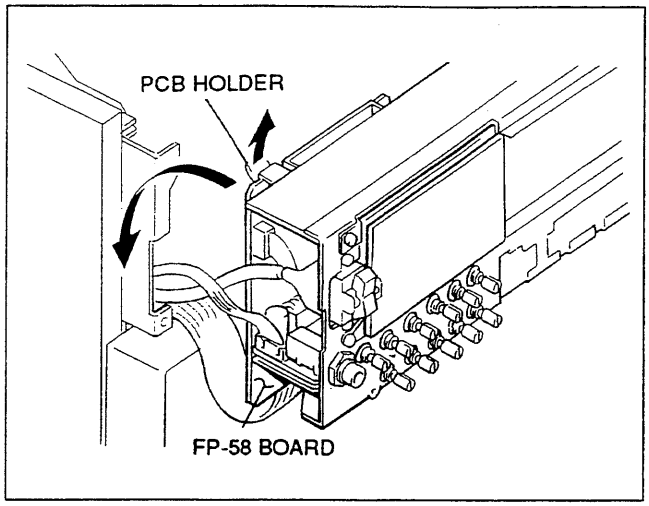

9. Disconnect connector (CN501) on the FP-58 board.

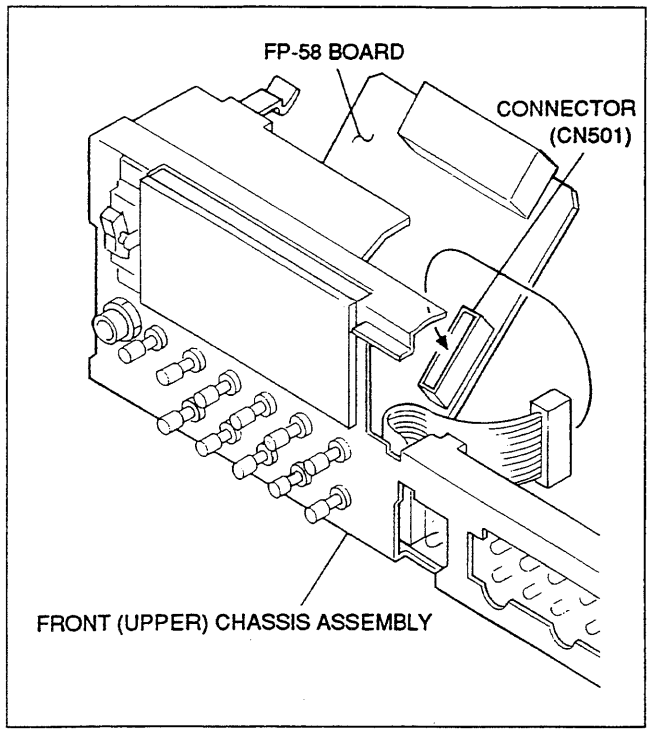

10. Remove three screws, and remove the SWC-17 board by lift the board after inclining to rear.

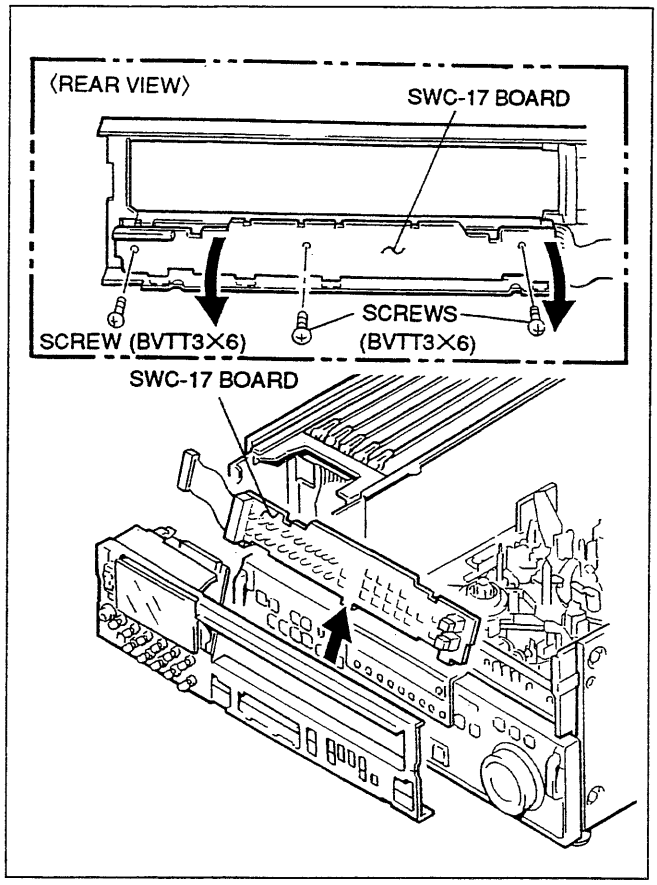

11. Install the SWC-17 board in the reverse order of steps 1 through 10.

6-3-2. FP-58 Board

After replacing this board, preset level adjustment (PROCESS CONTROL switch : REMOTE) should be performed.
(Refer to maintenance manual Part 2.)

1. Turn off the power.
2. Remove the upper lid.
   (Refer to section 1-2-1.)
3. Remove the MD plate.
   (Refer to section 1-3.)
4. Remove the cassette compartment assembly.
   (Refer to section 1-2-2.)
5. Remove the upper control panel.
   (Refer to section 1-2-1.)
6. Remove two screws, and remove the SC guide assembly.
   (Refer to section 6-3-1.)
7. Disconnect connector (CN500), remove six screws and pull out the front (upper) chassis assembly.
   (Refer to section 6-3-1.)
8. Undo the PCB holder, and open the FP-58 board to rear.
9. Disconnect connector (CN501) on the FP-58 board.
   (Refer to section 6-3-1.)
10. Remove two screws, and remove the power switch.
11. Disconnect connector (CN512) on the VR-152 board, connector (CN570) on the SWC-18 board and connector (CN505) on the FP-58 board, and remove the front (upper) chassis assembly.

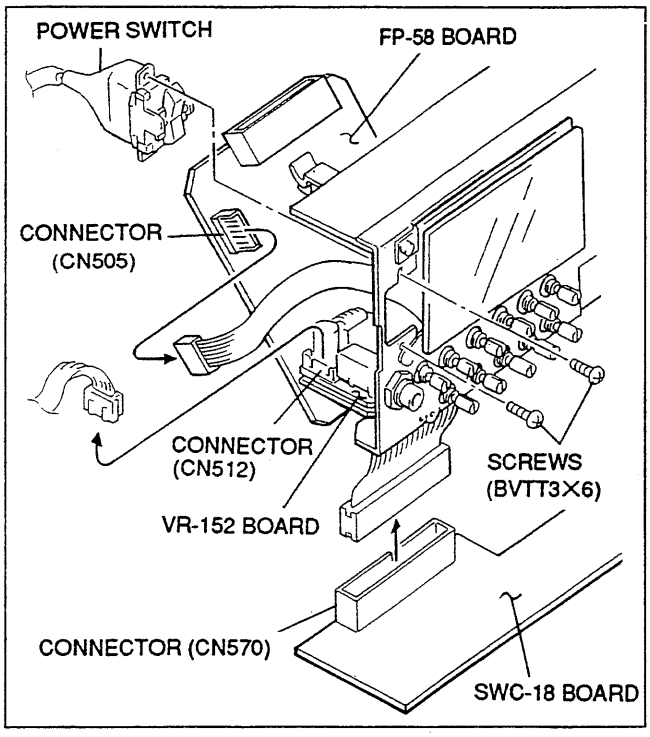

12. Disconnect connector (CN503), and remove the FP-58 board.

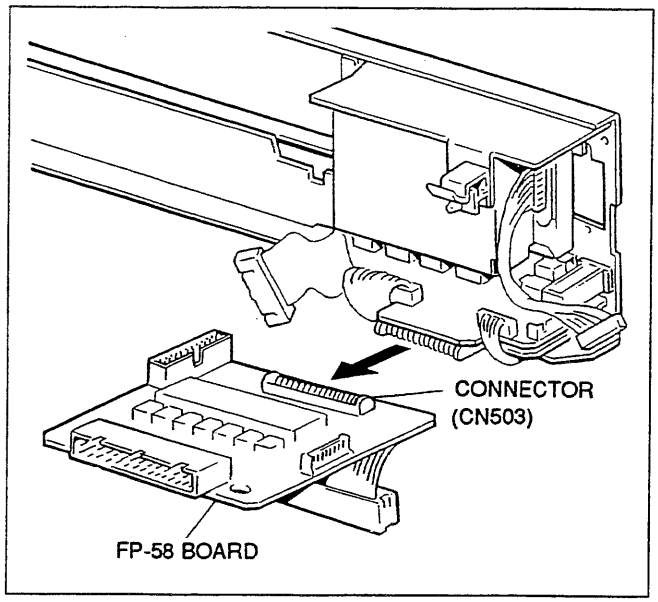

13. Install the FP-58 board in the reverse order of steps 1 through 12.

Note

When connecting connector (CN503), put the protrusions of the connector on the VR-153 board in the hollow of CN503, then stand the FP-58 board.

6-3-3. VR-152 Board

After replacing this board, audio unity level adjustment should be performed.
(Refer to maintenance manual Part 2.)

1. Turn off the power.
2. Remove the upper lid.
   (Refer to section 1-2-1.)
3. Remove the MD plate.
   (Refer to section 1-3)
4. Remove the cassette compartment assembly.
   (Refer to section 1-2-2.)
5. Remove the upper control panel.
   (Refer to section 1-2-1.)
6. Remove two screws, and remove the SC guide assembly.

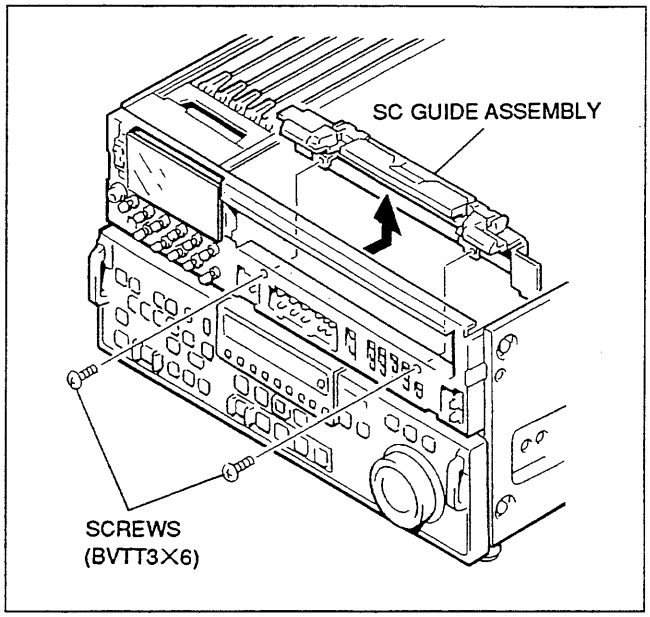

7. Disconnect connector (CN500), remove six screws and pull out the front (upper) chassis assembly.

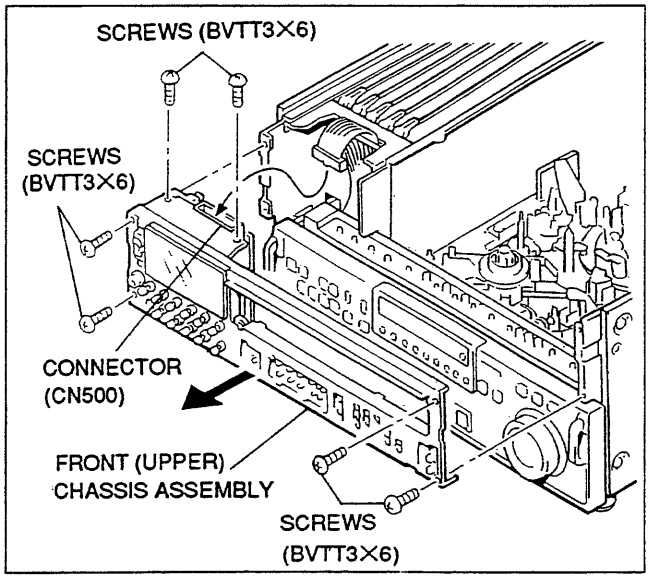

8. Undo the PCB holder, and open the FP-58 board.

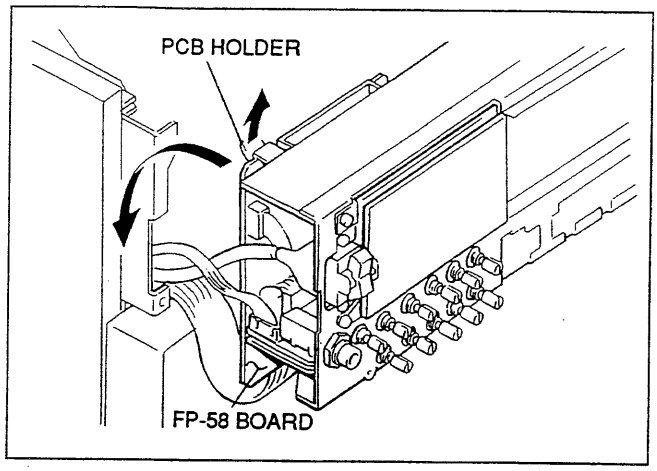

9. Disconnect connector (CN501) on the FP-58 board.

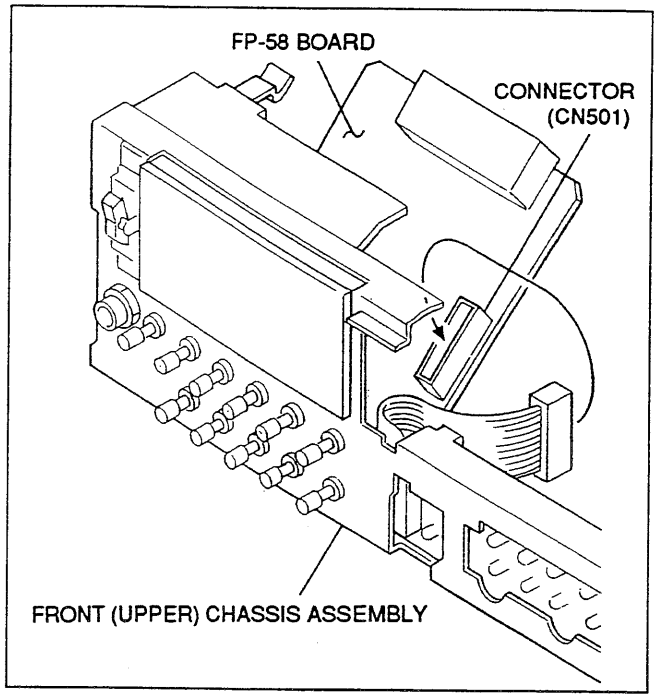

10. Remove two screws, and remove the power switch.
11. Disconnect connector (CN512) on the VR-152 board, connector (CN570) on the SWC-18 board and connector (CN505) on the FP-58 board, and remove the front (upper) chassis assembly.

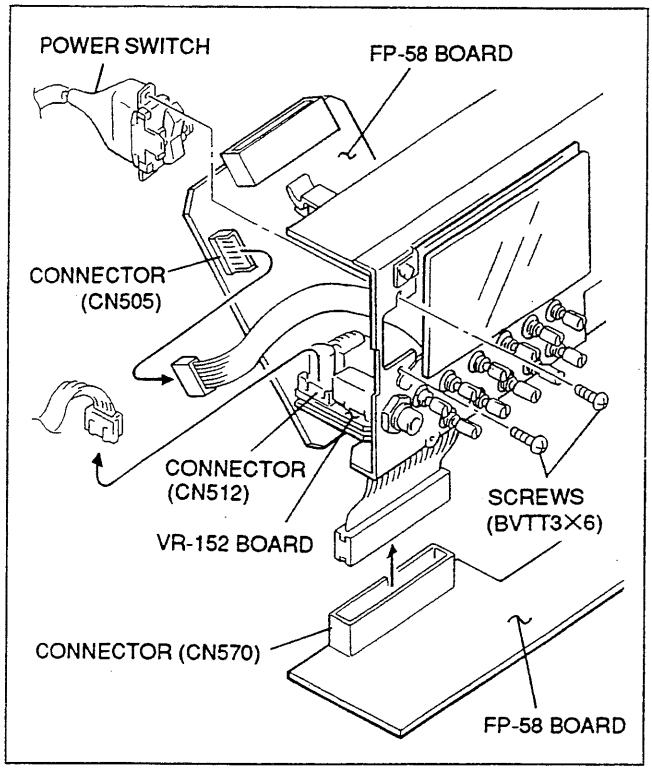

12. Disconnect connector (CN503), and remove the FP-58 board.

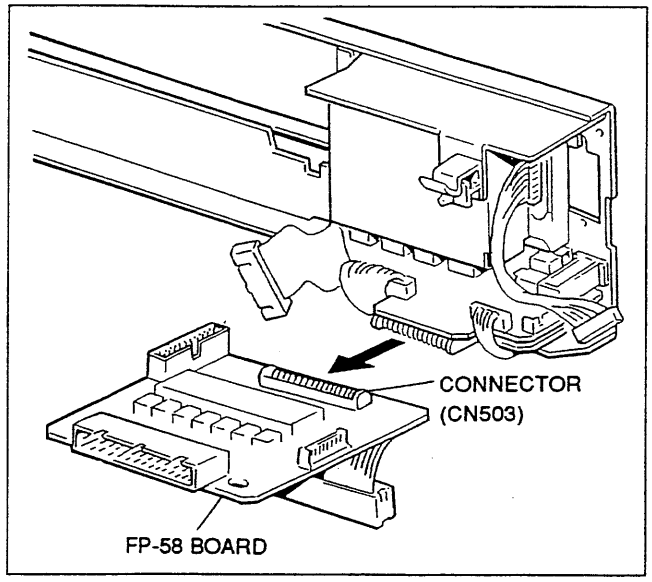

13. Remove the nut of HEADPHONES jack.
14. Remove two screws, and remove the volume bracket.

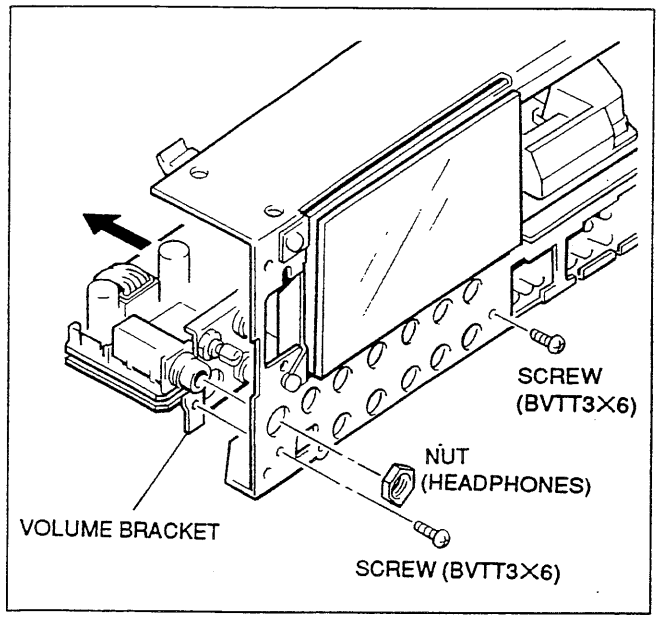

15. Disconnect two connectors (CN510 and CN511).

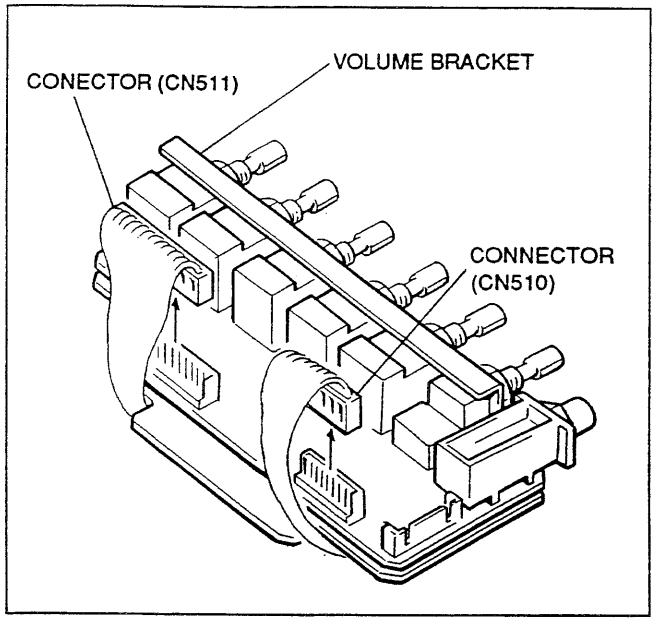

16. Remove six nuts and washers, and remove the VR-152 board.

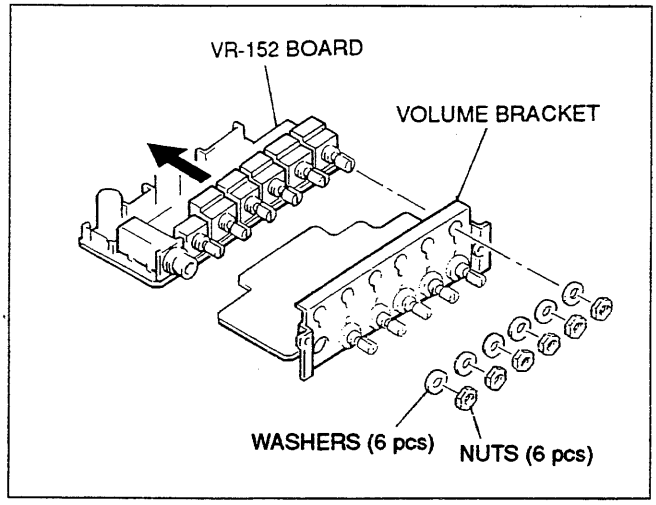

17. Install the VR-152 board in the reverse order of steps 1 through 16.

Note
After installing the nuts, apply locking compound.

6-3-4. VR-153 Board

After replacing this board, audio PB level adjustment should be performed.
(Refer to maintenance manual Part 2.)

1. Turn off the power.
2. Remove the upper lid.
   (Refer to section 1-2-1.)
3. Remove the MD plate.
   (Refer to section 1-3.)
4. Remove the cassette compartment assembly.
   (Refer to section 1-2-2.)
5. Remove the upper control panel.
   (Refer to section 1-2-1.)
6. Remove two screws, and remove the SC guide assembly.
   (Refer to section 6-3-3.)
7. Disconnect connector (CN500), remove six screws and pull out the front (upper) chassis assembly.
   (Refer to section 6-3-3.)
8. Undo the PCB holder, and open the FP-58 board.
   (Refer to section 6-3-3.)
9. Disconnect connector (CN501) on the FP-58 board.
   (Refer to section 6-3-3.)
10. Remove two screws, and remove the power switch.
    (Refer to section 6-3-3.)
11. Disconnect connector (CN512) on the VR-152 board, connector (CN570) on the SWC-18 board and connector (CN505) on the FP-58 board, and remove the front (upper) chassis assembly.
    (Refer to section 6-3-3.)
12. Disconnect connector (CN503), and remove the FP-58 board.
    (Refer to section 6-3-3.)
13. Remove the nut of HEADPHONES jack.
14. Remove two screws, and remove the volume bracket.

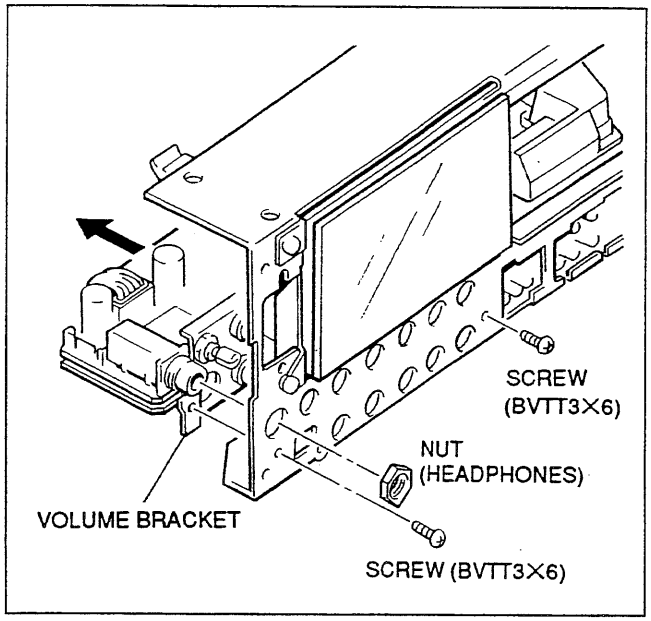

15. Disconnect two connectors (CN522 and CN523).

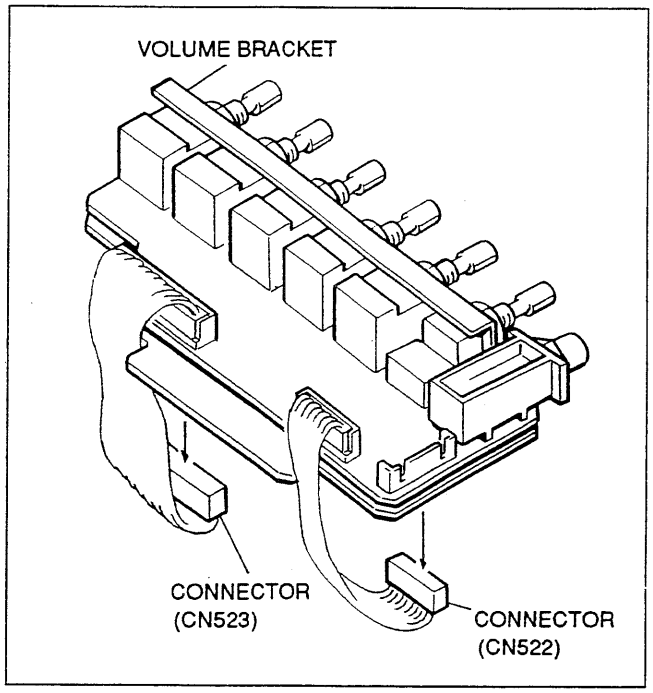

16. Remove five nuts and washers, and remove the VR-153 board.

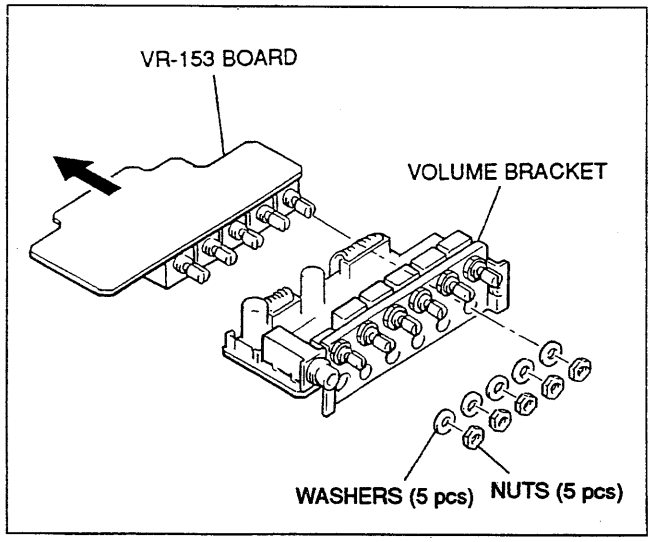

17. Install the VR-153 board in the reverse order of steps 1 through 16.

Note
After installing the nuts, apply locking compound.

6-3-5. KY-231 Board

1. Turn off the power.
2. Remove the lower control panel assembly. (Refer to section 1-9.)
3. Remove five screws as shown in the figure, and remove the KY protector.

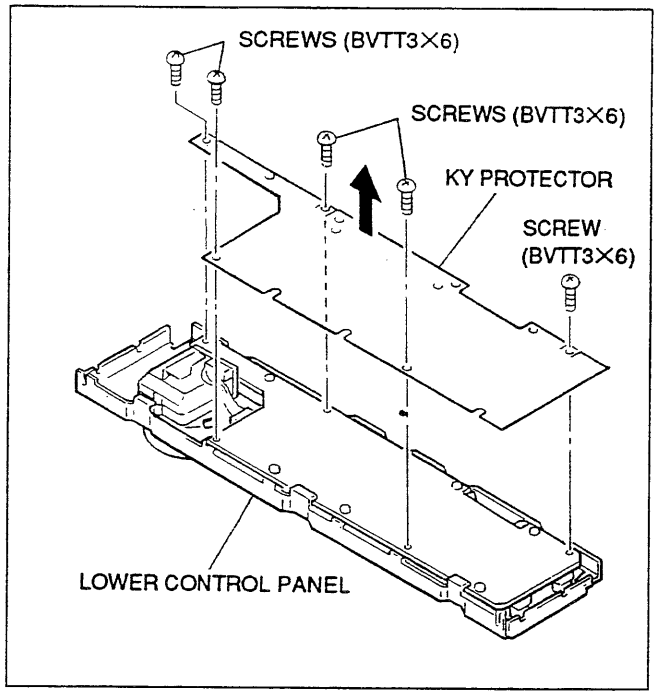

4. Remove six screws as shown in the figure.
5. Disconnect connector (CN592).

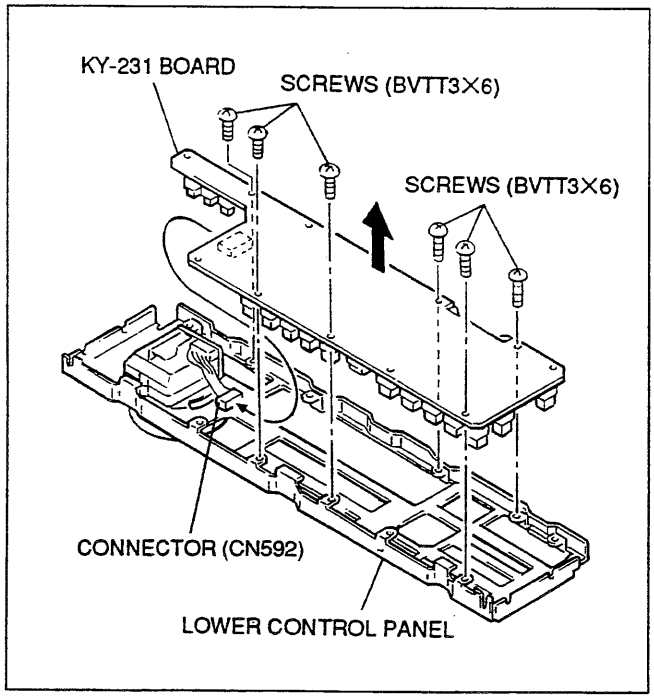

6. Install the KY-231 board in the reverse order of steps 1 through 5.

6-3-6. DP-176 Board

1. Turn off the power.
2. Remove the KY-231 board.
   (Refer to section 6-3-5.)
3. Unsolder connector (CN591), and remove the DP-176 board.

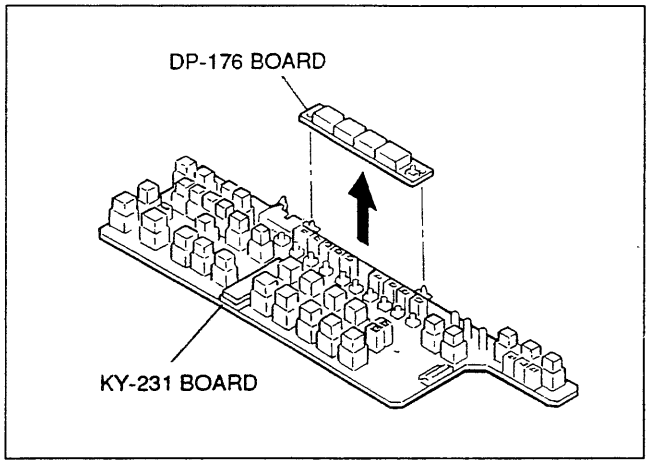

4. Install the DP-176 board in the reverse order of steps 1 through 3.

6-3-7. SWC-18 Board

1. Turn off the power.
2. Pull out the lower control panel assembly.
   (Refer to section 1-8.)
3. Remove two screws, and remove the sub control panel.

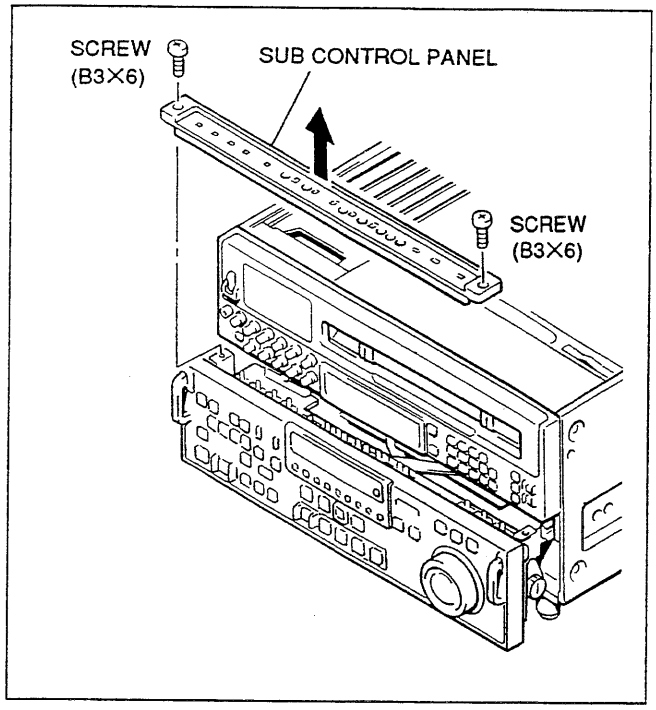

4. Remove three screws.
5. Unlock by sliding the SWC-18 board in the direction of the arrow, and remove the board.

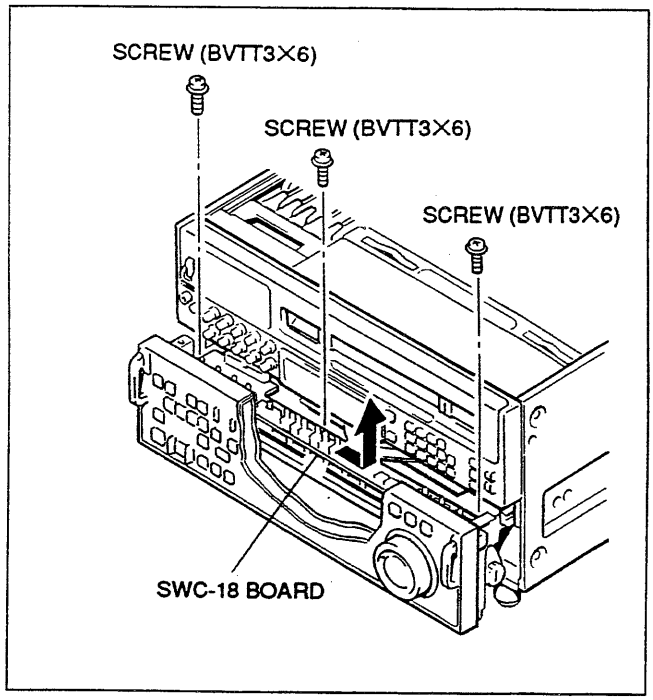

6. Disconnect connector (CN570).

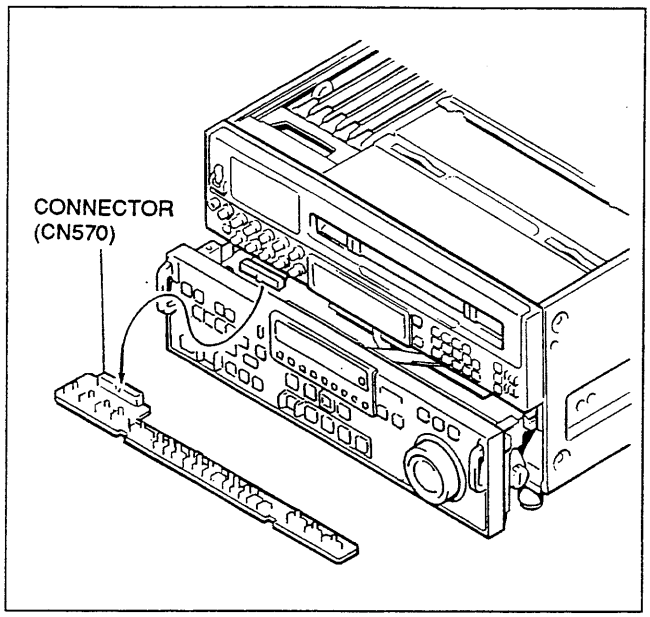

7. Install the SWC-18 board in the reverse order of steps 1 through 6.

6-3-8. SWC-19 Board

After replacing this board, RF (digital) system adjustment should be performed.
(Refer to maintenance manual Part 2.)

1. Turn off the power.
2. Remove the lower control panel assembly.
   (Refer to section 1-9.)
3. Remove two screws, and remove the system setup panel.

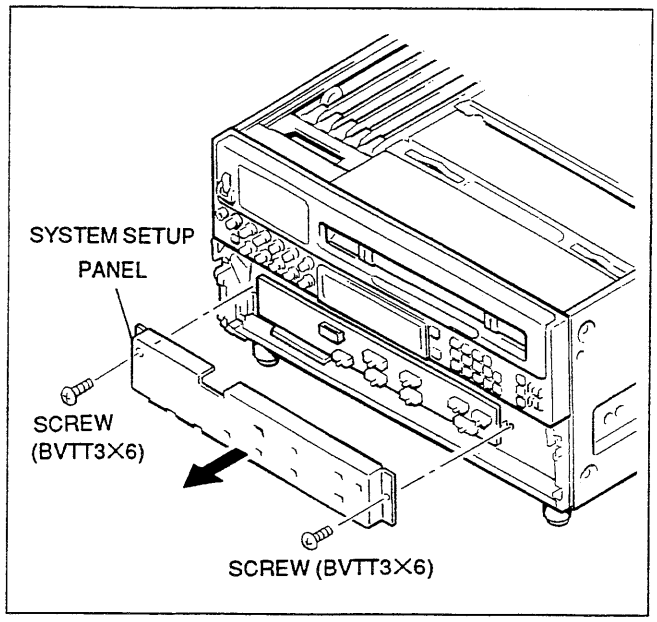

4. Remove four screws, and open the SWC-19 board.

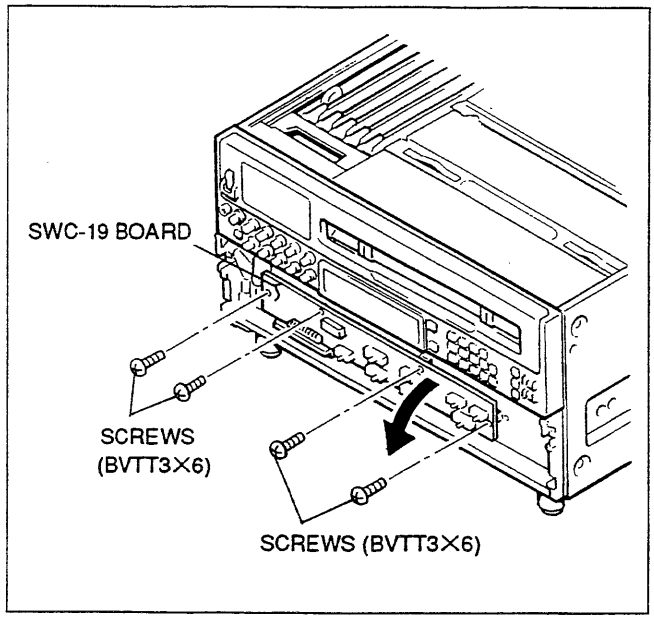

5. Disconnect connector (CN148).

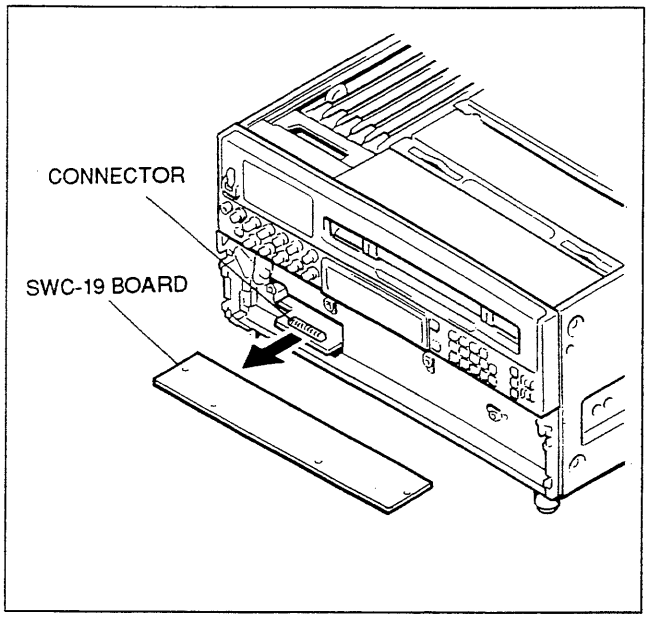

6. Install the SWC-19 board in the reverse order of steps 1 through 5.

6-3-9. CP-218 Board

After replacing this board, analog video input/output level check should be performed.
(Refer to maintenance manual Part 2.)

1. Turn off the power.
2. Remove 12 screws.

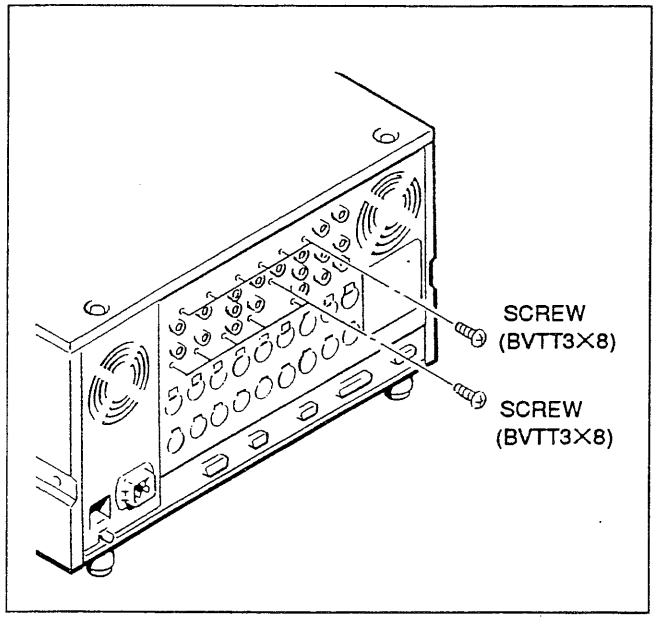

3. Remove the connector panel.
   (Refer to section 1-2-3.)
4. Remove the duct cover.

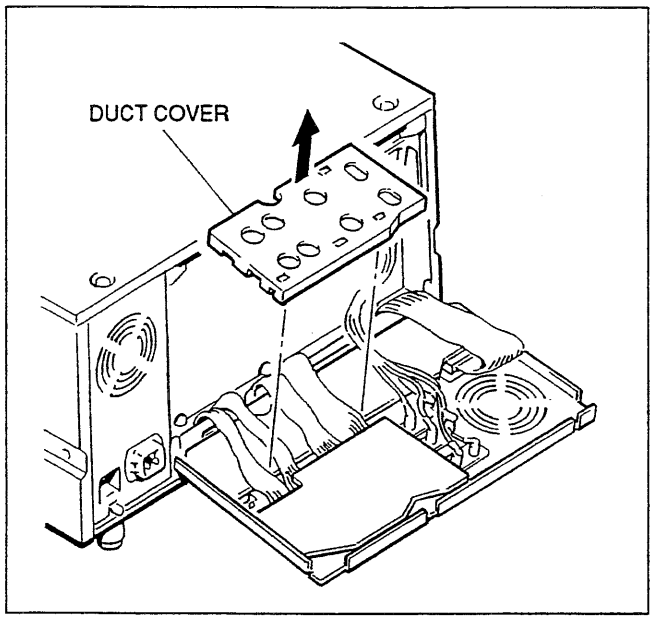

5. Remove a screw, and remove the CP-218 board.

   Note
   At this time, two ornamental plates and two ornamental plate spacers are come off. Do not lose them.

6. Disconnect four connectors (CN412, CN413, CN414 and CN415).

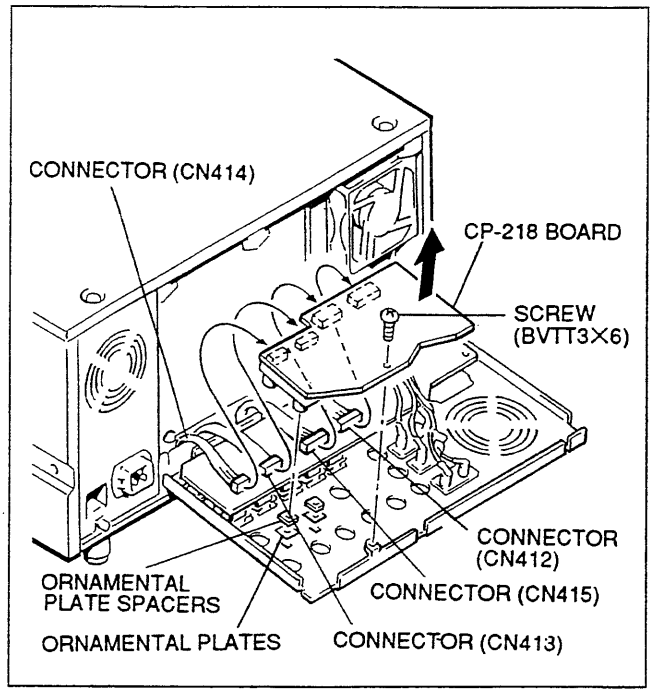

7. Install the CP-218 board in the reverse order of steps 1 through 6.

   Note
   When installing the duct cover, exercise caution so as not to nip the harness.

6-3-10. CP-220 Board

After replacing this board, analog auido input/output level check should be performed.
(Refer to maintenance manual Part 2.)

1. Turn off the power.
2. Remove the CP-218 board,
   (Refer to section 6-3-9.)
3. Remove 20 screws.

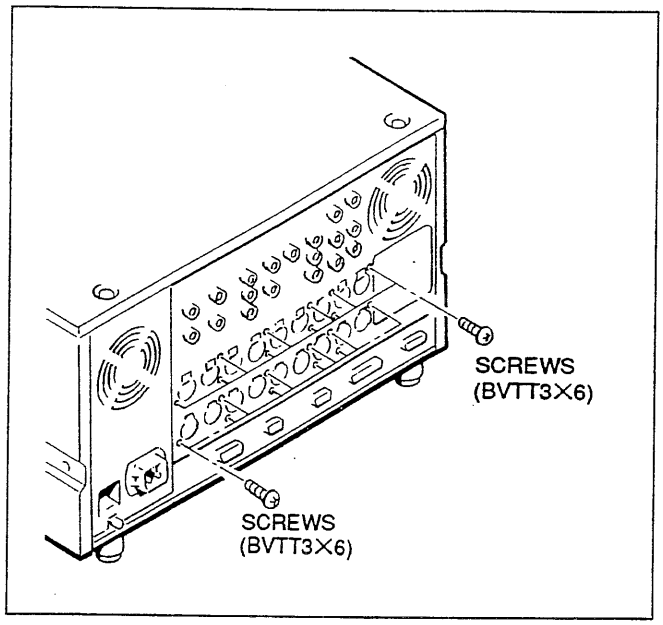

4. Remove a screw, and remove the CP-220 board.

   Note
   At this time, five ornamental plates are come off. Do not lose them.

5. Disconnect five connectors (CN400, CN401, CN402, CN403 and CN404).

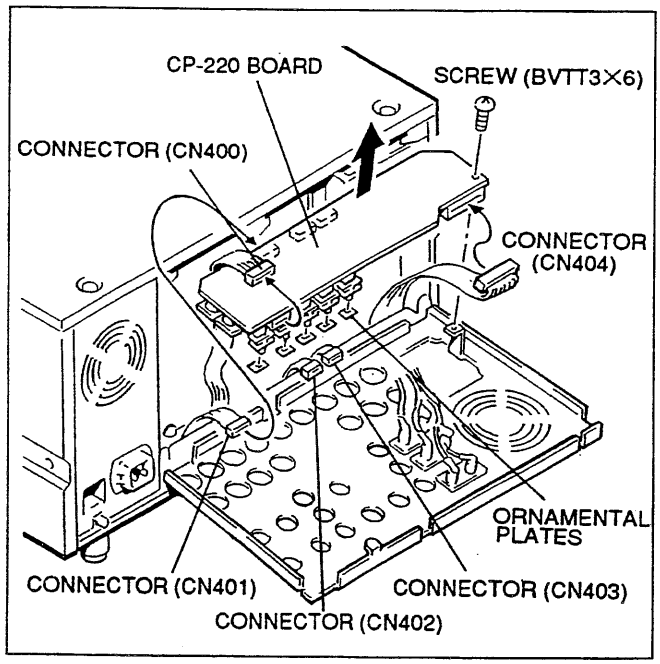

6. Install the CP-220 board in the reverse order of steps 1 through 5.

6-3-11.DR-307/200 Board

After replacing this board, servo/DT adjustment should be performed.
(Refer to maintenance manual Part 2.)

1. Turn off the power.
2. Remove the bottom plate.
   (Refer to section 1-2-1.)
3. Remove three screws, and remove the BT plate.

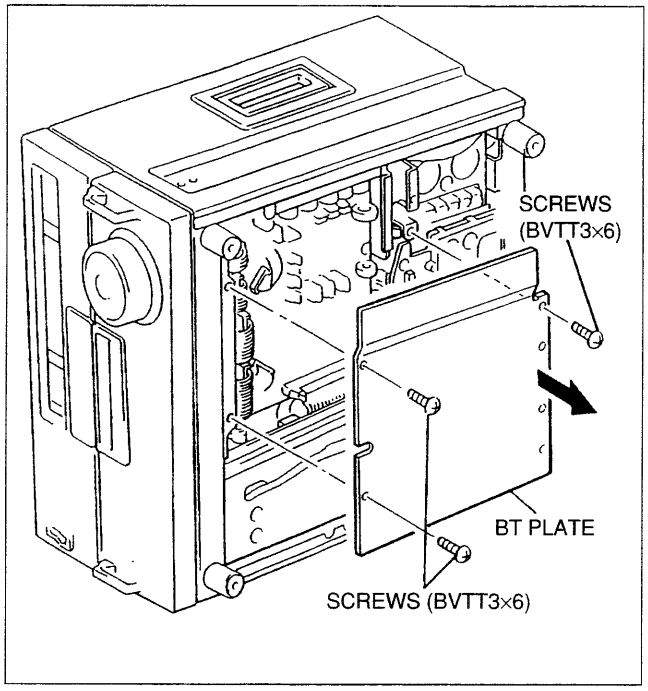

4. Disconnect seven connectors (CN302, CN303, CN304, CN305, CN306, CN321 and CN322).
   (Refer to section 6-1-3.)

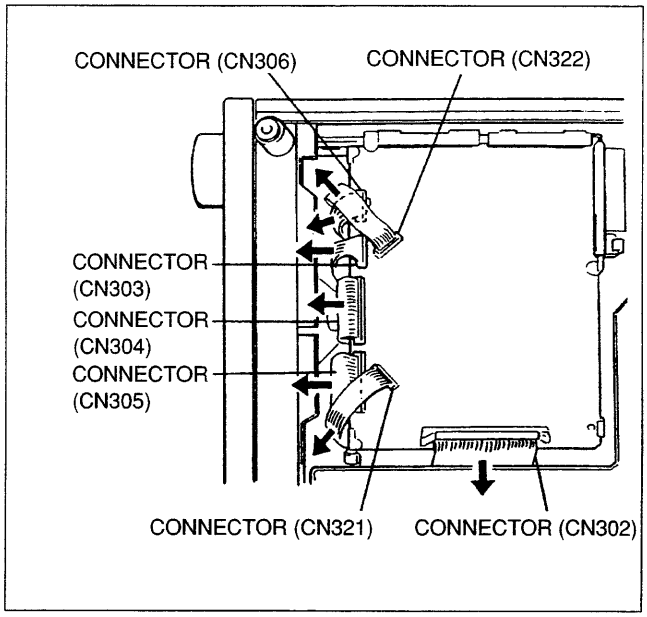

5. Undo the PCB holder, and open the DR-307/200 board.

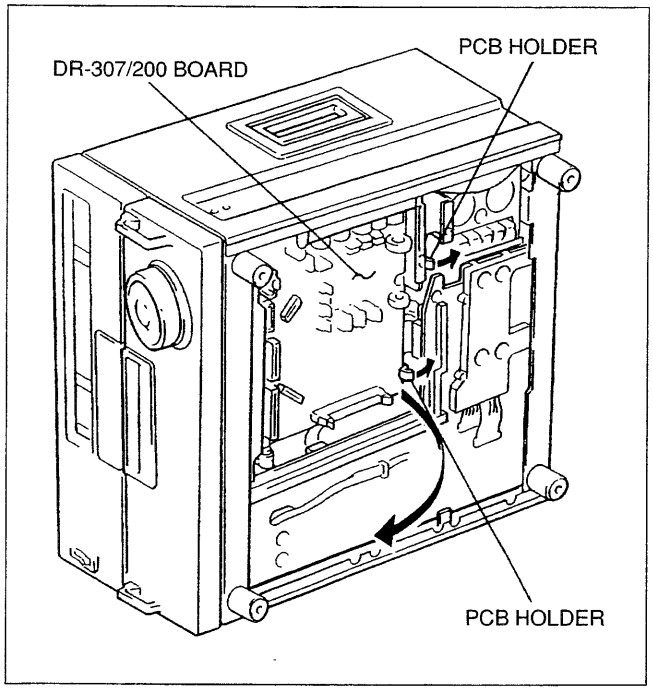

6. Remove the DR-307/200 board from the rod holder.

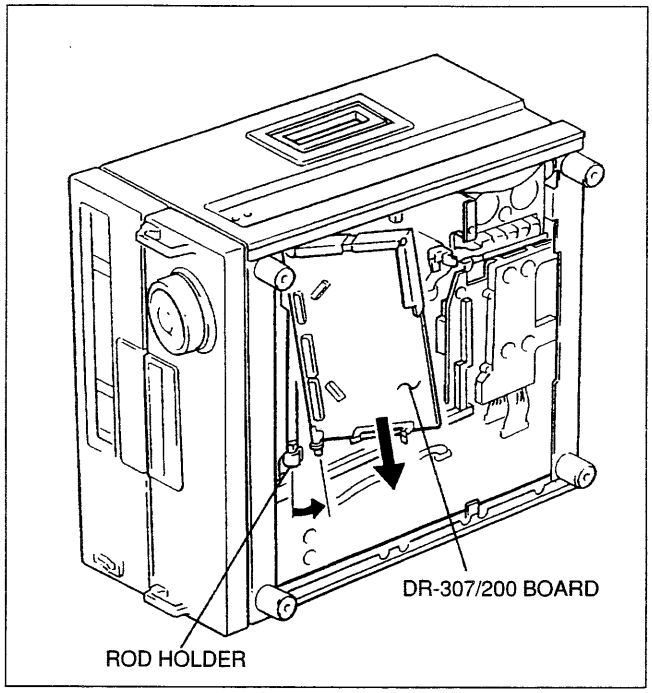

7. Install the DR-307/200 board in the reverse order of steps 1 through 6.

Note

When closing the DR-307/200 board, harness of the CN302 should be put in.

6-3-12. DT-34 Board

After replacing this board, DT adjustment should be performed.
(Refer to maintenance manual Part 2.)

1. Turn off the power.
2. Remove the DR-307/200 board.
   (Refer to section 6-3-11.)
3. Disconnect two connectors (CN390 and CN391).
4. Remove two screws, and remove the DT-34 board.

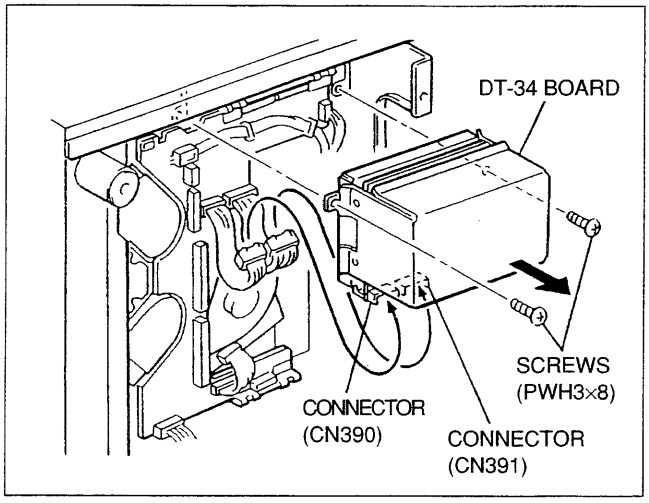

5. Install the DT-34 board in the reverse order of steps 1 through 4.

6-3-13.HN-181 Board

1. Turn off the power.
2. Remove the upper lid.
   (Refer to section 1-2-1.)
3. Remove the MD plate.
   (Refer to section 1-3.)
4. Remove the bottom plate.
   (Refer to section 1-2-1.)
5. Remove three screws, and remove the BT plate.

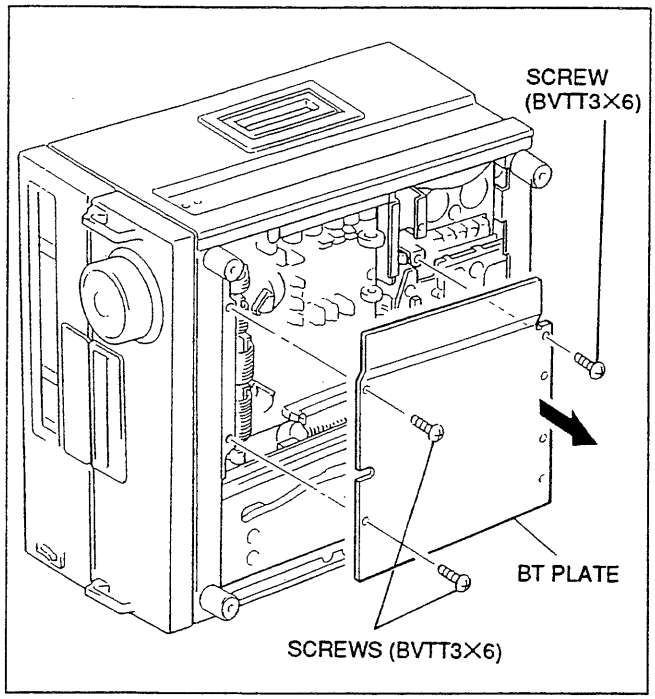

6. Disconnect three connectors (CN302, CN321 and CN322).

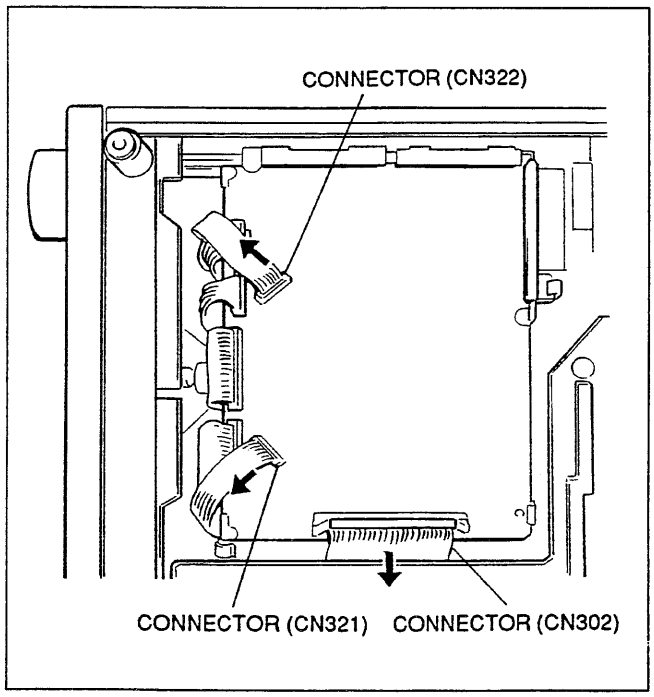

7. Undo the PCB holder, and open the DR-307/200 board.

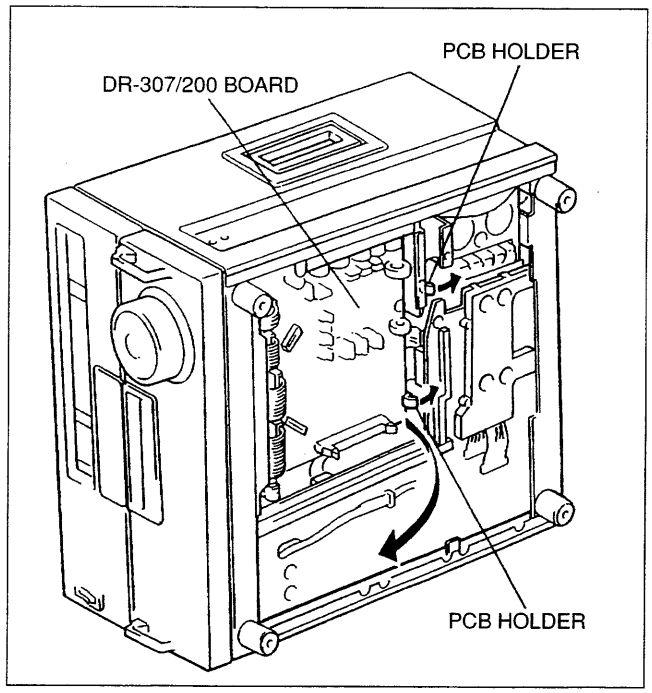

8. Disconnect four connectors (CN212, CN213, CN214 and CN215) on the HN-181 board.

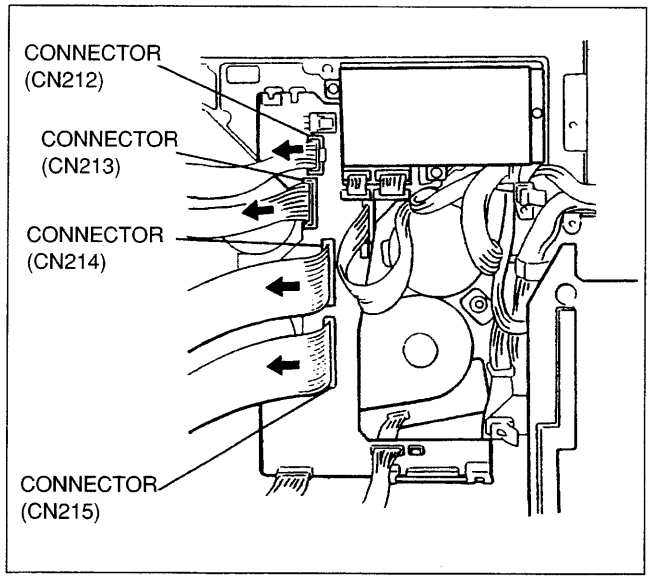

9. Remove three screws, then remove the DR bracket B and DR-307/200 board.

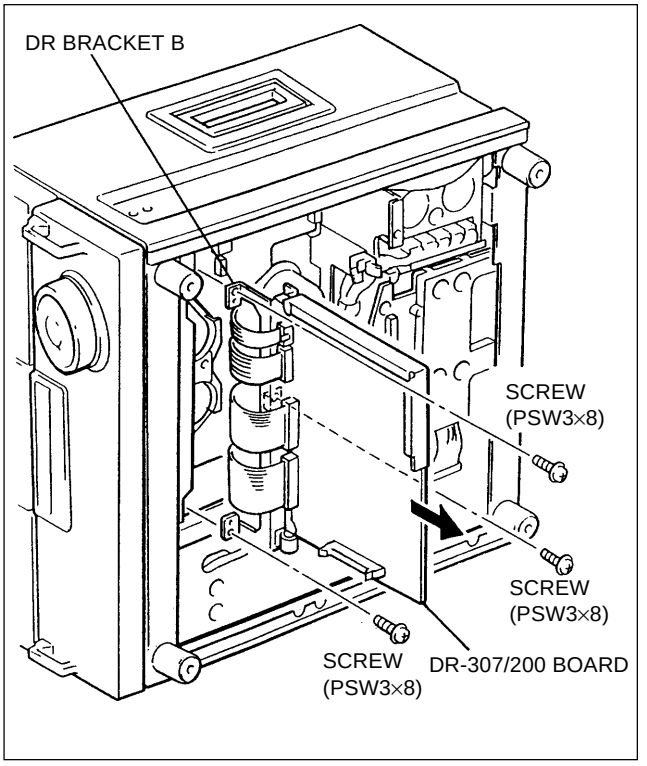

10. Remove the harness cover.

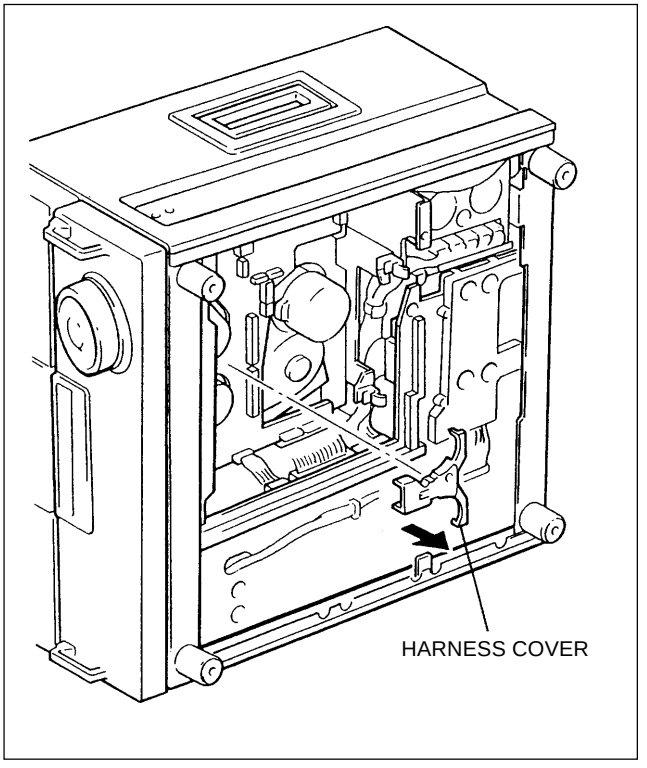

11. Remove two screws, and remove the DT-34 board, then disconnect two connectors (CN208 and CN209).

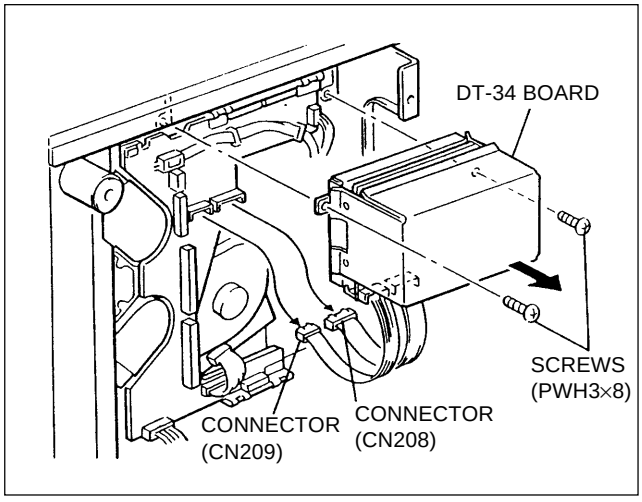

12. Disconnect nine connectors (CN201, CN202, CN204, CN205, CN210, CN211, CN216, CN217 and CN218) on the HN-181 board.

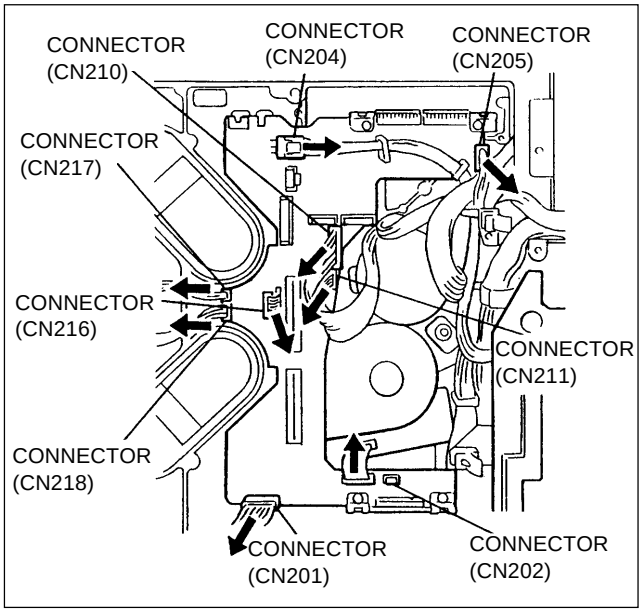

13. Remove two screws which fix HN-184 board and HN-185 board, and remove two HN brackets each.

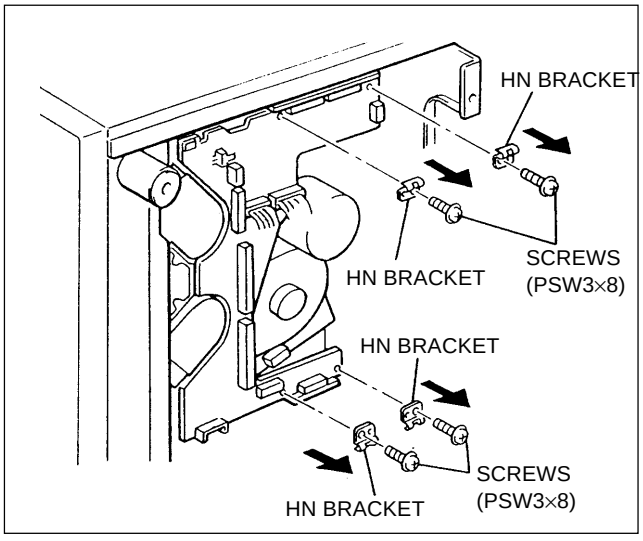

14. Disconnect connector (CN203) with care while holding A portion.

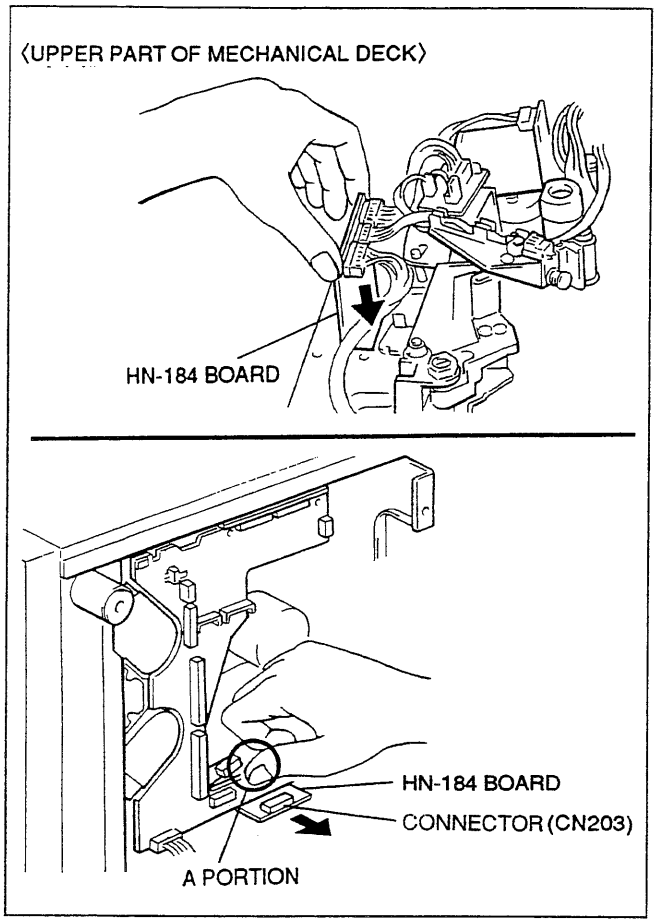

15. Disconnect connector (CN241) on the HN-185 board (to protect flexible card wire from damage).
16. Disconnect two connectors (CN206 and CN207) with care while holding B portion.

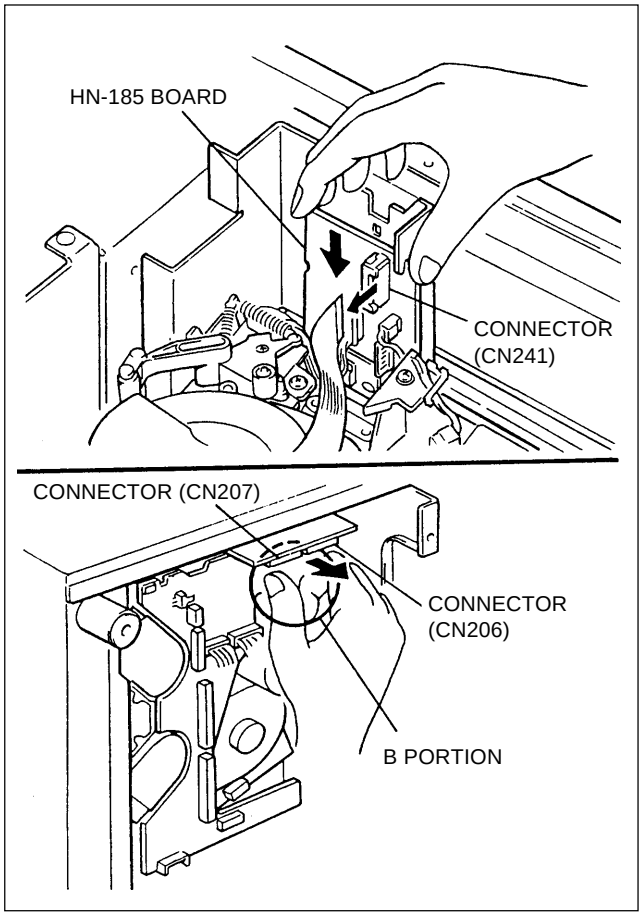

17. Remove four screws, and remove the HN-181 board.

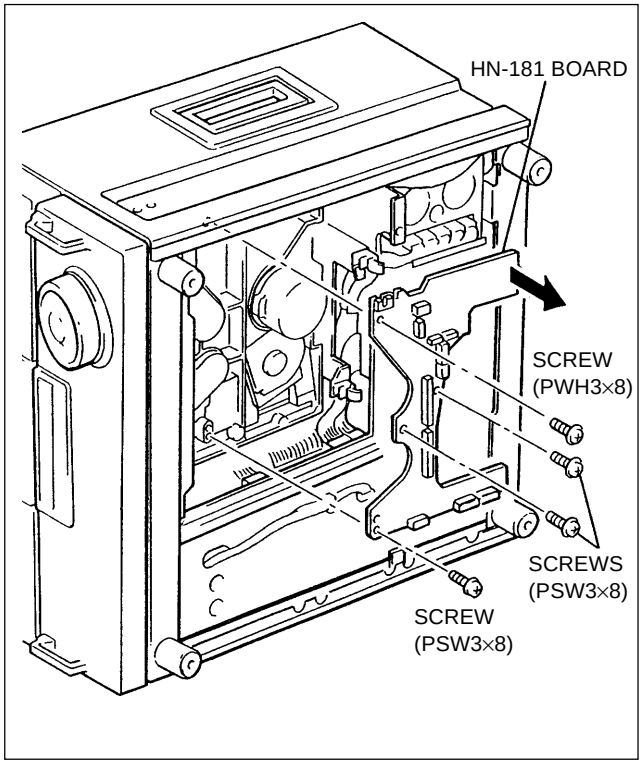

18. Install the HN-181 board in the reverse order of steps 1 through 17.

6-3-14.HN-184 Board

1. Turn off the power.
2. Remove the upper lid.
   (Refer to section 1-2-1.)
3. Remove the MD plate.
   (Refer to section 1-3.)
4. Disconnect five connectors (CN231, CN232, CN233, CN234, CN235).

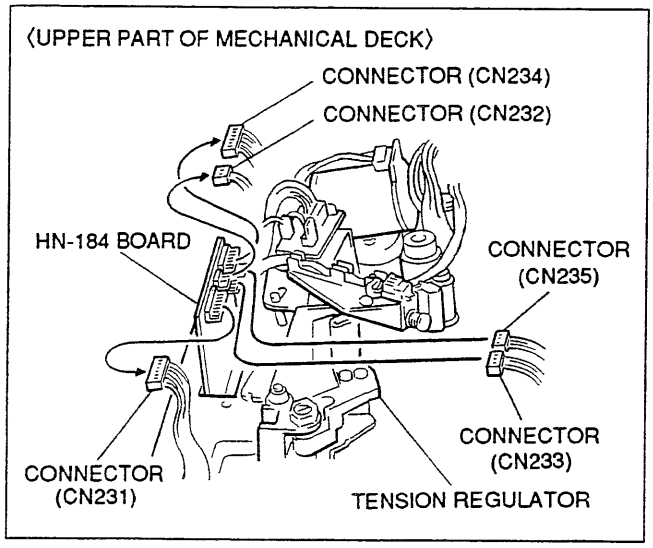

5. Remove the bottom plate.
   (Refer to section 1-2-1.)
6. Remove three screws, and remove the BT plate.

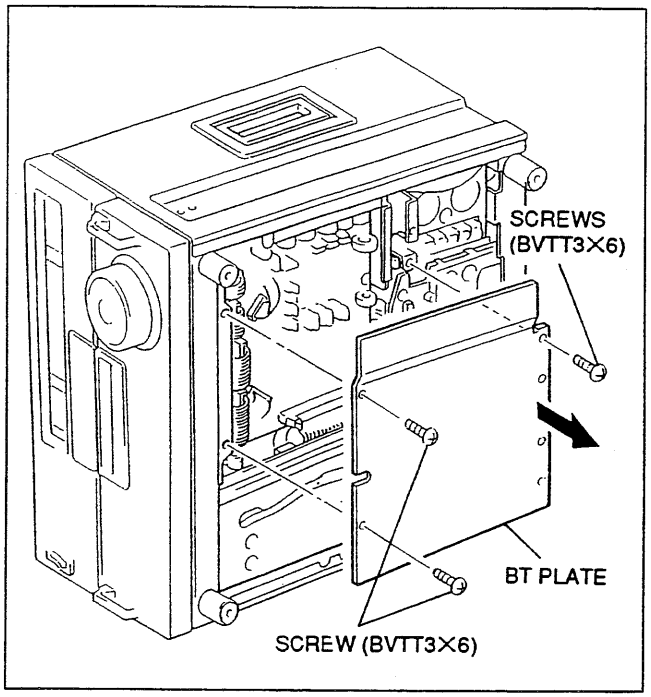

7. Undo the PCB holder, and open the DR-307/200 board.

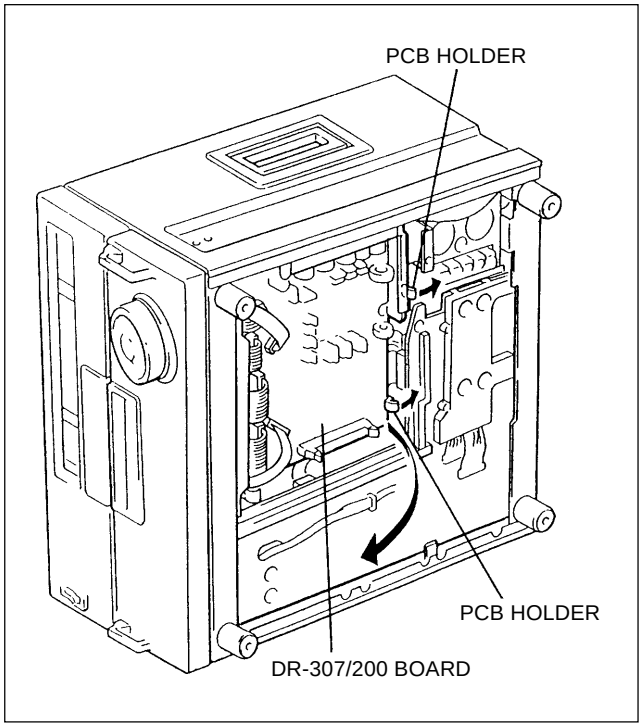

8. Remove two screws, and remove two HN brackets.

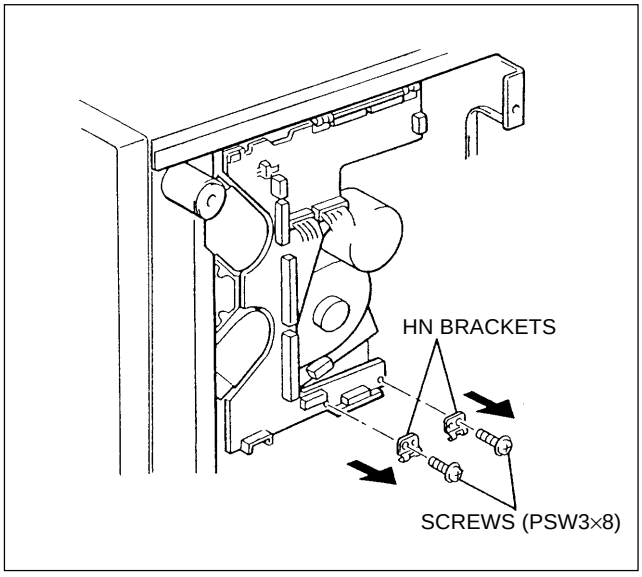

9. Disconnect connector (CN203) with care while holding A portion.

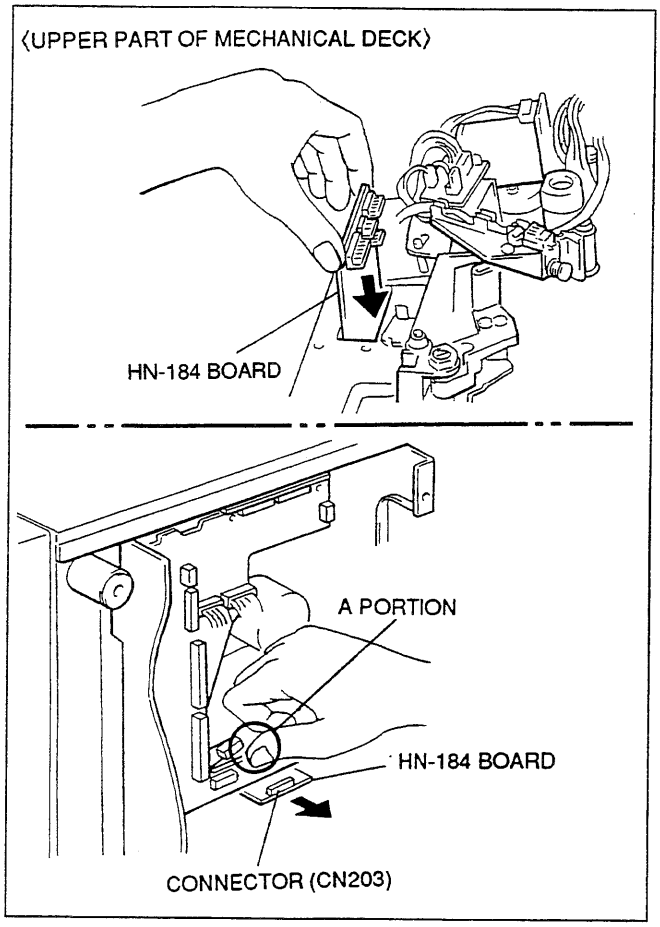

10. Remove the HN-184 board.

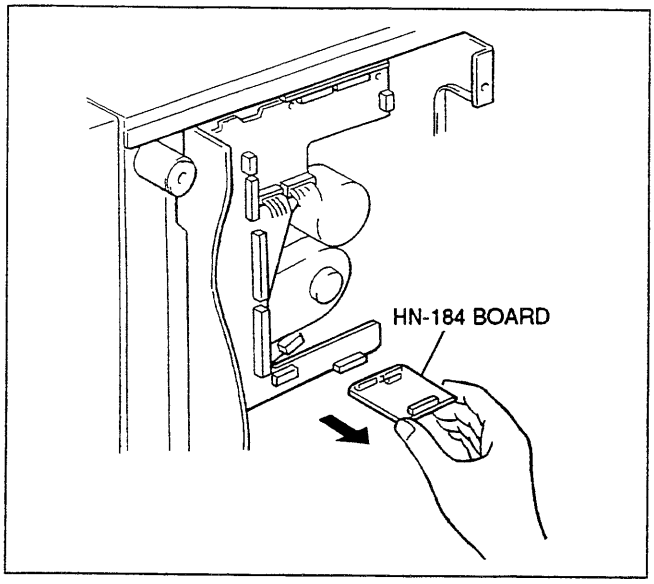

11. Install the HN-184 board in the reverse order of steps 1 through 10.

6-3-15.HN-185 Board

1. Turn off the power.
2. Remove the upper lid.
   (Refer to section 1-2-1.)
3. Remove the MD plate.
   (Refer to section 1-3.)
4. Disconnect four connectors (CN241, CN242, CN243 and CN244).

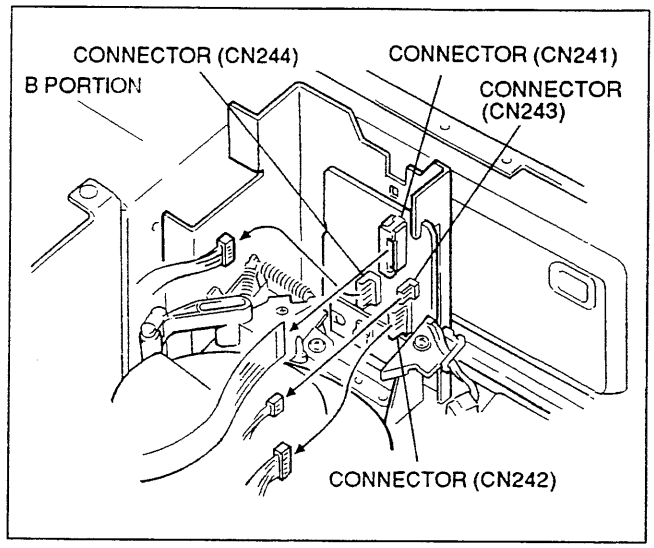

5. Remove a screw, and remove the shield plate.

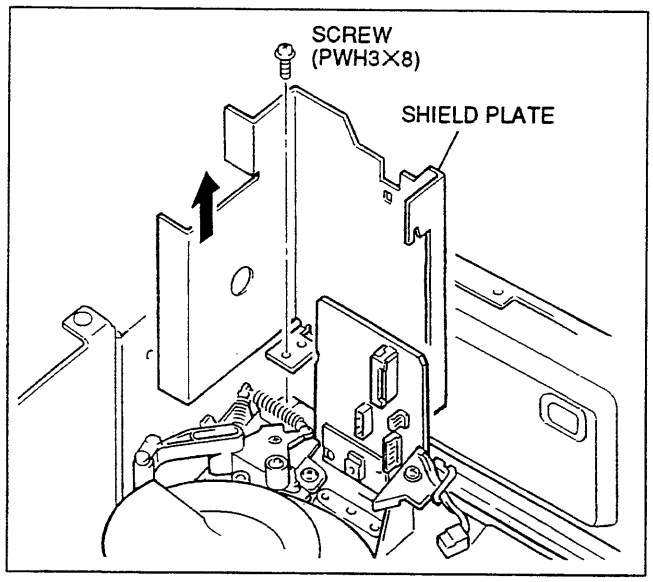

6. Remove the bottom plate.
   (Refer to section 1-2-1.)

7. Remove three screws, and remove the BT plate.

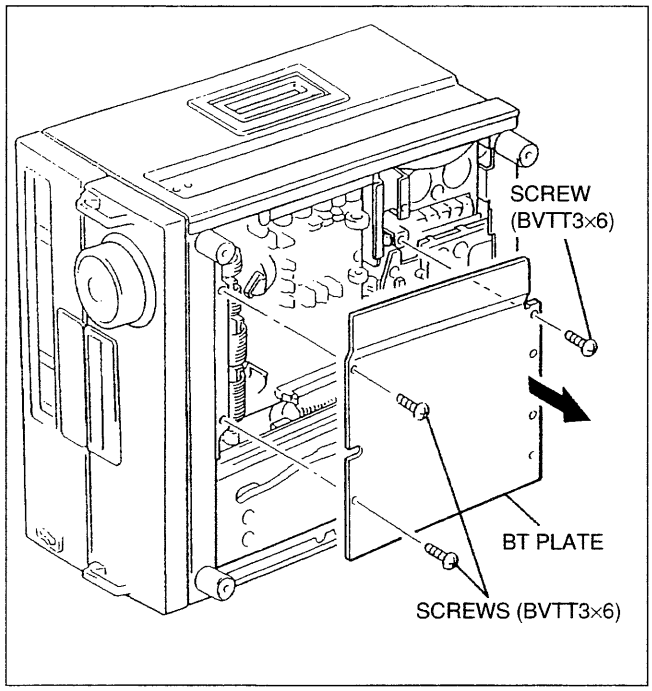

8. Undo the PCB holder, and open the DR-307/200 board.

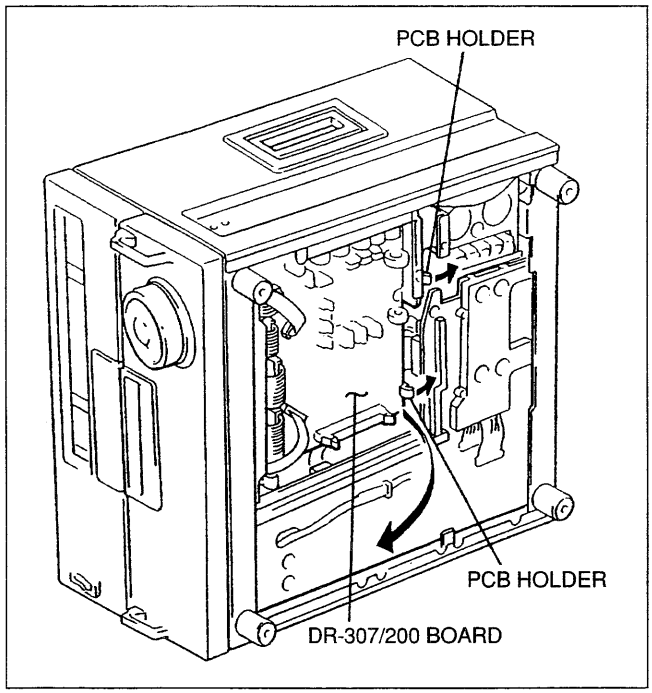

9. Remove two screws, and remove the DT-34 board, then disconnect two connectors (CN208 and CN209).

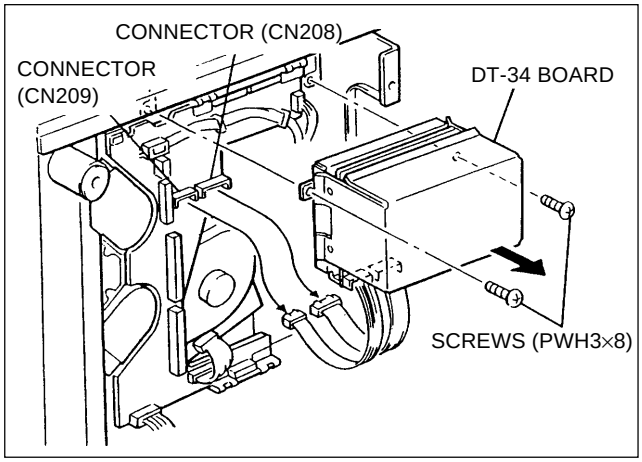

10. Remove two screws and two HN brackets.

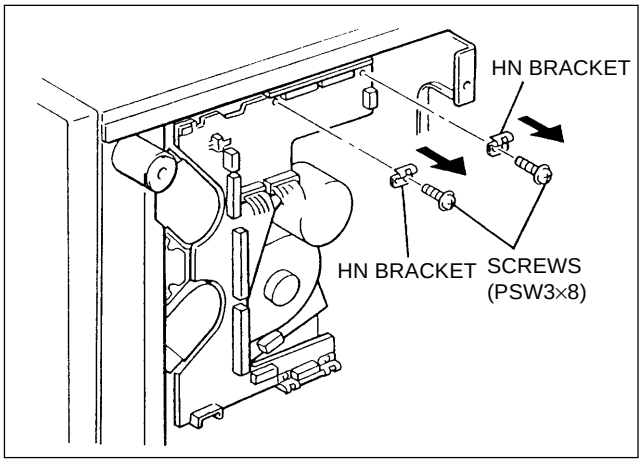

11. Disconnect two connectors (CN206 and CN207) with care while holding B portion.

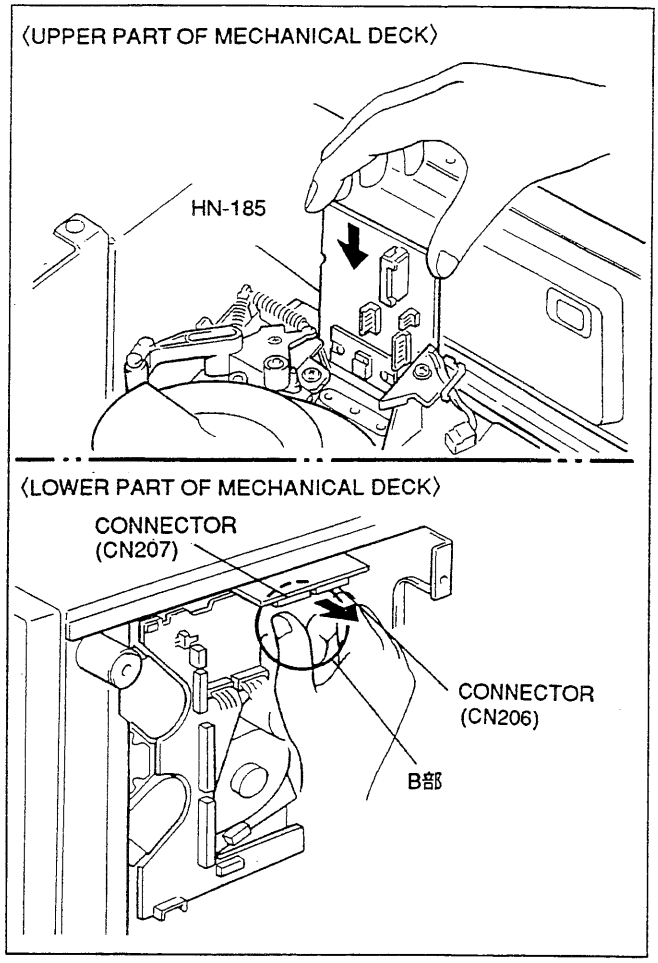

12. Remove the HN-185 board.

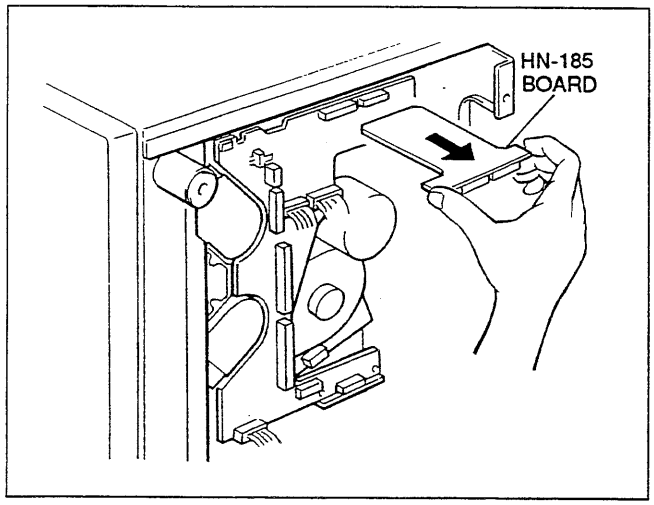

13. Install the HN-185 board in the reverse order of steps 1 through 12.

6-4. ADJUSTMENT AND CHECK AFTER DIGITAL BOARD REPLACEMENT

After each digital board is replaced, perform adjustment and check which are described in following sections.
6-4-1. VPR-1 Board
6-4-2. APR-1 Board
As for DIF-16 and DPR-36 boards, no adjustment is needed after replacing the board. Perform operation check only.

6-4-1. VPR-1 Board

[Item List]

No.	ITEMS	BOARDS	ADJUSTMENTS	NOTES
1	COMPOSITE OUT LEVEL 1/2	VPR-1	A20: VIDEO 1/2	COMPOSITE 1
		VPR-1	CHECK	COMPOSITE 2
	3	VPR-1	A20: VIDEO 3	COMPOSITE 3
	DATA SAVE		A2F: NV-RAM CONTROL	
2	COMPONENT OUT LEVEL Y	VPR-1	A20: Y OUTPUT	COMPONENT Y
	R-Y	VPR-1	A20: R-Y OUTPUT	COMPONENT R-Y
	B-Y	VPR-1	A20: B-Y OUTPUT	COMPONENT B-Y
	DATA SAVE		A2F: NV-RAM CONTROL	
3	COMPONENT OUT PHASE	VPR-1	CHECK	COMPONENT
4	COMPONENT IN LEVEL Y	VPR-1	A22: Y INPUT (LOOP)	COMPONENT Y
	R-Y	VPR-1	A22: R-Y INPUT (LOOP)	COMPONENT R-Y
	B-Y	VPR-1	A22: B-Y INPUT (LOOP)	COMPONENT B-Y
	DATA SAVE		A2F: NV-RAM CONTROL	
5	COMPONENT IN PHASE Y	VPR-1	A22:Y INPUT PHASE	COMPONENT Y
	R-Y	VPR-1	A22: R-Y INPUT DELAY	COMPONENT R-Y
	B-Y	VPR-1	A22: B-Y INPUT DELAY	COMPONENT B-Y
	DATA SAVE		A2F: NV-RAM CONTROL	
6	REF CF PULSE	VPR-1	CHECK	TP1001
7	REF SCH DET	VPR-1	CHECK	TP1002
8	INT 4FSC FREQ	VPR-1	A20: INT 4FSC FREQ	TP1003
9	PB CLOCK PHASE	VPR-1	A20: PB CK27 DL	DATA "F0"

[Equipment]

- Oscilloscope (TEKTRONIX 2465B or equivalent)
- Analog composite signal generator (TEKTRONIX 1411 or equivalent)
  (TEKTRONIX TSG-271 or equivalent)
- Frequency Counter
- PAL Waveform/Vector Monitor (TEKTRONIX 1751 or equivalent)
- Component Waveform Monitor (TEKTRONIX WFM300A or equivalent)

[Connection]

Connection 1

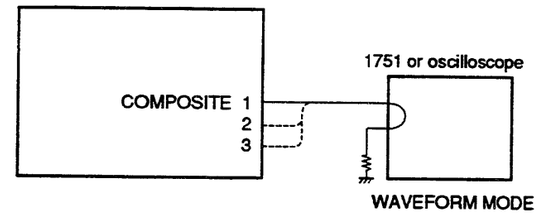

Connection 2

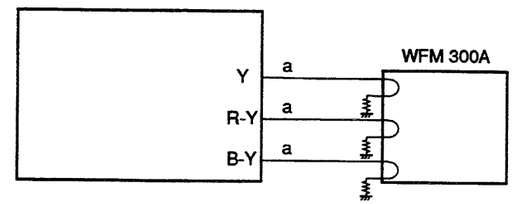

a, b, c: Same length cables.

Connection 3

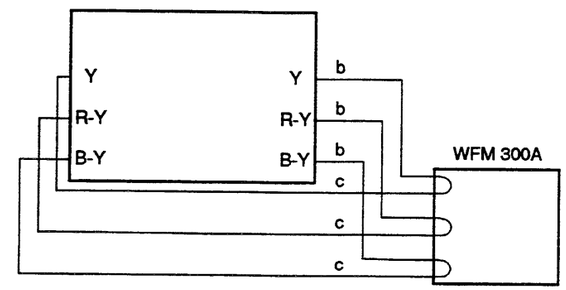

Connection 4

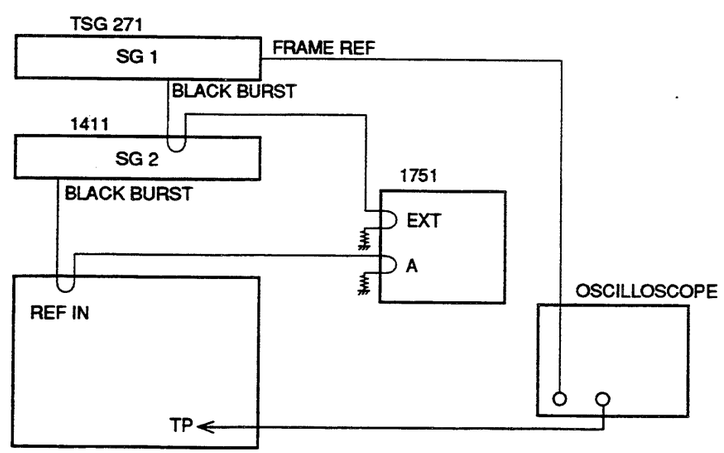

How to operate the maintenance mode

Push ⑧ S300(DIAG/ADJUST 1) (M-1) on the SS-52 board to enter the maintenance mode.

How to enter the next menu:

Press the ⑥ JOG button once. (Enters JOG mode.)
Turn the ⑦ search dial to move the ∗ mark to a desired item.
Press the ③ SET button.

How to exit the current menu or the maintenance mode:

Press the ② MENU button.

How to operate a tape (e.g. PLAY) in the manual adjustment or other items:

Press the ③ SET button to exit the maintenance mode temporarily. (A tape can be operated in this condition.)
Press the ② MENU button to return to the maintenance mode.

How to change the data (adjust the level) manually:

Turn the ⑦ search dial to move the ∗ mark to the item wishing to be adjusted.
Turn the ⑦ search dial while pressing the ⑥ JOG button.

How to save the data:

Turn the ⑦ search dial to move the ∗ mark to "A?F: NV-RAM CONTROL".
Press the ③ SET button.
Turn the ⑦ search dial to move the ∗ mark to "SAVE ALL ADJUST DATA".
Press the ③ SET button.

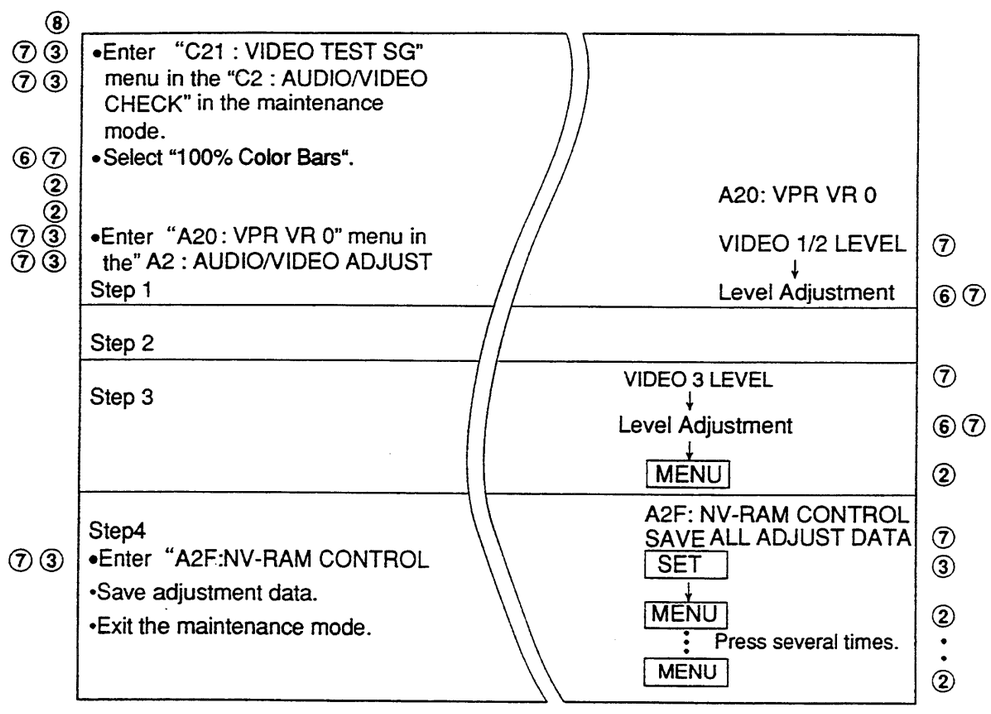

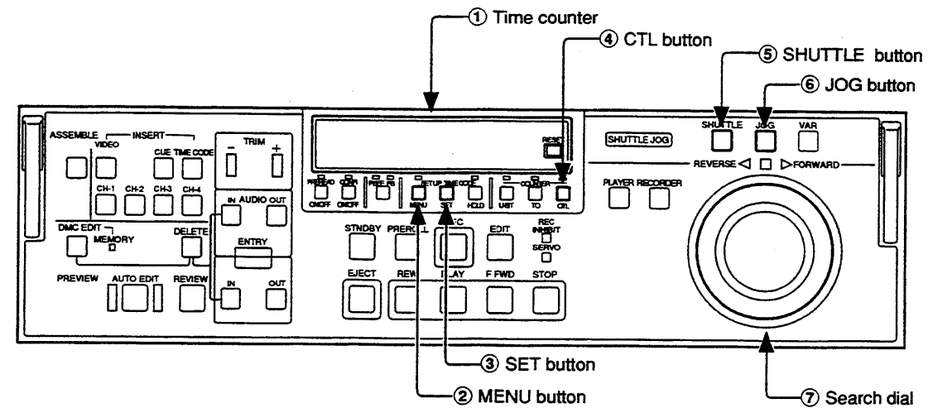

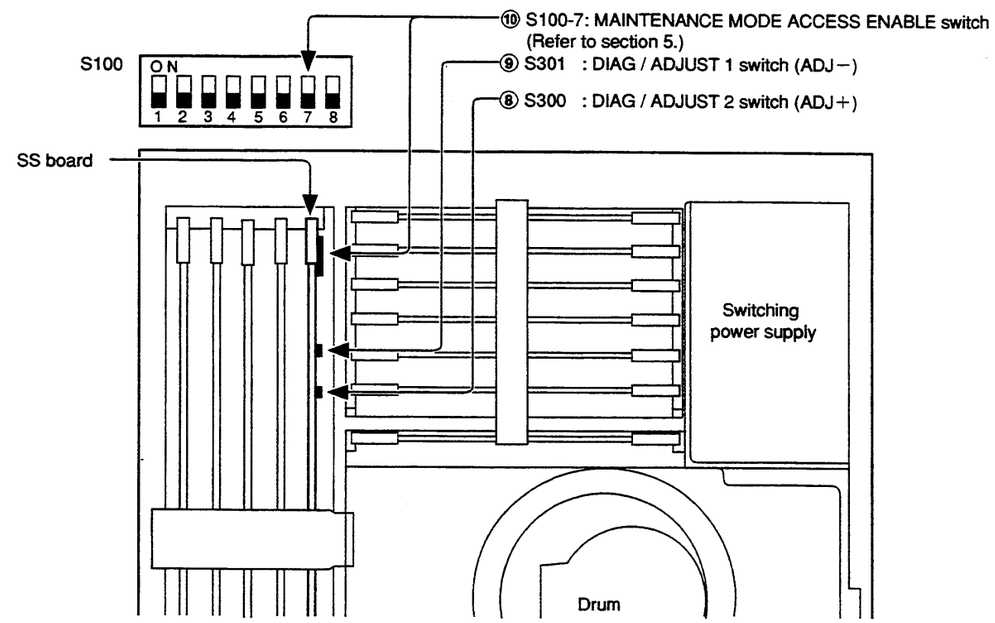

1. Composite Video Output Level Adjustment

Preparations for adjustment	Specifications	Adjustments
• Enter "C21: VIDEO TEST SG" menu in the "C2: AUDIO/VIDEO CHECK" in the maintenance mode. • Select "100% Color Bars". • Enter "A20: VPR VR 0" menu in the "A2: AUDIO/VIDEO ADJUST" **Step 1** • Connect the waveform monitor to COMPOSITE 1 OUT connector. (Refer to Connection 1.)	COMPOSITE 1/2 OUT 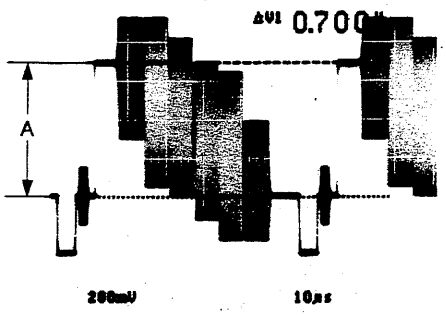 A = 700 ±7 mV p-p	A20: VPR VR 0 VIDEO 1/2 LEVEL ↓ Level Adjustment
Step 2 • Connect the waveform monitor to COMPOSITE 2 OUT connector.		Level Check
Step 3 • Connect the waveform monitor to COMPOSITE 3 OUT connector.	COMPOSITE 3 OUT 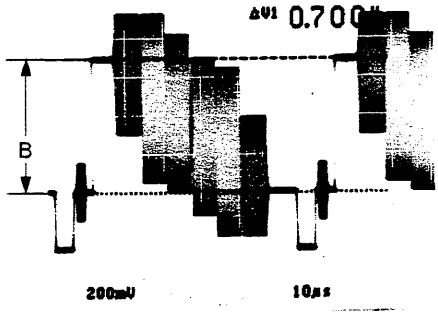 B = 700 ±7 mV p-p	VIDEO 3 LEVEL ↓ Level Adjustment ↓ MENU
Step 4 • Enter "A2F:NV-RAM CONTROL" menu. • Save adjustment data. • Exit the maintenance mode.		A2F:NV-RAM CONTROL SAVE ALL ADJUST DATA SET ↓ MENU ⋮ Press several times. MENU

2. Component Video Output Level Adjustment

Preparations for adjustment	Specifications	Adjustments
Connection 2 • Enter "C21: VIDEO TEST SG" menu in the "C2: AUDIO/VIDEO CHECK" in the maintenance mode. • Select "100% Color Bars". • Enter "A20:VPR VR 0" menu in the "A2:AUDIO/VIDEO ADJUST" **Step 1** • Connect the waveform monitor as Connection 2. • Adjust so that levels of Y, R-Y and B-Y meet the specifications.	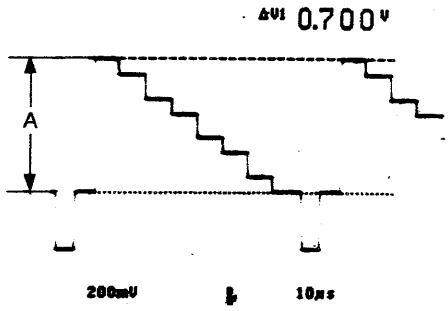 A = 700 ±7 mV p-p 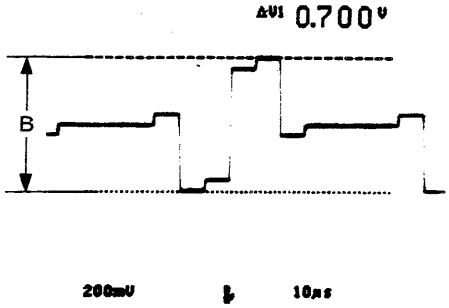 B = 700 ±7 mV p-p 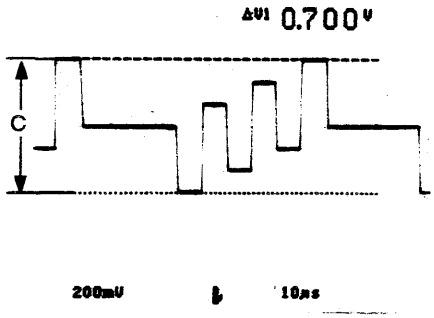 C = 700 ±7 mV p-p	A20: VPR VR 0 Y OUTPUT LEVEL ↓ Level Adjustment ↓ R-Y OUTPUT LEVEL ↓ Level Adjustment ↓ B-Y OUTPUT LEVEL ↓ Level Adjustment ↓ [MENU]
Step 2 • Enter "A2F:NV-RAM CONTROL" menu. • Save adjustment data. • Exit the maintenance mode.		A2F:NV-RAM CONTROL SAVE ALL ADJUST DATA [SET] ↓ [MENU] ⋮ Press several times. [MENU]

3. Component Video Output Phase Check

Preparations for adjustment	Specifications	Adjustments
Connection 2 • Enter "C21: VIDEO TEST SG" menu in the "C2: AUDIO/VIDEO CHECK" in the maintemance mode. • Select the "BOWTIE".	waveform monitor 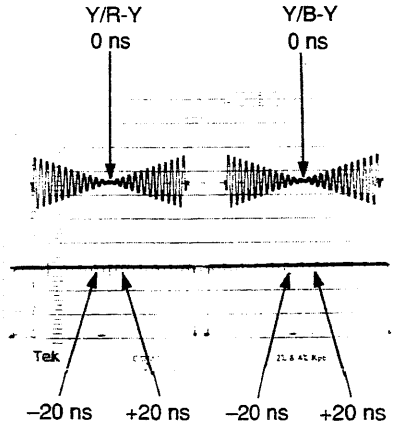 Set the BOWTIE DIP point (cross points of the Y/R-Y and Y/ B-Y) on the center marker. 0 ±10 ns	Check

4. Component Video Input Level Adjustment

Preparations for adjustment	Specifications	Adjustments
Connection 3 • Enter "A22: VPR VR 1 (Loop)" menu in the "A2: AUDIO/VIDEO ADJUST" in the maintenance mode. **Step 1** • Adjust so that levels of Y, R-Y and B-Y meet the specifications.	ANALOG COMPONENT OUT Y 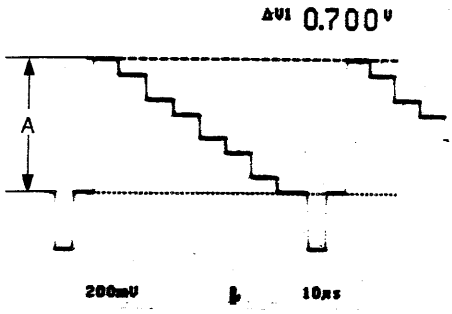 A = 700 ±7 mV p-p R-Y 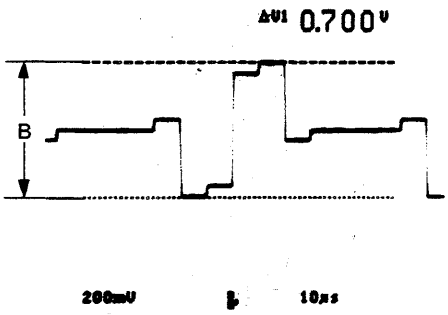 B = 700 ±7 mV p-p B-Y 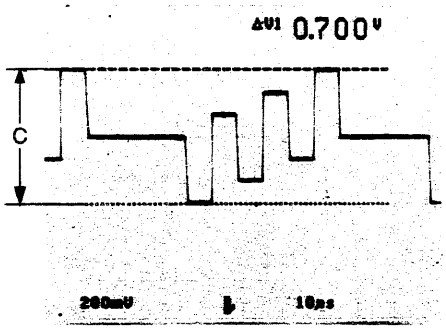 C = 700 ±7 mV p-p	A22: VPR VR 1 (Loop) Y INPUT LEVEL ↓ Level Adjustment ↓ R-Y INPUT LEVEL ↓ Level Adjustment ↓ B-Y INPUT LEVEL ↓ Level Adjustment ↓ [MENU]
Step 2 • Enter "A2F:NV-RAM CONTROL" menu. • Save adjustment data. • Exit the maintenance mode.		A2F:NV-RAM CONTROL SAVE ALL ADJUST DATA [SET] ↓ [MENU] ⋮ Press several times. [MENU]

5. Component Video Input Phase Adjustment

Preparations for adjustment	Specifications	Adjustments
Connection 3 **Step 1** • Enter "A22:VPR VR 1 (Loop)" menu in the "A2:AUDIO/VIDEO ADJUST" in the maintenance mode.	ANALOG COMPONENT Y OUT 2T Pulse Portion Before Adjustment 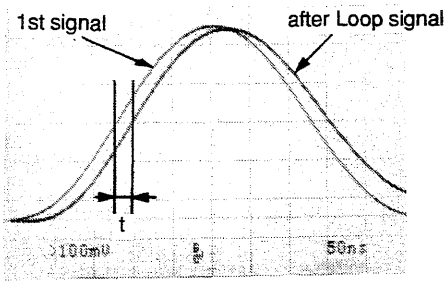 After Adjustment 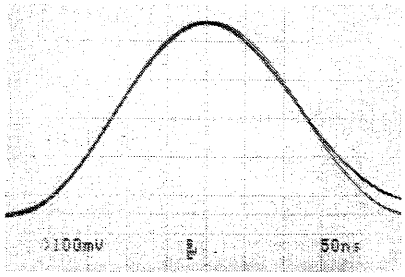 t ≦ 20 ns	A22:VPR VR 1 (Loop) Y INPUT PHASE ↓ Phase Adjustment
Step 2 • Select "A22:VPR VR 1 (Loop)" in the "A2:AUDIO/VIDEO ADJUST" in the maintenance mode.	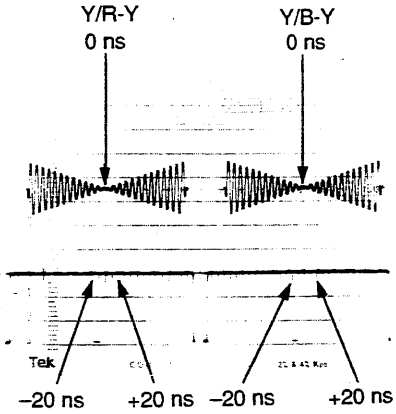 Set the BOWTIE DIP point (cross points of the Y/R-Y and Y/B-Y) on the center marker. 0 ±10 ns	Y/R-Y INPUT DELAY ↓ Phase Adjustment ↓ Y/B-Y INPUT DELAY ↓ Phase Adjustment ↓ MENU
Step 3 • Enter "A2F:NV-RAM CONTROL" menu. • Save adjustment data. • Exit the maintenance mode.		A2F:NV-RAM CONTROL SAVE ALL ADJUST DATA SET ↓ MENU ⋮ Press several times. MENU

6. REF CF Pulse Check

Preparations for adjustment	Specifications	Adjustments
Connection 4 **Step 1** • Measure the output of the SG 2 (1411) with the SCH meter (1751).	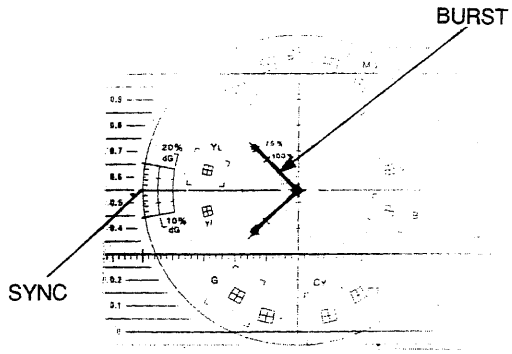 SCH = 0°	1411 SC PHASE VR
Step 2 • Observe FRAME REF of the TSG271A and TP1001 on the VPR-1 board with the oscilloscope. • Turn the SC PHASE VR of the 1411 clockwise slowly from the standard point. When the waveform of the oscilloscope changes A to B, the phase of the burst is referred to as Asc. • Turn the SC PHASE VR of the 1411 counterclockwise slowly from the standard point. When the waveform of the oscilloscope changes A to B, the phase of the burst is referred to as Bsc. 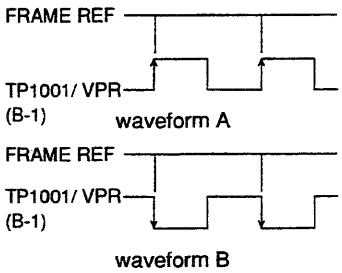	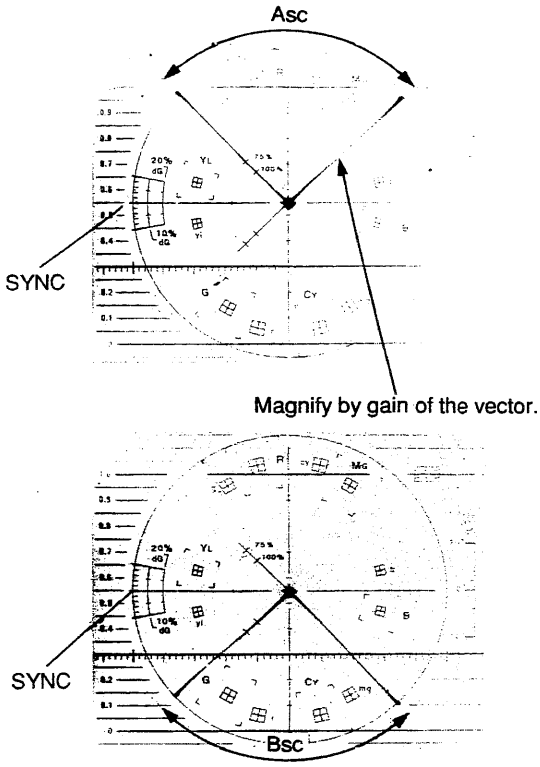 | Asc - Bsc | ≦ 10°	Check
Step 3 When the specification is not met: • Enter "A20:VPR VR 0" menu in the "A2:AUDIO VIDEO ADJUST" in the maintenance mode.		A20:VPR VR 0 REF 1st FLD DET ↓ Phase Adjsutment ↓ MENU
Step 4 • Enter "A2F:NV-RAM CONTROL" menu. • Save adjustment data. • Exit the maintenance mode.		A2F:NV-RAM CONTROL SAVE ALL ADJUST DATA SET ↓ MENU ⋮ Press several times. MENU

7. REF SCH DET Check

Preparations for adjustment	Specifications	Adjustments
Connection 4 **Step 1** • Measure the output of the SG 2 (1411) with the SCH meter (1751).	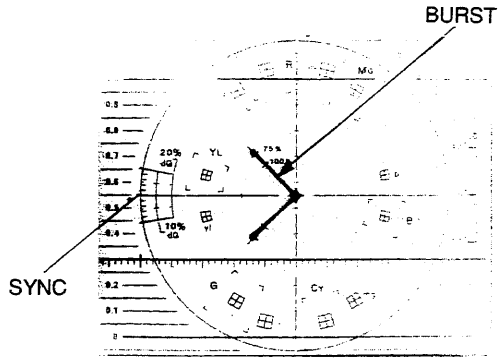 SCH = 0°	1411 SC PHASE VR
Step 2 • Observe TP1002 on the VPR-1 board with the oscilloscope. • Turn the SC PHASE VR of the 1411 clockwise slowly from the standard point. When the waveform of the oscilloscope changes A to B, the phase of the burst is referred to as Asc. • Turn the SC PHASE VR of the 1411 counterclockwise slowly from the standard point. When the waveform of the oscilloscope changes A to B, the phase of the burst is referred to as Bsc. TP1002/VPR1 ———— +5V (B, C-2) ———— GND waveform A TP1002/VPR1 ---------- (B, C-2) ———— GND waveform B	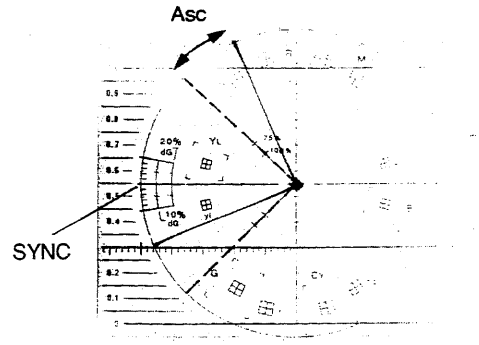 Magnify by gain of the vector. 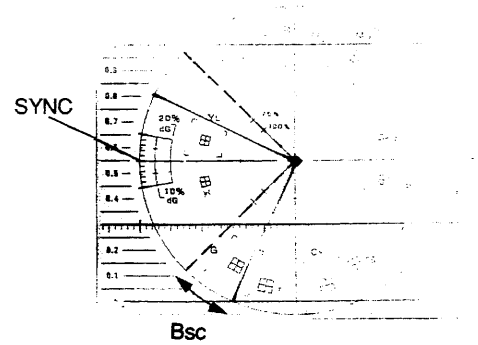 | Asc - Bsc | ≦ 10°	Check
Step 3 When the specification is not met: • Enter "A20:VPR VR 0" menu in the "A2:AUDIO VIDEO ADJUST" in the maintenance mode.		A20:VPR VR 0 REF SCH DET ↓ Phase Adjsutment ↓ MENU
Step 4 • Enter "A2F:NV-RAM CONTROL" menu. • Save adjustment data. • Exit the maintenance mode.		A2F:NV-RAM CONTROL SAVE ALL ADJUST DATA SET ↓ MENU ⋮ Press several times. MENU

8. INT 4Fsc Frequency Adjustment

Preparations for adjustment	Specifications	Adjustments
Step 1 • Disconnect the REF IN of the unit. • Connect the frequency counter to TP1003 on the VPR-1 board. • Enter "A20:VPR VR 0" menu in the "A2:AUDIO/VIDEO ADJUST" in the maintenance mode.	TP1003/VPR-1(B-1) 17,734,476 ± 50 Hz	A20: VPR VR 0 INT 4Fsc FREQ ↓ Frequency Adjustment ↓ [MENU]
Step 2 • Enter "A2F:NV-RAM CONTROL" menu. • Save adjustment data. • Exit the maintenance mode.		A2F:NV-RAM CONTROL SAVE ALL ADJUST DATA [SET] ↓ [MENU] ⋮ Press several times. [MENU]

9. PB Clock Phase Adjustment

Preparations for adjustment	Specifications	Adjustments
Step 1 • Enter "A20:VPR VR 0" menu in the "A2:AUDIO/VIDEO ADJUST" in the maintenance mode.	DATA"F0"	A20: VPR VR 0 PB CK27 DL ↓ Data Setting ↓ [MENU]
Step 2 • Enter "A2F:NV-RAM CONTROL" menu. • Save adjustment data. • Exit the maintenance mode.		A2F:NV-RAM CONTROL SAVE ALL ADJUST DATA [SET] ↓ [MENU] ⋮ Press several times. [MENU]

6-4-2. APR-1 Board

[Equipment]

- Audio Signal Generator (SONY TEKTRONIX SG505-option 02 or equivalent)
- Audio Analyzer (SONY TEKTRONIX AA501A-option 02 or equivalent)
  Note: Audio analyzer should be filtered through 80 kHz L.P.F unless otherwise specified.
- Alignment tape CR8-1A PS (Part No.8-960-098-45)

TIME min.: sec.	AUDIO TRACK
0 : 00	1 kHz, 0 VU
2 : 55	Blank
3 : 00	10 kHz, -10 VU
4 : 55	Blank
5 : 00	1 kHz, -20 VU
5 : 55	Blank
6 : 00	40 Hz, 7,10,15 kHz, -20 VU*2
7 : 55	Blank
8 : 00	1 kHz, 0 VU CTL TRACK 1 kHz,0 vu
10 : 00	

- Alignment tape CR8-1B PS (Part No.8-960-096-86)

TIME min.: sec.	AUDIO TRACK	VIDEO TRACK	CTL TRACK
0 : 00	1 kHz, 0 VU *1	Black Burst	CTL
3 : 00	15 kHz, 0 VU	Black Burst	CTL
5 : 00	1 kHz, -20 VU	Black Burst	CTL
6 : 00	40 Hz, -20 VU*2	Black Burst	CTL
6 : 30	7 kHz, -20 VU*2		
7 : 00	10 kHz, -20 VU*2		
7: 30	15 kHz, -20 VU*2		
8 : 00	1 kHz, 0 VU	——	1 kHz sine wave
10 : 00			

*1. When this tape is reproduced in the audio reference level check or adjustment, the output level (0 dB) should be corrected according to the correction value as follows.
Example: Correction Value = –0.5 dB
Output level = 0 dB – 0.5 dB = –0.5 dB

*2. When this tape is reproduced in the audio frequency response check or adjustment, the output level should be corrected according to the correction value.

• Alignment tape CR5-1B PS (Part No.8-960-096-91)

TIME min.:sec.	VIDEO TRACK	AFM	CTL
0 : 00	RF Sweep	No Signal	CTL
2 : 00	60% H Sweep (CTDM)		
5 : 00	Pulse & Bar (CTDM)		
8 : 00	60% Multi Burst		
11 : 00	Pulse & Bar		
14 : 00	100% Color Bars	400 Hz SINE WAVE 25 kHz DEVIATION	
16 : 30		75 kHz DEVIATION	
17 : 00	50% Bowtie & 10T	No Signal	
19 : 00	Line 17 Signal		
22 : 00	Quad Phase		
24 : 00	Flat Field		
26 : 00	100% Color Bars with Dropout		
28 : 00	Composite H Sweep with VISC		
30 : 00			

1. A-D/D-A Unity Level Adjustment (for Board Suffix No. -16 and later)

Preparations for adjustment	Specifications	Adjustments
• Supply the 1 kHz, +4.0 dBu (terminated 600 Ω) signal to AUDIO INPUT CH1, CH2, CH3 and CH4 on the connector panel. • EE mode • EMPHASIS/sub control panel: OFF	ANALOG AUDIO OUTPUT CH1, CH2, CH3 and CH4 +4.0 ±0.1 dBu (terminated by 600 Ω)	CH1: ⊘RV101/APR-1(P-1) CH2: ⊘RV201/APR-1(M-1) CH3: ⊘RV301/APR-1(J-1) CH4: ⊘RV401/APR-1(G-1)

2. LAU PB Level Adjustment (For DVW-A500P)

Preparations for adjustment	Specifications	Adjustments
• Play back the 1 kHz, 0 VU signal portion (0:00-2:55) of the alignment tape CR8-1B PS.	ANALOG AUDIO OUTPUT CH1 and CH2 +4.0 ±0.1 dBu (terminated by 600 Ω)	CH1: ⊘RV103/AP-28(A-1) CH2: ⊘RV203/AP-28(A-1)

3. AFM PB Level Adjustment (For DVW-A500P)

Preparations for adjustment	Specifications	Adjustments
• Do not extend the AP-28 board. • Play back the color bars signal portion (14:00-16:00) of the alignment tape CR5-1B PS.	ANALOG AUDIO OUTPUT CH3 and CH4 +4.0 ±0.1 dBu (terminated by 600 Ω)	CH3: ⊘RV502/AP-28(C-1) CH4: ⊘RV602/AP-28(C-1)

Board suffix No. 16 and later

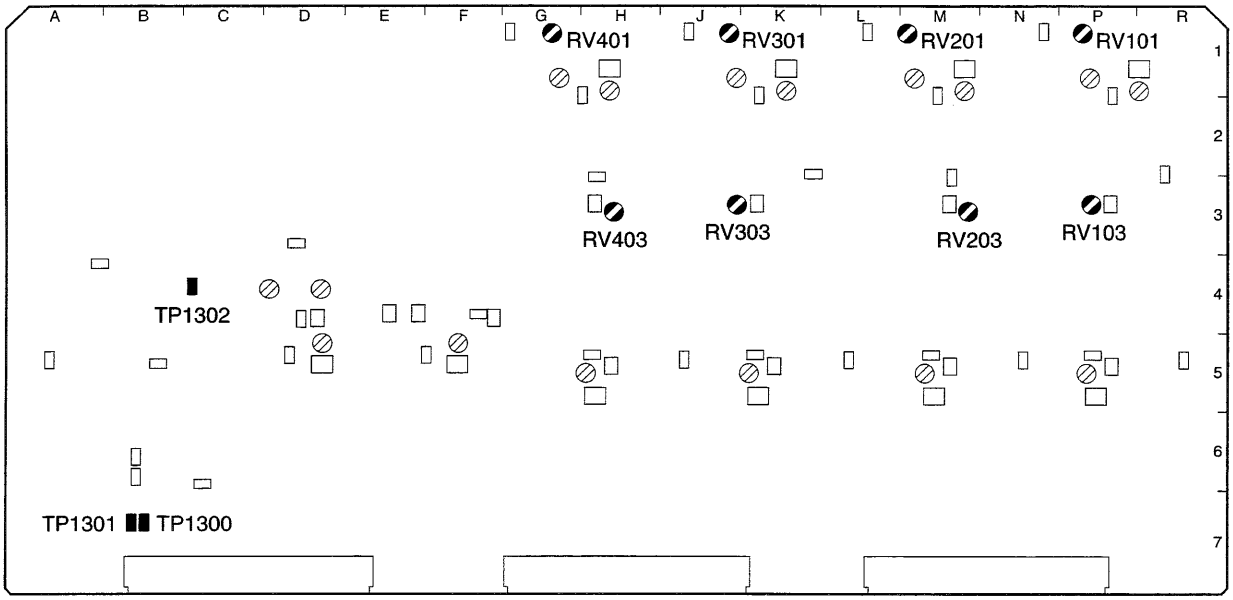

4. Offset Level Check (for Board Suffix No. -16 and later)

* More than 20 minutes should elapse after turning the power on, when this check is performed.

Preparations for adjustment	Specifications	Adjustments
• Supply no signal to the AUDIO INPUT connector. • AUDIO INPUT LEVEL switch (CH1 through CH4)/connector panel: HIGH/600 Ω ON • Connect CH1 and CH2 of the oscilloscope to TP1300(or TP1301) and TP1302 on the APR-1 board. **Step 1** • Check that lower 8 bits situate between Fig.B and Fig.C.	TP1300/ TP1301 FS: TP1302 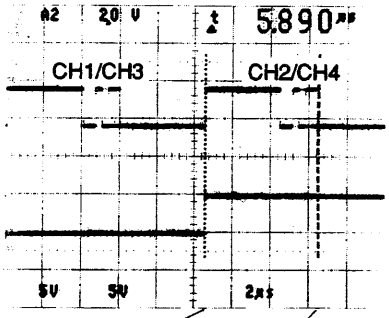 	Check
Step 2 When specification is not met • Adjust so that waveform of Fig.A appears.	MSB LSB Fig. A 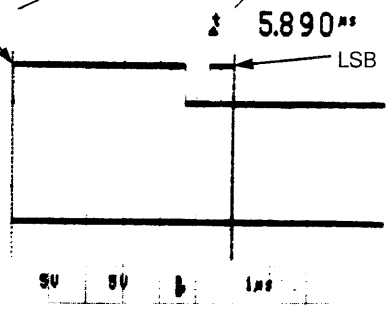 MSB LSB Bit 18 … 8 7 6 5 4 3 2 1 Fig B: H … H H H L H L × × Fig A: H … H H H H L L × × Fig C: H … H H H H H L × × ×:Do not care Fig. B 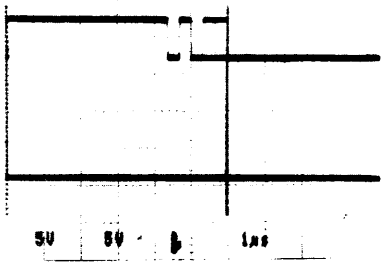 Fig. C 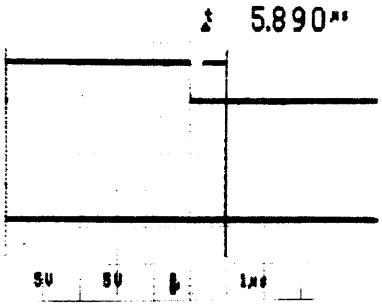 	TP1300 CH1: ⊘RV103/APR-1(P-3) CH2: ⊘RV203/APR-1(M-3) TP1301 CH3: ⊘RV303/APR-1(J-3) CH4: ⊘RV403/APR-1(H-3) TRIG: TP1302/APR-1 (C-4)

1. A-D/D-A Unity Level Adjustment (for Board Suffix No. -11, 12, 13, 14, 21, 22 or 23)

Preparations for adjustment	Specifications	Adjustments
• Supply the 1 kHz, +4.0 dBu (terminated 600 Ω) signal to AUDIO INPUT CH1, CH2, CH3 and CH4 on the connector panel. • EE mode • EMPHASIS/sub control panel: OFF	ANALOG AUDIO OUTPUT CH1, CH2, CH3 and CH4 +4.0 ±0.1 dBu (terminated by 600 Ω)	CH1: ⊘RV101/APR-1(P-1) CH2: ⊘RV201/APR-1(L-1) CH3: ⊘RV301/APR-1(J-1) CH4: ⊘RV401/APR-1(G-1)

2. LAU PB Level Adjustment (For DVW-A500P)

Preparations for adjustment	Specifications	Adjustments
• Play back the 1 kHz, 0 VU signal portion (0:00-2:55) of the alignment tape CR8-1B PS.	ANALOG AUDIO OUTPUT CH1 and CH2 +4.0 ±0.1 dBu (terminated by 600 Ω)	CH1: ⊘RV103/AP-28(A-1) CH2: ⊘RV203/AP-28(A-1)

3. AFM PB Level Adjustment (For DVW-A500P)

Preparations for adjustment	Specifications	Adjustments
• Do not extend the AP-28 board. • Play back the color bars signal portion (14:00-16:00) of the alignment tape CR5-1B PS.	ANALOG AUDIO OUTPUT CH3 and CH4 +4.0 ±0.1 dBu (terminated by 600 Ω)	CH3: ⊘RV502/AP-28(C-1) CH4: ⊘RV602/AP-28(C-1)

Board suffix No. 11, 12, 13, 14, 21, 22 or 23

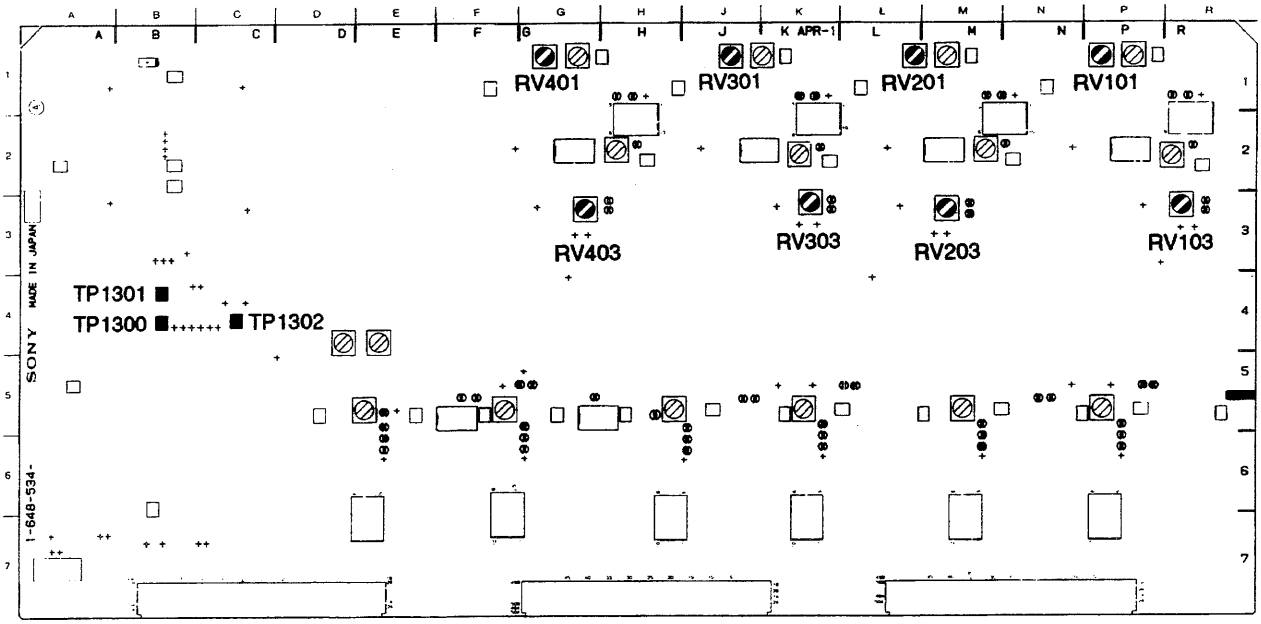

4. Offset Level Check (for Board Suffix No. -11, 12, or 21)

* More than 20 minutes should elapse after turning the power on, when this check is performed.

Preparations for adjustment	Specifications	Adjustments
• Supply no signal to the AUDIO INPUT connector. • AUDIO INPUT LEVEL switch (CH1 through CH4)/connector panel: HIGH/600 Ω ON • Connect CH1 and CH2 of the oscilloscope to TP1300(or TP1301) and TP1302 on the APR-1 board. **Step 1** • Check that lower 8 bits situate between Fig.B and Fig.C.	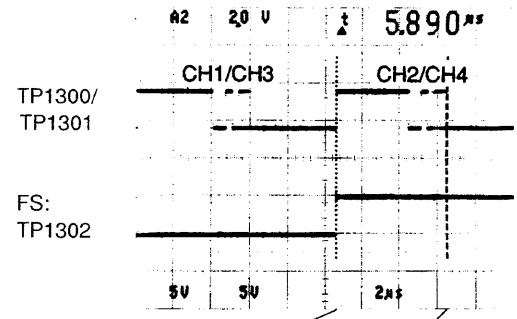	Check
Step 2 When specification is not met • Adjust so that waveform of Fig.A appears.	MSB 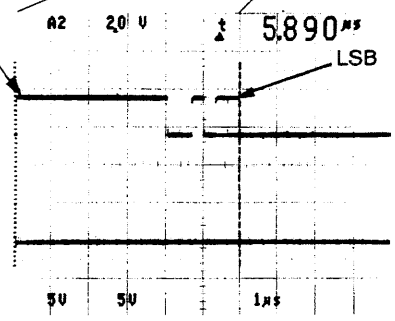 Fig. A MSB LSB Bit 18 … 8 7 6 5 4 3 2 1 Fig B: H … H L H H × × × × Fig A: H … H H L L × × × × Fig C: H … H H H H H × × × ×:Do not care 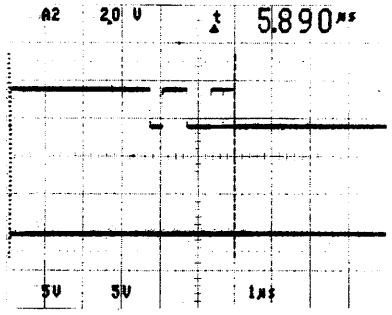 Fig. B 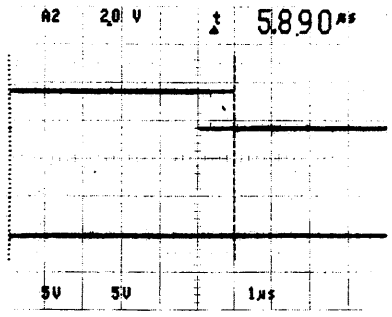 Fig. C	TP1300 CH1: ⊘RV103/APR-1(R-3) CH2: ⊘RV203/APR-1(M-3) TP1301 CH3: ⊘RV303/APR-1(K-3) CH4: ⊘RV403/APR-1(G-3) TRIG: TP1302/APR-1 (C-4)

4. Offset Level Check (for Board Suffix No. -13, 14, 22 or 23)

* More than 20 minutes should elapse after turning the power on, when this check is performed.

Preparations for adjustment	Specifications	Adjustments
• Supply no signal to the AUDIO INPUT connector. • AUDIO INPUT LEVEL switch (CH1 through CH4)/connector panel: HIGH/600 Ω ON • Connect CH1 and CH2 of the oscilloscope to TP1300(or TP1301) and TP1302 on the APR-1 board. **Step 1** • Check that lower 8 bits situate between Fig.B and Fig.C.	TP1300/ TP1301 FS: TP1302 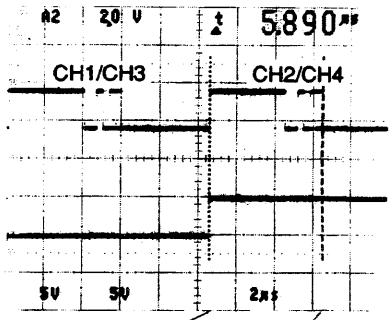 	Check
Step 2 When specification is not met • Adjust so that waveform of Fig.A appears.	MSB LSB 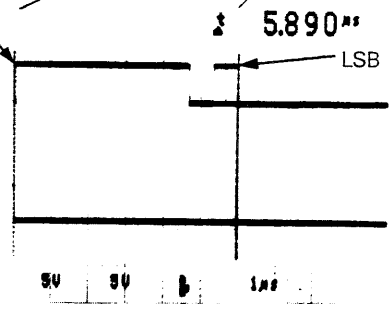 Fig. A MSB LSB Bit 18 … 8 7 6 5 4 3 2 1 Fig B: H … H H H L H L × × Fig A: H … H H H H L L × × Fig C: H … H H H H H L × × ×:Do not care 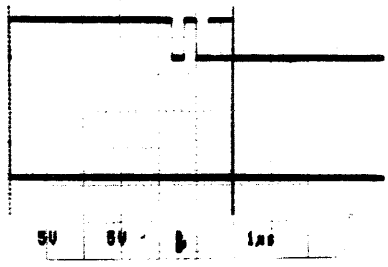 Fig. B 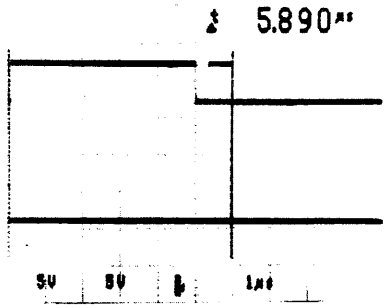 Fig. C	TP1300 CH1: ⊘RV103/APR-1(R-3) CH2: ⊘RV203/APR-1(M-3) TP1301 CH3: ⊘RV303/APR-1(K-3) CH4: ⊘RV403/APR-1(G-3) TRIG: TP1302/APR-1 (C-4)

6-5. ADJUSTMENT AFTER TBC-23 BOARD REPLACEMENT

When the TBC-23 board had been replaced, be sure to perform adjustment in accordance with the board suffix number.
When make a board replacement, ask to Sony service personnel.

SECTION 7
PERIODIC MAINTENANCE AND INSPECTION

7-1. CLEANING

To make the most of the functions, fully realize the performance of this unit, and to lengthen the life of the unit and tape, clean the components often.

7-1-1. General Information for Cleaning

1. Index

〈Mechanical Deck Block〉

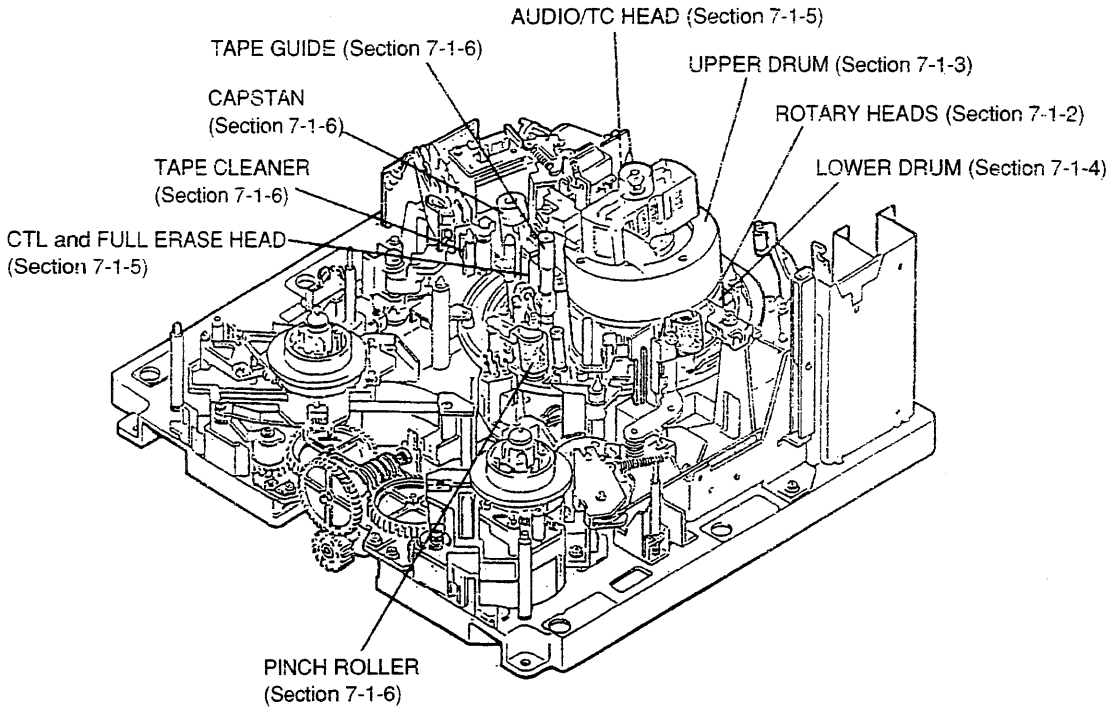

〈Cassette Compartment〉

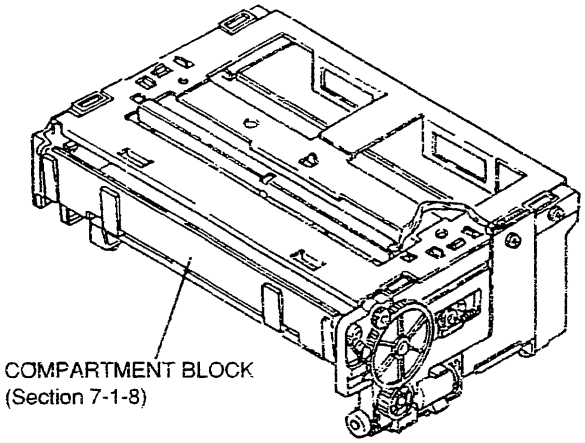

〈Unit〉

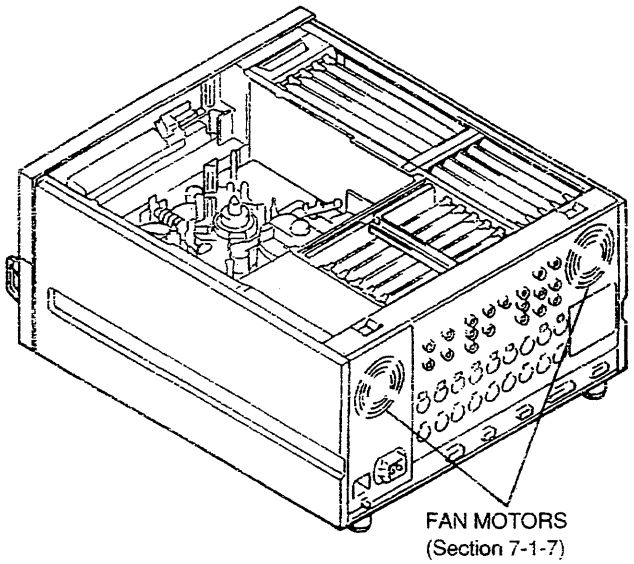

2. Cautions

- Turn the power off before cleaning.
- Each block in the mechanical deck consists of a precision part and is adjusted precisely. Be careful not to damage each part and to apply an excessive force during cleaning.
- Do not touch the greased portions during cleaning. If grease attaches to a cleaning cloth, replace the cleaning cloth by new one. If a cleaning cloth smeared with grease is used, grease may attach to the places where it should not.
- Do not insert a cassette tape before a cleaning fluid completely evaporates after cleaning.

3. Preparation

(1) Turn the power off.
(2) Remove the upper lid. (Refer to Section 1-2-1.)
(3) Remove the sound insulation plate (MD). (Refer to Section 1-3.)
(4) Remove the cassette compartment. (Refer to Section 1-2-2.)

7-1-2. Rotary Heads Cleaning

Caution
The rotary heads are the part that can be damaged easily. Be careful not to damage the rotary heads during cleaning.

Tools
- Cleaning cloth: 3-184-527-01
- Cleaning fluid: 9-919-573-01

Caution
Do not use a cotton swab to clean the rotary heads.

Procedures
1. Loosen the two screws and remove the upper drum cover.

   Note: These screws cannot be removed because of stoppers.

2. Hold the cleaning cloth moistened with cleaning fluid keeping it from becoming wrinkled. And press the cleaning cloth slightly against the rotary heads.

3. Rotate the inner drum slowly counterclockwise two or three turns and clean the rotary heads with the cleaning cloth held.

   Caution
   Be sure to rotate the inner drum counterclockwise and clean the rotary heads along the circumference. Do not rotate the inner drum in the direction opposite to the specified direction (clockwise) or clean it in the vertical direction. This may damage the rotary heads and the brush/slip ring assembly.

4. After cleaning, wipe it with a dry cleaning cloth two or three times.

5. Tighten the two screws while pressing the upper drum cover towards the drum support direction.

   Tightening torque: 14.7×10^{-2} N•m (1.5 kgf•cm)

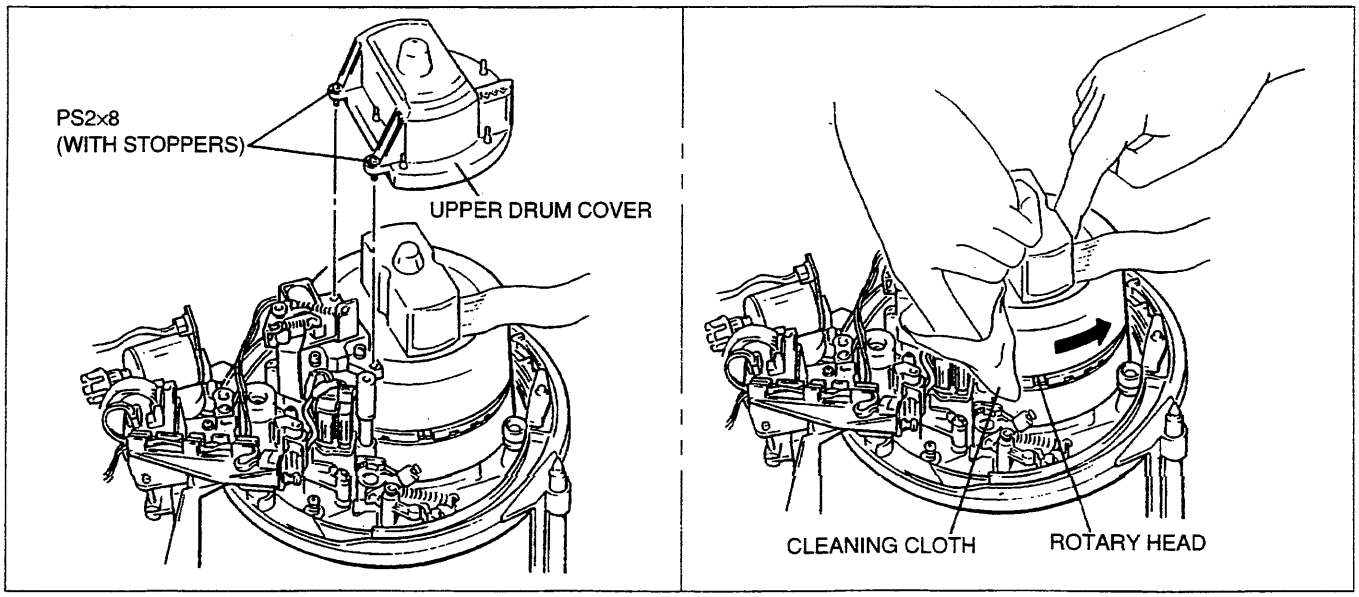

7-1-3. Upper Drum's Tape Running Surface Cleaning

Caution
Be careful not to damage the upper drum during cleaning. Pay careful attention when cleaning the edge portion below the upper drum because it is located near the rotary heads.

Tools
- Cleaning cloth: 3-184-527-01
- Cleaning fluid: 9-919-573-01

Procedures
1. Press the cleaning cloth moistened with a cleaning fluid slightly against the upper drum's tape running surface (shaded portion in the figure).

2. Clean the upper drum's tape running surface along the circumference two or three times.

   Caution
   Pay careful attention when cleaning the edge portion below the upper drum.

3. After cleaning, wipe it with a dry cleaning cloth two or three times.

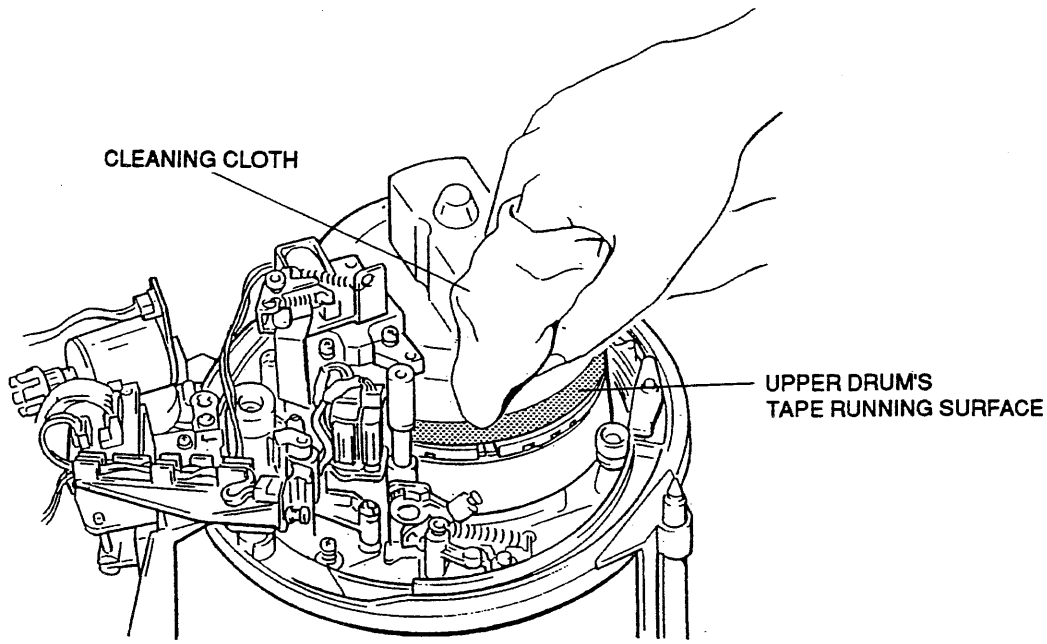

Upper Drum's Tape Running Surface Cleaning

7-1-4. Lower Drum's Tape Running Surface and Lead Surface Cleaning

Caution

Be careful not to damage the lower drum (specially lead surface) during cleaning. Pay careful attention when cleaning the edge portion above the lower drum because it is located near the rotary heads.

Tools

- Cleaning cloth: 3-184-527-01
- Cleaning fluid: 9-919-573-01
- Skewer or an equivalent (A metallic skewer cannot be used.)

Procedures

1. As shown in the figure, put a skewer (or an equivalent) along the drum lead surface and remove the magnetic powder.

   Caution

   1. Do not use a metallic skewer instead of the skewer. This may damage the tape running surface.
   2. Tracking may be badly influenced when magnetic powder attaches to the drum lead surface. Remove the magnetic powder completely during cleaning.

2. Clean the drum lead surface and lower drum's tape running surface (shaded portion in the figure) with a cleaning cloth moistened with a cleaning fluid.

3. After cleaning, wipe it with a dry cleaning cloth two or three times.

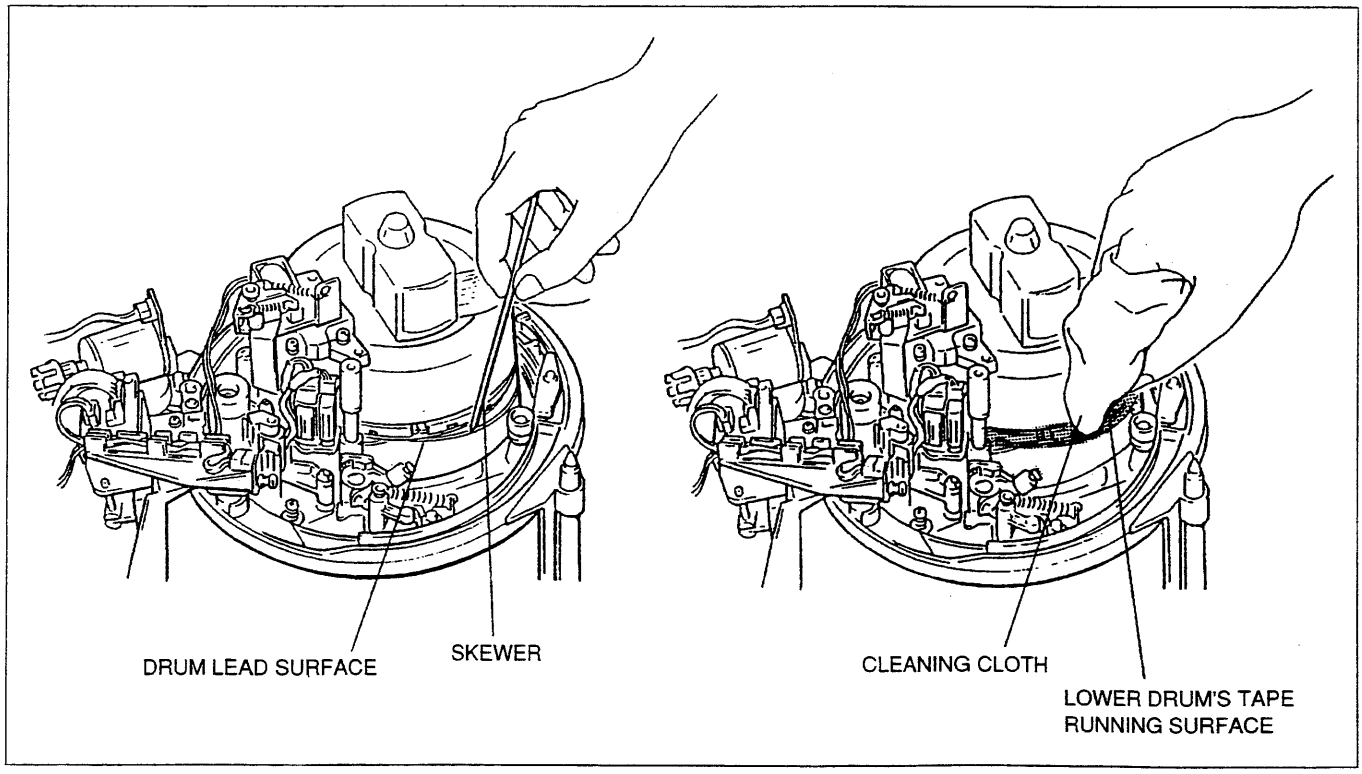

Lower Drum's Tape Running Surface and Lead Surface Cleaning

7-1-5. Stationary Heads Cleaning

Cautions
- Be careful not to damage the head surface when cleaning the stationary heads.
- The full erase head is not installed in a player.

Tools
- Cleaning cloth: 3-184-527-01
- Cleaning fluid: 9-919-573-01

Procedures
1. Clean the tape running surfaces of the audio/TC head, CTL head, and full erase head in the vertical direction with a cleaning cloth moistened with a cleaning fluid.

   Caution
   An error may occur in the recording or playback when magnetic powder attaches to the head gap portion of the audio/TC head, CTL head, and full erase head. Remove the magnetic powder completely during cleaning.

2. After cleaning, wipe it with a dry cleaning cloth two or three times.

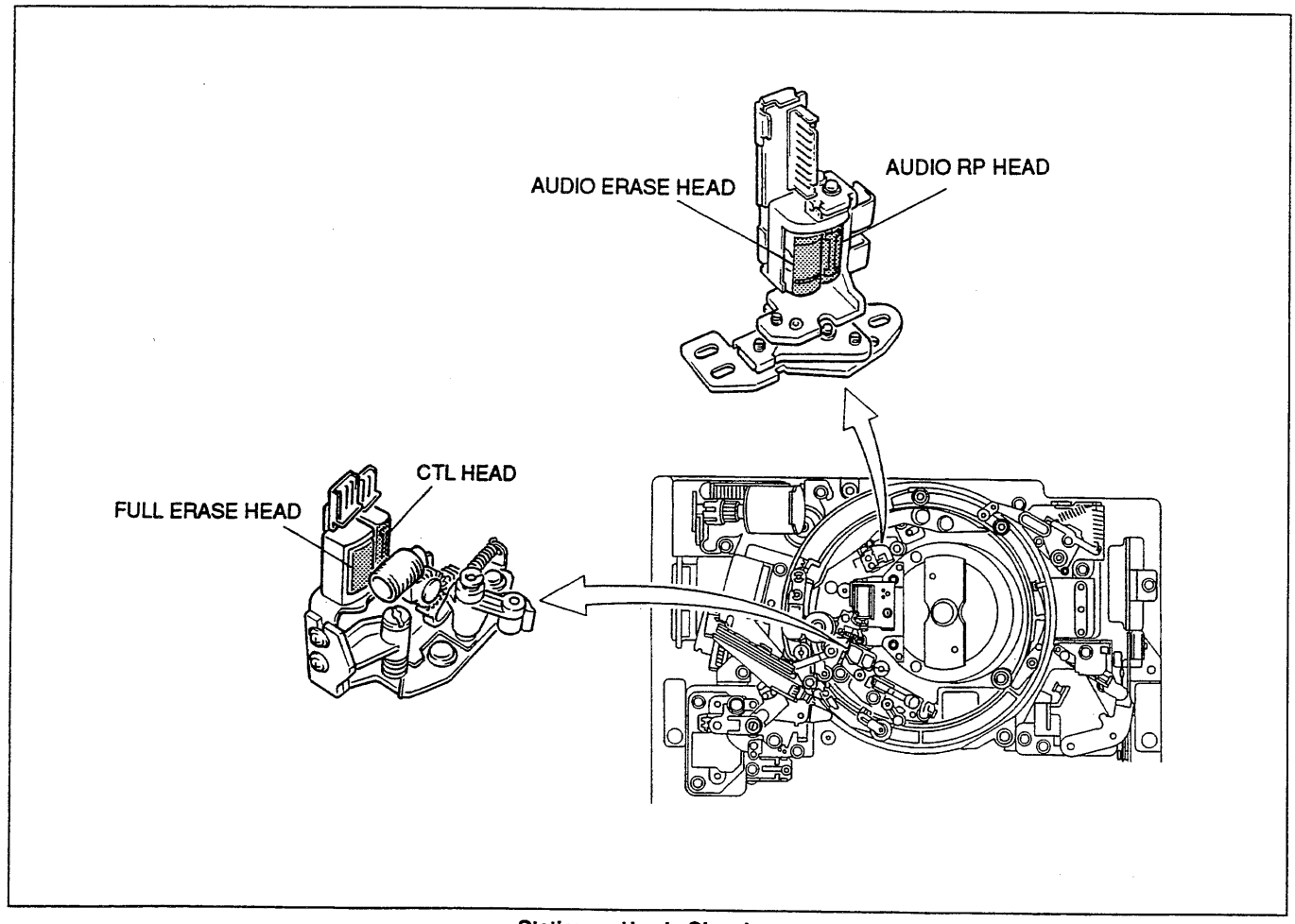

Stationary Heads Cleaning

7-1-6. Tape Running System and Tape Cleaner Cleaning

Warning
The tape cleaner has a sharp edge. Do not touch the edge with bare hands. Pay careful attention when cleaning the tape cleaner.

Tools
- Cleaning cloth: 3-184-527-01
- Cleaning fluid: 9-919-573-01

Procedures
1. Pass a piece of paper approximately this manual's paper thick through the clearance of the tape cleaner from top to bottom four or five times.
   At this time, do not move the paper from bottom to top.

2. Clean the tape running surfaces (shaded portions in the figure) of each guide with cleaning cloth moistened with a cleaning fluid.

3. After cleaning, clean it with a dry cleaning cloth two or three times.

   Warning
   Do not touch the edge portion of the tape cleaner with bare hands.

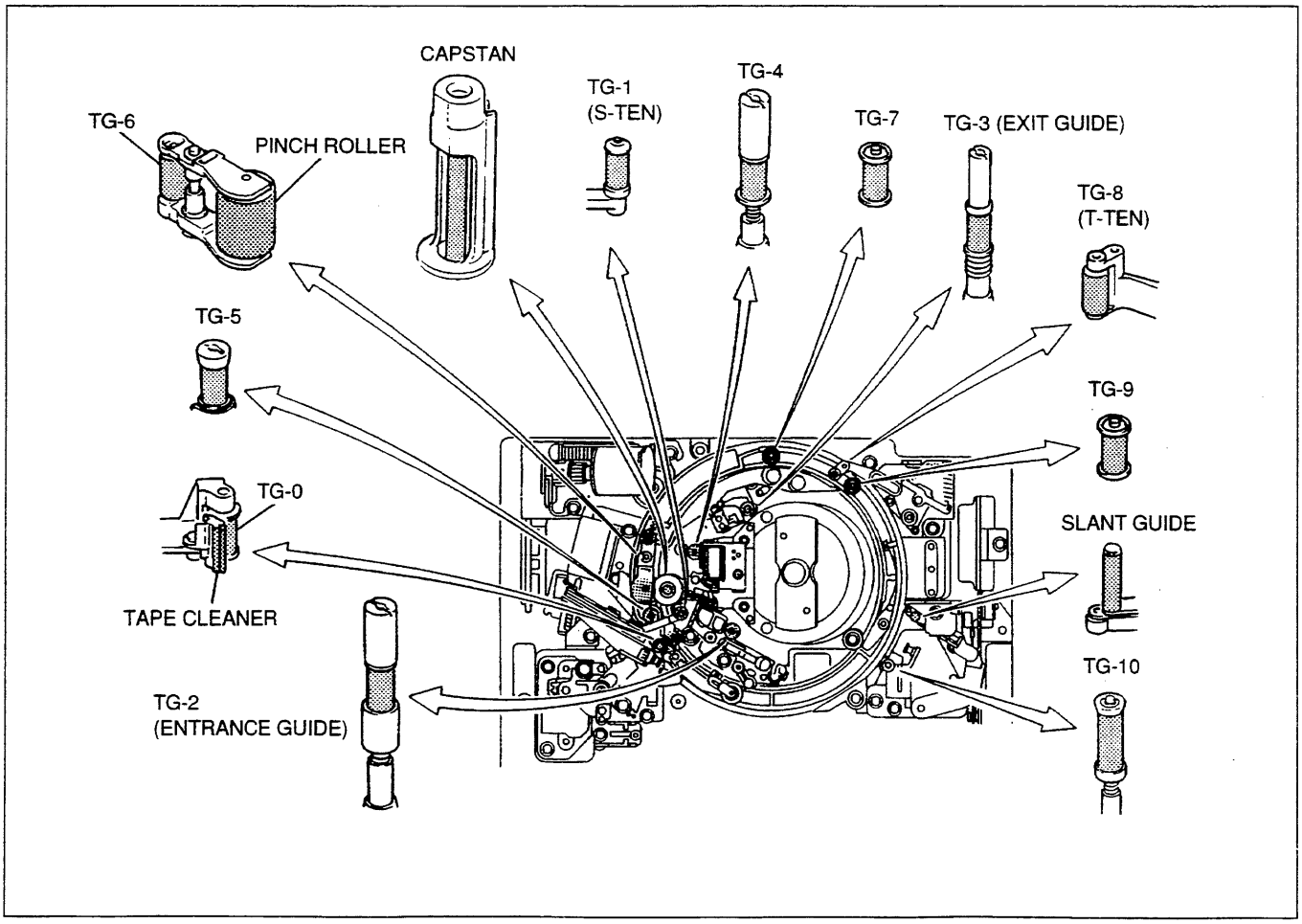

7-1-7. Fan Motor Cleaning

Caution

The temperature in the unit increases when dust attaches to the fan motor and when the air flow is disturbed. This may badly influence the performance and life of the unit. Clean the fan motor on the rear panel periodically because it accumulates dust easily.

Tools

- Cleaning cloth: 3-178-770-01
- Cleaning fluid: 9-919-573-01
- Vacuum cleaner

Procedures

1. Remove the power panel. (Refer to Section 1-2-1.)
2. Remove the connector panel. (Refer to Section 1-2-3.)
3. Remove the dust on the fan motors using a vacuum cleaner.
4. Clean the fin (shaded portion in the figure) with cleaning cloth moistened with cleaning fluid.
5. Install the connector panel. (Refer to Section 1-2-3.)
6. Install the power panel. (Refer to Section 1-2-1.)

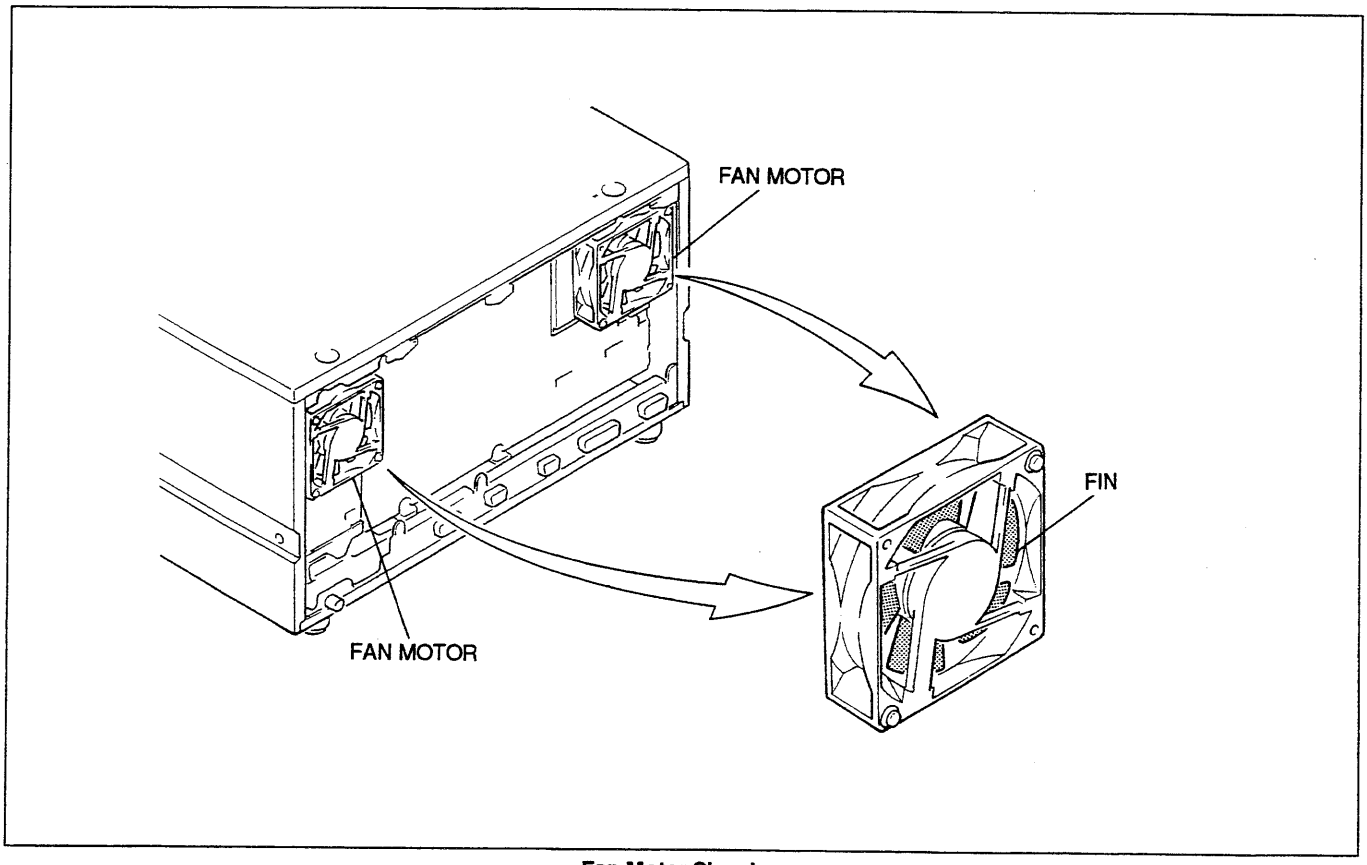

Fan Motor Cleaning

7-1-8. Cassette Compartment Cleaning

Cautions

- Be careful not to apply an excessive force to the compartment or the mirror when cleaning the cassette compartment.
- Do not clean the door and the mirror with alcohol. This may cause a crack.

Tools

- Cloth (or Gauze)
- Vacuum cleaner

Procedures

1. Remove the cassette compartment from the unit. (Refer to Section 1-2-2.)

2. Remove the dust on the cassette compartment from the cassette insertion inlet using a vacuum cleaner.

3. Clean the compartment (shaded portion in the figure) with a dry cloth (or gauze).

   Caution
   Do not apply an excessive force to the compartment block.

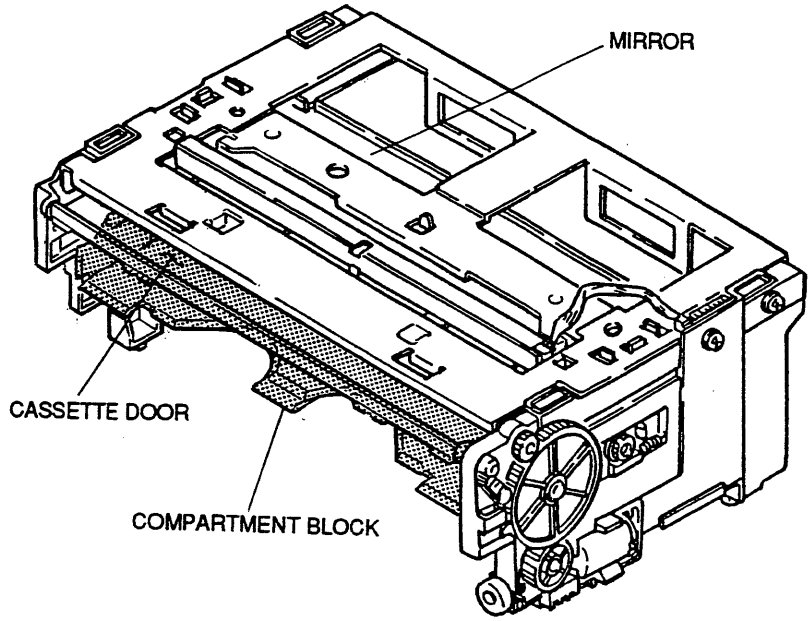

Cassette Compartment Cleaning

7-2. PERIODIC CHECK

To make the most of the functions, fully realize performance of the unit, lengthen the life of the unit and tape, a periodic check is recommended.

7-2-1. Hours Meter

This unit can display an hours meter on the time counter display of the upper control panel or on the monitor connected to this unit. Perform a periodic check with this hours meter as a reference.

1. **Display procedure**
   Refer to Section 1-10-2 in Installation Manual.

2. **Contents of display**

SET-UP MENU	DESCRIPTION	TIME COUNTER DISPLAY	MONITOR DISPLAY
H01: OPERATION HOURS	Accumulated hours when the power of the unit is on	Display the time by ten hours. (Note)	Display the time by an hour.
H02: DRUM RUNNING HOURS	Accumulated hours when the drum rotates in the threading end state	Display the time by ten hours. (Note)	Display the time by an hour.
H03: TAPE RUNNING HOURS	Accumulated hours when the tape runs in the F. FWD, REW, PLAY, SEARCH, REC and EDIT modes (not including STILL mode)	Display the time by ten hours. (Note)	Display the time by an hour.
H04: THREADING COUNTER	Accumulated number of threading and unthreading times	Display the number by ten times. (Note)	Display the actual number

(Note) While pressing the JOG or SHUTTLE button on the lower control panel, display the time by an hour (or display the actual number).

〈**Example**〉
In a case of the total hours that the power of the unit has been turned on is 12,345 hours:

- Time Counter Display

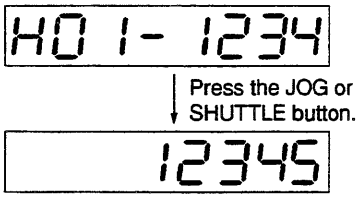

- Monitor Display

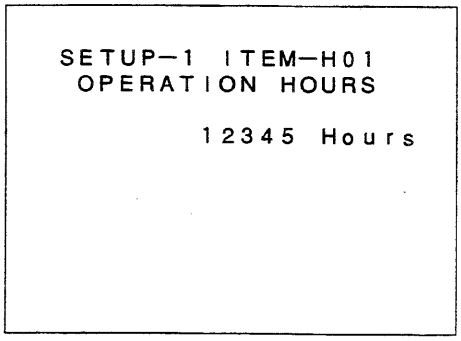

7-2-2. Periodic Check List

The replacement time shown in the table below is not the guarantee term of parts. Use this table as guidelines for maintenance and inspection. The replacement time of parts varies depending on the operating environment and conditions of the unit.

To maintain the steady performance, it is recommended to clean the tape running system and perform the RF system automatic adjustment every the following hours as a guide.

- every 50 hours (H02): Cleaning by cleaning tape (Refer to Section 1-11-1.)
- every 200 hours (H02): Perform the cleaning as the following procedure.
  1. Cleaning by cleaning tape (Refer to Section 1-11-1.)
  2. Cleaning by cleaning cloth (Refer to Section 7-1-2 through 7-1-6.)
- every 500 hours (H02): Execute the following automatic adjustment. (Refer to Section 5-8.)
  A12: ADV EQUALIZER
  A13: CONF EQUALIZER
  A18: REC CURRENT

Note: The part marked with "↓" in the table is replaced simultaneously with when the part in the column below its mark is replaced.

☆ : Replace the part. ◇ : Perform check (adjustment).

No.	Item	Menu No.	Inspection Hours (h)						Replacement Parts		
			1000	2000	3000	4000	5000	6000	Part Name	Part No.	Q'ty
Drum Block											
1	Inner Drum Assembly (Note 1)	H02	☆	☆	↓	☆	☆	↓	INNER DRUM ASSY DJR-02A-R: DVW-A500P DJR-04A-R: DVW-500P	 A-8260-687- A-8260-689-	 1 1
2	Brush/Slip Ring Assembly	H02	—	—	↓	—	—	↓	SR13 ASSY (RP), BRUSH: DVW-A500P SR9 ASSY (RP), BRUSH: DVW-500P	A-8267-571- A-8267-572-	1 1
3	Drum Assembly (Note 1)	H02	—	—	☆	—	—	☆	DRUM ASSY DJH-02A-R: DVW-A500P DJH-04A-R: DVW-500P	 A-8260-691- A-8260-693-	 1 1
Cleaners											
4	Cleaning Roller (Note 4)	H02	☆	☆	↓	☆	☆	↓	ROLLER ASSY, V CLEANING	X-3167-281-	1
5	Rotary Head Cleaner Assembly	H02	—	—	☆	—	—	☆	CLEANER ASSY, VIDEO HEAD	A-8267-398-	1
6	AT Head Cleaner	H02	☆	☆	☆	☆	☆	☆	ARM ASSY, CL	X-3167-053-	1
Tape Running System											
7	Pinch Roller	H03	☆	☆	☆	☆	☆	☆	ARM ASSY, PINCH	X-3167-054-	1
8	Audio/TC Head (Note 2)	H03	—	—	◇	—	—	☆	HEAD, AUDIO EPS244-2103G	8-825-778-22	1
9	CTL Head	H03	—	—	☆	—	—	☆	HEAD, CTL PS244-21B	8-825-554-83 8-825-554-84	1 1
10	Capstan Motor	H03	—	—	—	—	—	☆	MOTOR, DC SP37AA	1-698-179-12	1
Driving System											
11	Pinch Solenoid (Note 3)	H03	—	—	—	—	—	☆	SOLENOID, PLUNGER	1-454-338-00	1
		H04	Replace when used 200,000 times								
12	Brake Lining	H03	—	—	☆	—	—	☆	LINING ASSY	X-3717-205-	2
13	Reel Motor Assembly	H03	—	—	☆	—	—	☆	S Side: RM (PC) ASSY: DVW-A500P RM ASSY: DVW-500P T Side: RM (TPC) ASSY: DVW-A500P RM ASSY: DVW-500P	A-8267-964- A-8267-774- A-8310-086- A-6737-207-	1 1 1 1
Others											
14	Fan Motor	H01	Replace when used 10,000 H						FAN, DC	1-541-431-41	2
15	Filter of the Upper Drum Cover	H02	☆	☆	☆	☆	☆	☆	FILTER	3-182-649-	1

(Note 1) In an environmental condition of high humidity and excessive dust to operate the unit, it may cause in shortening the life of the heads.
Therefore, it is recommended to use the unit in an air-conditioned place at middle tempareture and humidity of the specifications, and lesser dust circumstances. In addition, the tapes should be kept in the same conditions.

(Note 2) ◇: Adjust the audio frequency response. (Refer to Section 8-7.)

(Note 3) Replace the pinch solenoid when the replacement time or count is reached whichever is earlier.

(Note 4) It is recommended to replace the CR spacer (3-182-765-) at the same time.

〈 **Mechanical Deck Block** 〉

Procedure
Refer to Section 8-2-1.
Refer to Section 8-2-2.
Refer to Section 8-2-3.
Refer to Section 8-2-4.
Refer to Section 8-2-4.
Refer to Section 8-2-5.
Refer to Section 8-2-7.
Refer to Section 8-2-8.
Refer to Section 8-2-9. Not Replacement
Refer to Section 8-2-10.
Refer to Section 8-2-11.
Refer to Section 8-2-12.
Refer to Section 8-2-13.
Refer to Section 8-2-14.
Refer to Section 8-2-15.

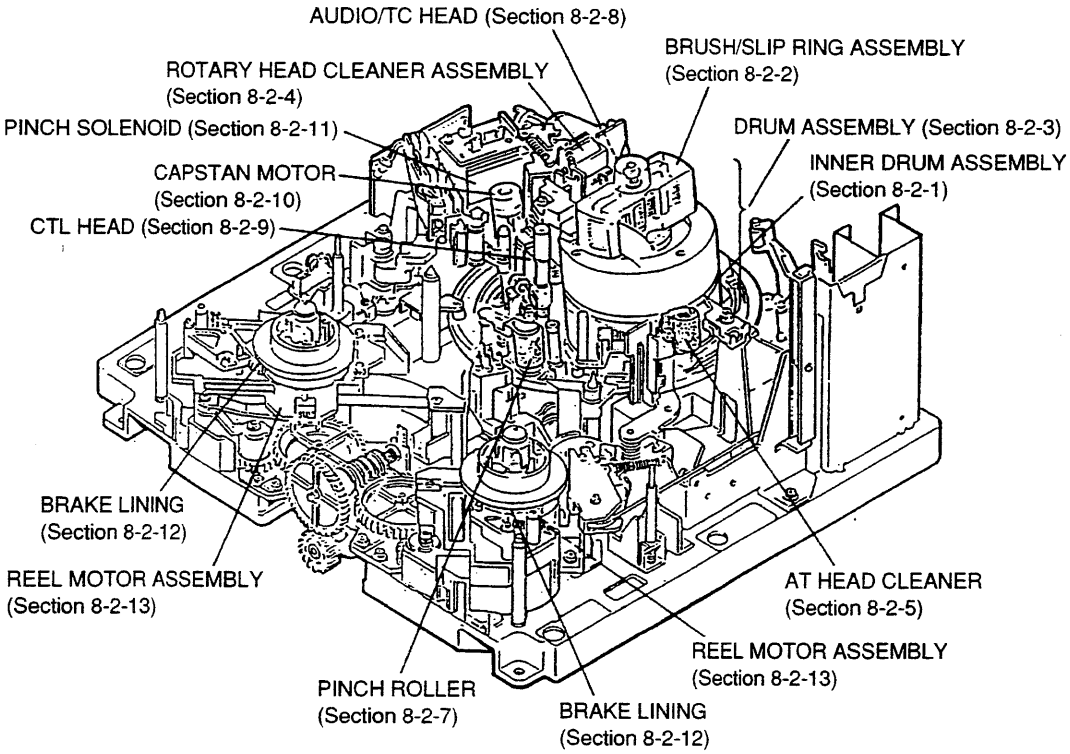

〈 **Unit** 〉

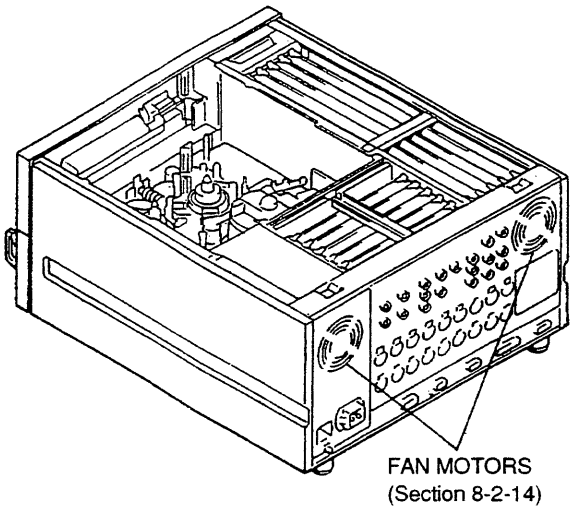

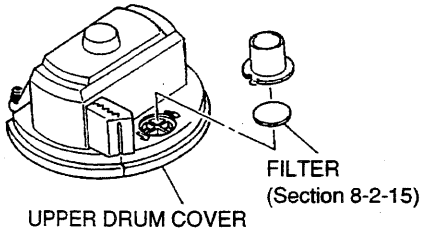

Note: Replace the parts shown in the table below periodically when the threading/ unthreading operation is repeated frequently.

No.	Item	Menu No.	Inspection Time	Replacement Parts		
				Part Name	Part No.	Q'ty
16	Brake Solenoid	H04	Replace when used 200,000 times	PLUNGER SOLENOID	1-454-417-31	2
17	S Tension Regulator Assembly			REGULATOR ASSY, TENSION	A-8267-795-	1
18	T Tension Regulator Assembly			T-TEN ASSY	A-8267-423-	1
19	T Drawer Arm Assembly			DRAWER ASSY, T	A-8267-381-	1
20	Gear Box Assembly			BOX ASSY, GEAR	A-8267-424-	1
21	Threading Ring Assembly			RING ASSY, THREADING	A-8267-395-	1
22	Ring Roller			ROLLER, RING ROLLER, RING B	3-180-677- 3-180-679-	2 1
23	Pinch Arm Guard			GUARD, PINCH ARM	3-180-853-	1
24	CL Guide Rail			RAIL, CL GUIDE	3-180-874-	1
25	Cassette Compartment Assembly			CASSETTE COMPARTMENT ASSY	A-8267-589-	1

(Note 5) Maintenance Manual Part 2 is distributed separately. If you wish to obtain one, please consult with Sony's service organization.

〈**Mechanical Deck Block**〉

	Procedure
	Refer to Volume 1 of MAINTENANCE MANUAL Part 2 (Note 5)
	Refer to Section 9-2-2. (Exploded view)
	Refer to Section 9-2-2. (Exploded view)
	Refer to Section 1-2-2.

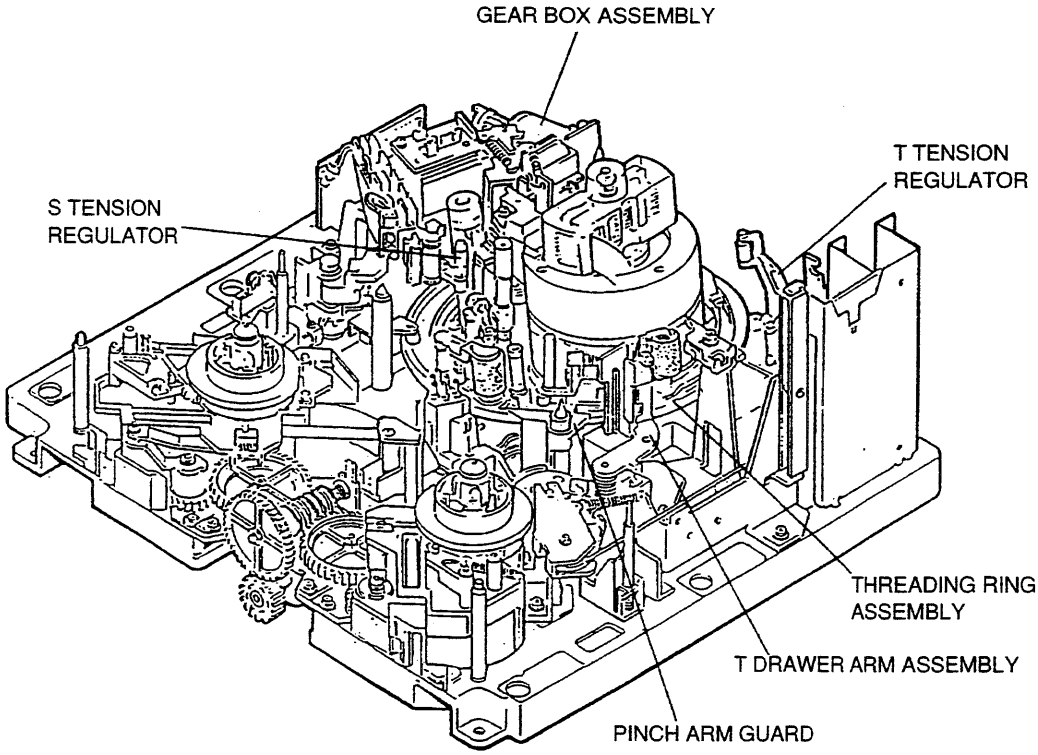

〈**Cassette Compartment**〉

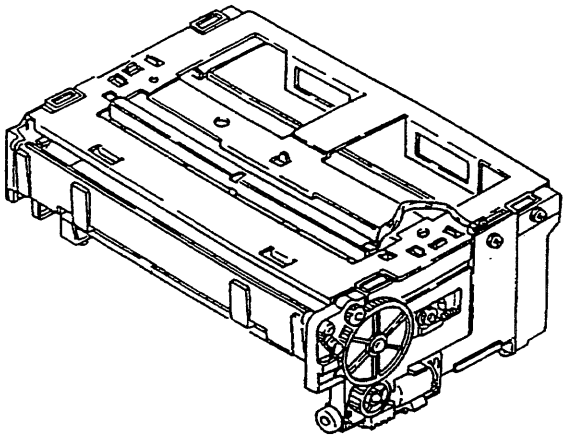

CASSETTE COMPARTMENT ASSEMBLY

SECTION 8
REPLACEMENT OF PERIODIC MAINTENANCE PARTS

8-1. GENERAL INFORMATION FOR PARTS REPLACEMENT AND ADJUSTMENT

8-1-1. Basic Knowledge

1. Tape Cleaner

Never touch the edge of the tape cleaner with bare hands.
It is in danger of cutting your finger because the tape cleaner has a sharp edge.
Pay careful attention when replacing or adjusting the peripheral parts.

2. Tools

- Clean the surface of the tool with a cleaning cloth moistened with cleaning fluid before use it.

  - Cleaning cloth: 3-184-527-01
  - Cleaning fluid: 9-919-573-01

- Be careful not to damage the tool. If the flawed tool is used, adjustment cannot be performed correctly.

8-1-2. Threading End Mode and Unthreading End Mode

1. Threading End Mode

Threading end mode means that the threading ring rotates in the counterclockwise direction, then stops.

There are three ways of putting the unit into the threading end mode without installing the cassette compartment.

Method ①: Turn the power on.

Method ②: Press the STOP button in power on state.

Method ③: Turn the M gear of the gear box assembly in the direction of the arrow A.

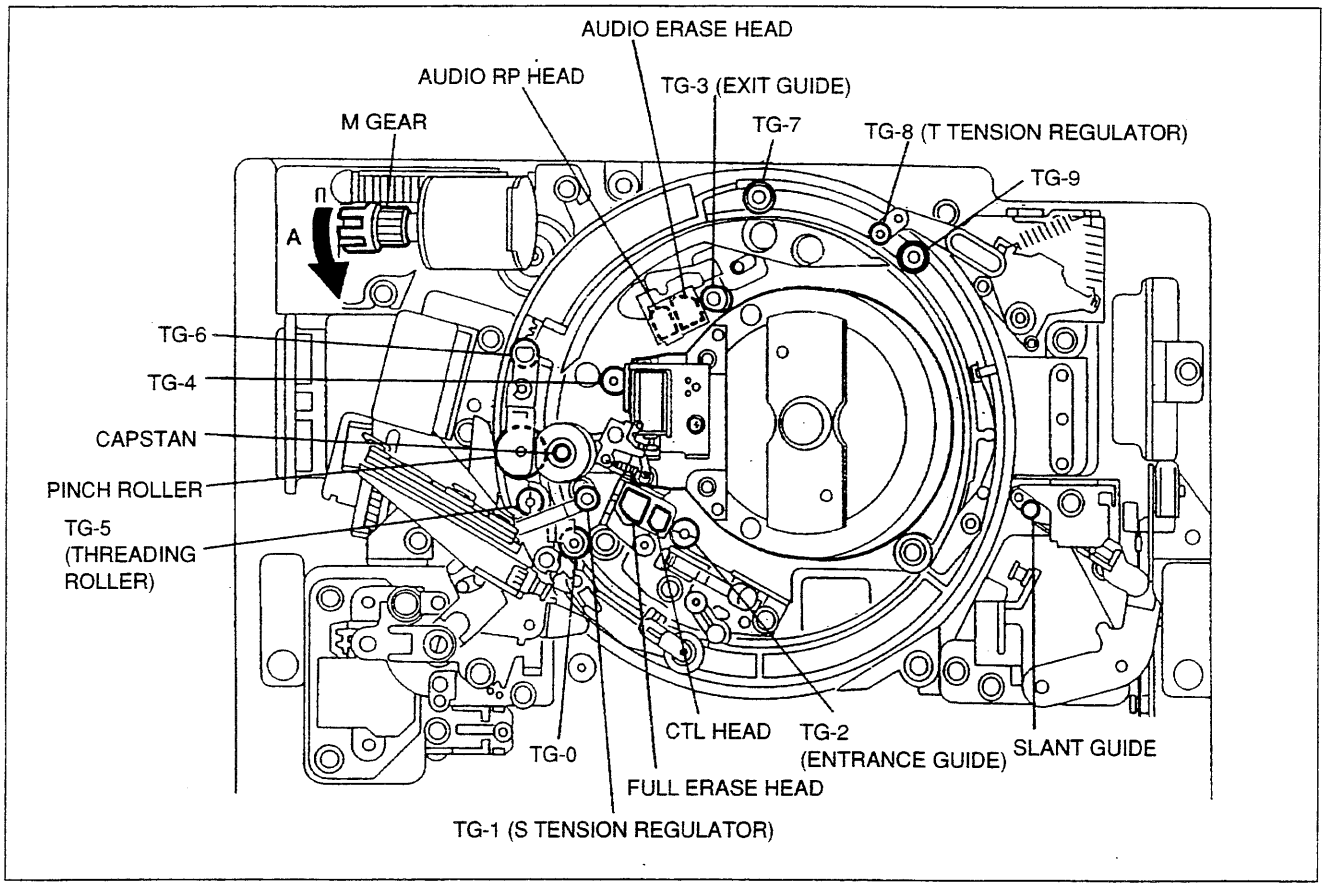

Threading End Mode

2. Unthreading End Mode

Unthreading end mode means that the threading ring rotates in the clockwise direction, then stops. (It is same state with EJECT completion mode.)

There are two ways of putting the unit into the unthreading end mode without installing the cassette compartment.

Method ①: Press the EJECT button in threading end mode.

Method ②: Turn the M gear of the gear box assembly in the direction of the arrow B.

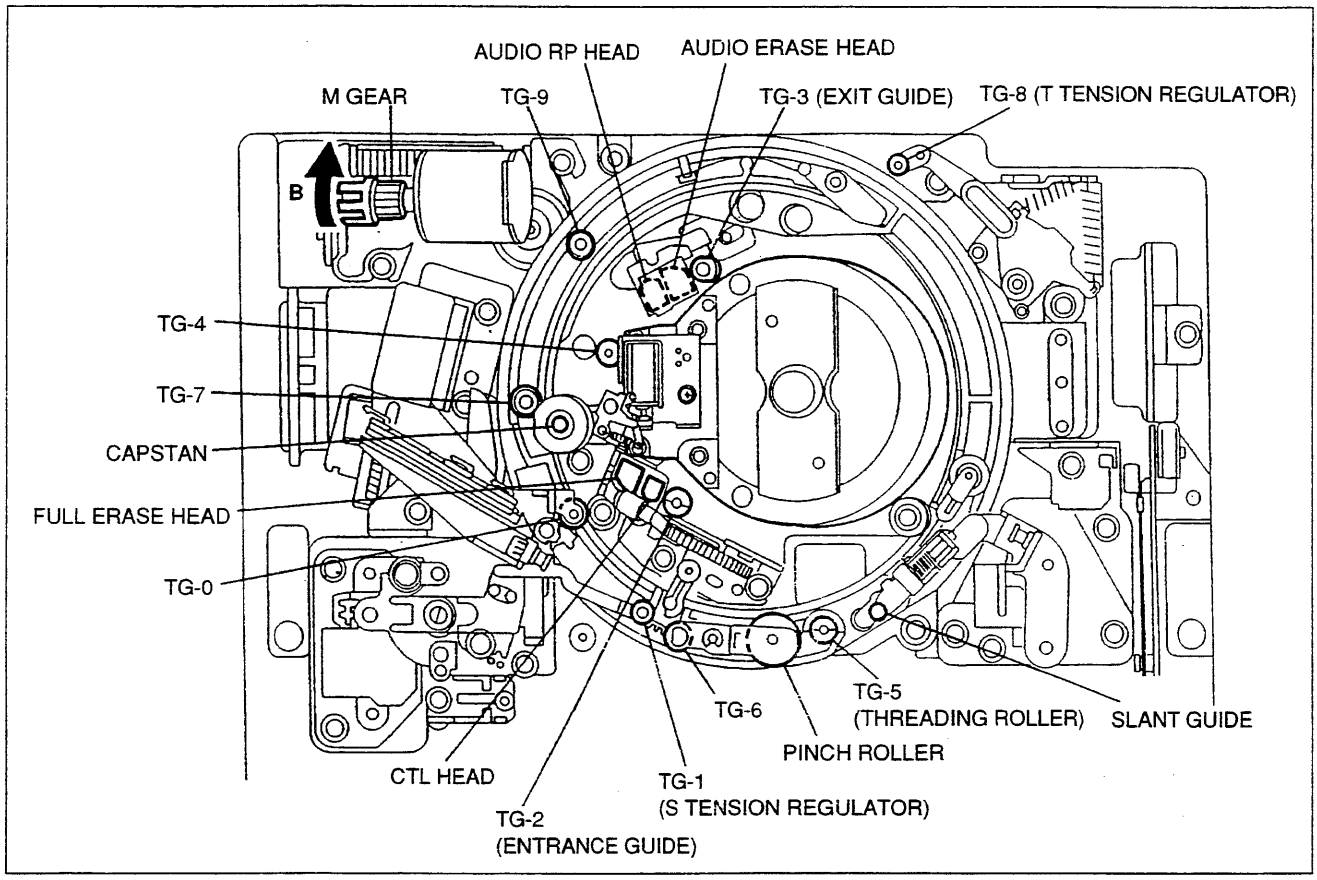

Unthreading End Mode

8-1-3. L Cassette Position and S Cassette Position

1. L Cassette Position

L cassette position means that the reel tables are in the position of L cassette tape.

There are two ways of putting the reel tables into the L cassette position without installing the cassette compartment.

Method ①: Press the switch S700 (C-1/side A) on the SS-52 board in power on state.

Method ②: Turn the drive gear in the direction of the arrow C.

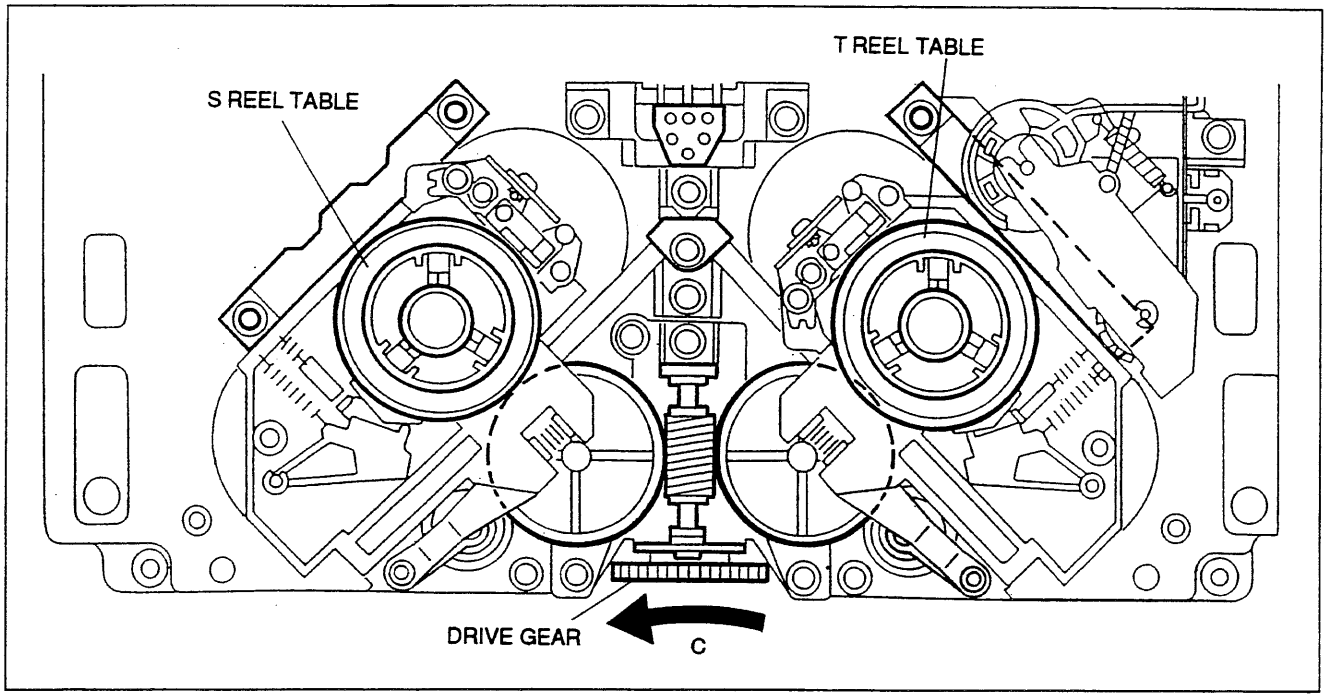

L Cassette Position

2. S Cassette Position

S cassette position means that the reel tables are in the position of S cassette tape.

There are two ways of putting the reel tables into the S cassette position without installing the cassette compartment.

Method ①: Press the switch S700 (C-1/side A) on the SS-52 board in power on state.

Method ②: Turn the drive gear in the direction of the arrow D.

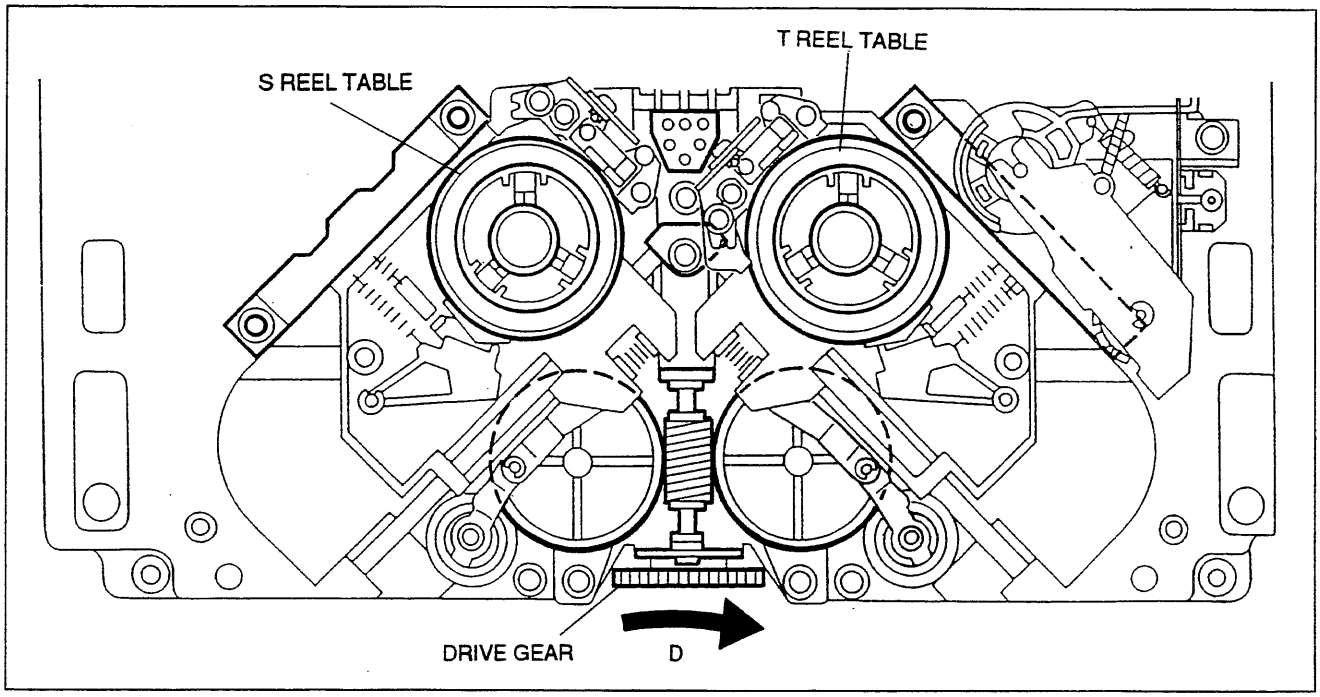

S Cassette Position

8-2. PARTS REPLACEMENT

1. Index

〈Mechanical Deck Block〉

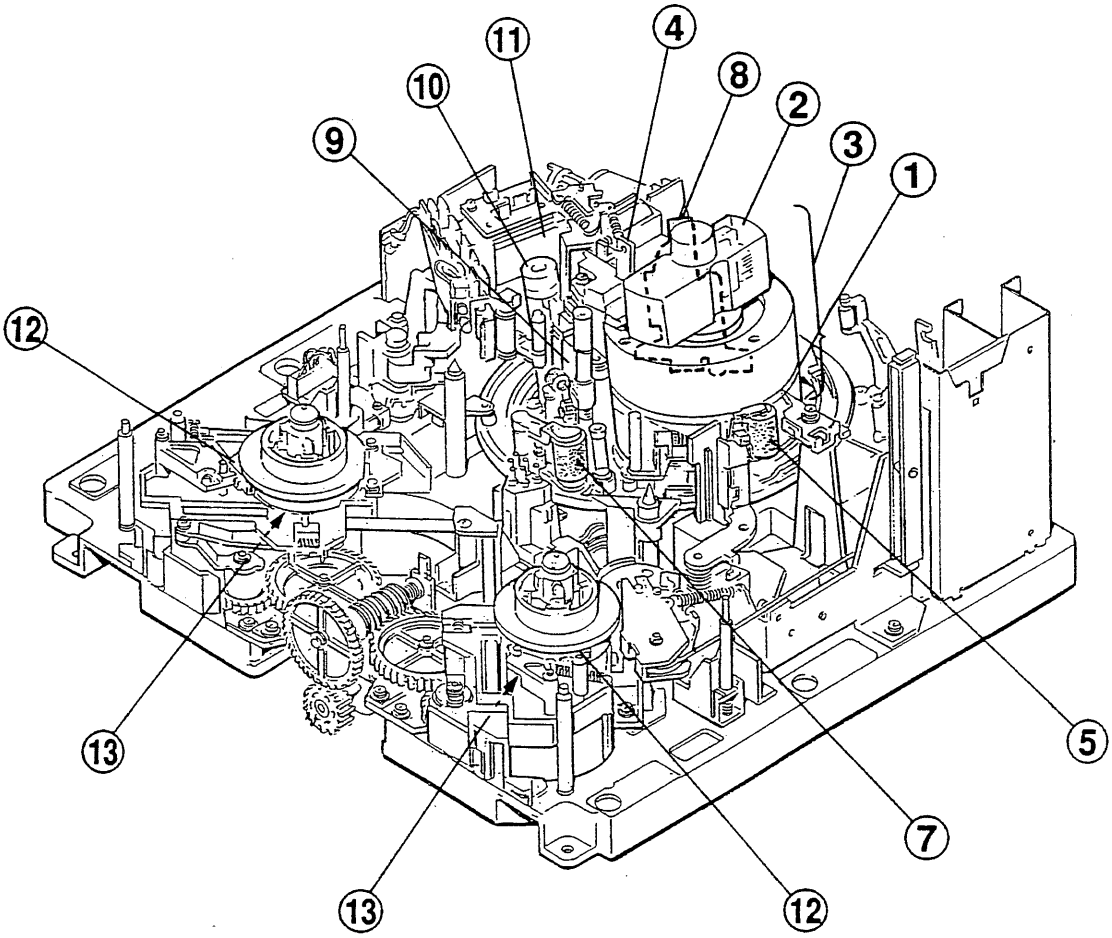

No.	Part Name	Page
1	Inner Drum Assembly	8-10
2	Brush/slip ring Assembly	8-24
3	Drum Assembly	8-26
4	Rotary Head Cleaner Assembly	8-32
5	AT Head Cleaner	8-34
7	Pinch Roller	8-38

No.	Part Name	Page
8	Audio/TC Head	8-40
9	CTL Head	8-44
10	Capstan Motor	8-48
11	Pinch Solenoid	8-52
12	Brake Lining	8-58
13	Reel Motor Assembly	8-60

〈Overall Block〉

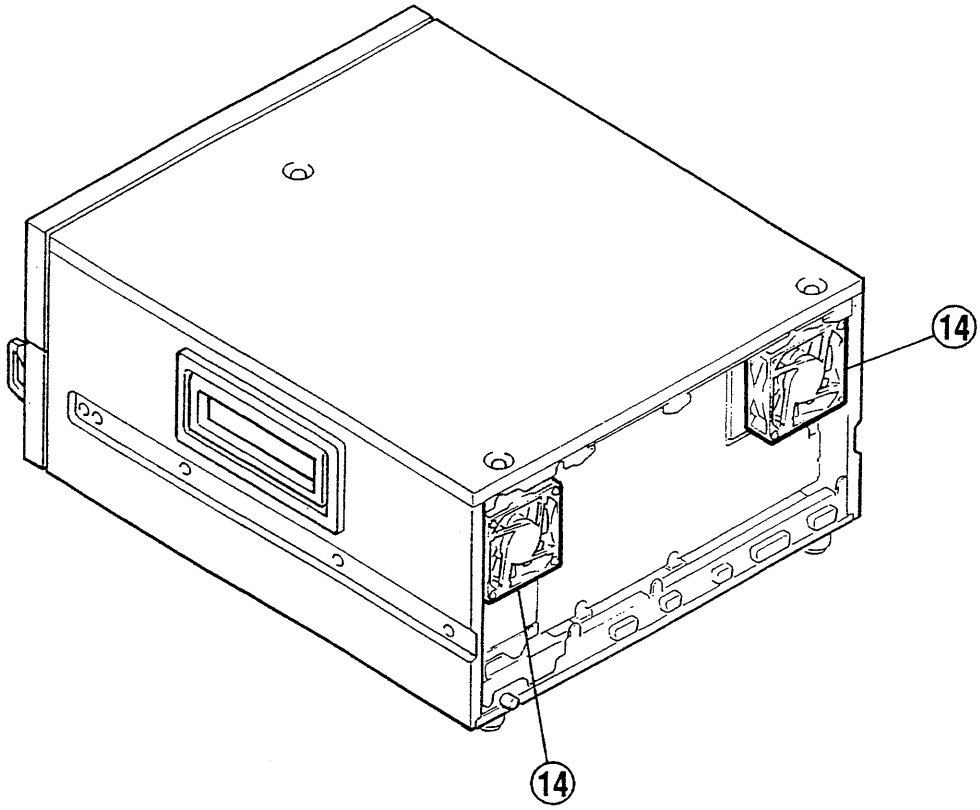

No.	Part Name	Page
14	Fan Motor	8-69

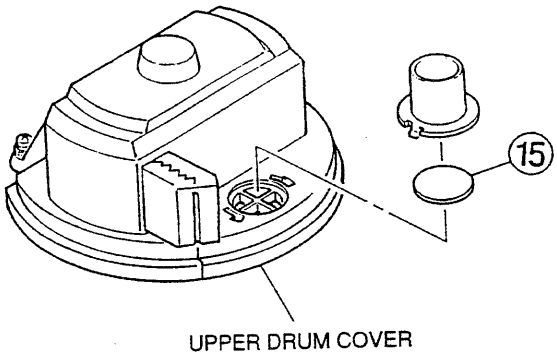

No.	Part Name	Page
15	Filter	8-70

2. Note

(1) Grease and Oil

- Please use only the specified grease and oil.
  If the different grease or oil is used, major malfunctions may be caused due to differences in viscosity and ingredients.
  And if the grease or oil is used that has been mixed with dust, major malfunctions may be caused.
  Please use the following grease and oil.

  - Grease (SGL-505): 7-662-010-04
  - Oil: 7-661-018-18

- Smear just enough grease to create a thin film on the surface of the part.
  Any grease that adheres to other surrounding parts must be wipe with gauze or soft cloth.

- A drop of oil is defined as follows:
  About the amount that will adhere to the end of a stick 2 mm in diameter, as shown in the figure.

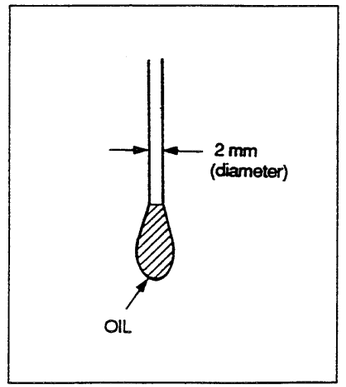

Oil

- Do not use the grease and oil except for specified portions.

(2) Stop Washer

It should not be used the stop washer once and again.

- Stop washer (d=2.3 mm): 3-669-596-00

3. Preparation

(1) When replacing parts on the upper surface of the mechanical deck

- except DVW-CA510P/CA510

① Turn the power off.
② Remove the upper lid. (Refer to Section 1-2-1.)
③ Remove the plate MD. (Refer to Section 1-3.)
④ Remove the cassette compartment. (Refer to Section 1-2-2.)

- DVW-CA510P/CA510

① Turn the power off.
② Remove the upper lid. (Refer to Section 1-3-1.)
③ Remove the ejector assembly. (Refer to Section 1-4.)
④ Remove the cassette compartment. (Refer to Section 1-3-2.)

(2) When replacing parts on the bottom surface of the mechanical deck

- except DVW-CA510P/CA510

① Turn the power off.
② Remove the upper lid. (Refer to Section 1-2-1.)
③ Remove the plate MD. (Refer to Section 1-3.)
④ Remove the cassette compartment. (Refer to Section 1-2-2.)
⑤ Remove the bottom plate. (Refer to Section 1-2-1.)
⑥ Remove the plate BT.

- DVW-CA510P/CA510

① Turn the power off.
② Remove the upper lid. (Refer to Section 1-3-1.)
③ Remove the ejector assembly. (Refer to Section 1-4.)
④ Remove the cassette compartment. (Refer to Section 1-3-2.)
⑤ Remove the bottom plate. (Refer to Section 1-3-1.)
⑥ Remove the plate BT.

8-2-1. Inner Drum Assembly Replacement

Outline

Replacement
1. Remove the Rotary Head Cleaner Assembly
2. Remove the Upper Drum Cover
3. Disconnect the Flexible Board (CN241/HN-185 Board)
4. Remove the Brush/Slip Ring Assembly
5. Remove the Upper Drum Assembly
6. Remove the Inner Drum Assembly
7. Cleaning (Inner Drum Assembly Mounting Surface, Drum Support Mounting Surface, Lower Drum Flange Surface, Tape Running Surface, Lead Surface, and Contacting Points)
8. Install the Inner Drum Assembly
9. Install the Upper Drum Eccentricity Adjustment Tool
10. Adjust the Inner Drum Eccentricity
11. Remove the Upper Drum Eccentricity Adjustment Tool
12. Cleaning (Height Determining Plate's Lower Surface, Drum Support's Upper Surface, and Upper Drum Contacting Surface)
13. Install the Upper Drum Assembly
14. Cleaning (DR-205 Board's Contacting Points and Brush/Slip Ring Assembly Mounting Surface)
15. Install the Brush/Slip Ring Assembly
16. Connect the Flexible Board (CN241/HN-185 Board)
17. Cleaning (Rotary Heads and Upper Drum's Tape Running Surface)
18. Install the Upper Drum Cover
19. Install the Rotary Head Cleaner Assembly
Adjustment after Replacement
20. Confirm the Tape Running (Refer to Section 8-4-2.)
21. Confirm the Video Tracking (Refer to Section 8-4-3.)
22. Confirm the CTL Head Height (Refer to Section 8-4-4.)
23. Adjust the CTL Head Position (Refer to Section 8-4-5.)
24. Confirm the Audio/TC Head Height (Refer to Section 8-4-6.)
25. Adjust the Audio/TC Head Position (Refer to Section 8-4-9.)
26. Perform the Servo/DT and RF Adjustment (Refer to Section 8-5.)
27. Perform the Adjustment after Drum Replacement (Refer to Section 8-6.)

Note

When the rotary head tip was worn or damaged, replace the inner drum assembly. It cannot be replaced only head tip.

Basic Knowledge

For except the periodic replacement time, replace the inner drum assembly in the following case.

- A correct RF signal waveform cannot be obtained even if the tracking adjustment is performed.

Tools

- Hexagonal wrench driver (2.5 mm): 7-700-766-04
- Torque screwdriver (6 kg•cm)(JB-5251): J-6252-510-A
- Torque screwdriver (12 kg•cm)(JB-5252): J-6252-520-A
- Torque screwdriver's bit (+ 2 mm, l=75 mm): J-6323-420-A
- Torque screwdriver's hexagonal bit (d=2.5 mm, l=120 mm): J-6251-090-A

- Cleaning cloth: 3-184-527-01
- Cleaning fluid: 9-919-573-01

- Upper drum eccentricity adjustment tool (1): J-6001-840-A
  or upper drum eccentricity adjustment tool (6): J-6325-530-A
- Upper drum eccentricity adjustment tool (2): J-6001-830-A
- Upper drum eccentricity adjustment tool (3): J-6001-820-A
- Upper drum eccentricity adjustment tool (5): J-6087-000-A

Note1: The eccentricity adjustment tool is named an "upper drum eccentricity adjustment tool" in this case. In this unit, the eccentricity value of the inner drum is measured.

Note2: The upper drum eccentricity adjustment tool is assembled for use as shown in the figure.

Note3: The following tool is able to use instead of using the upper drum eccentricity adjustment tool (3) and (5).
- Upper drum eccentricity adjustment tool (7): J-6324-030-A

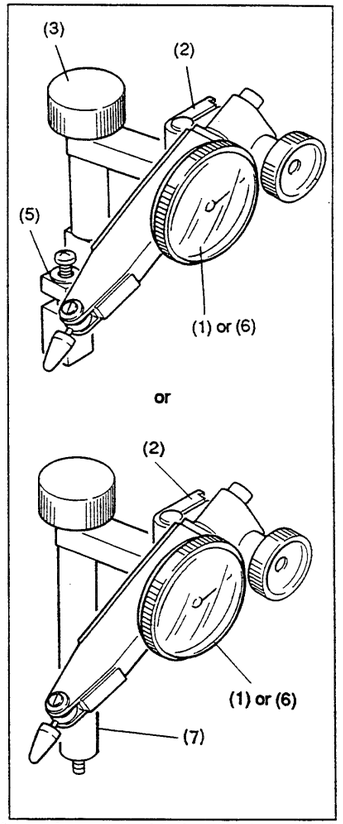

Upper drum eccentricity adjustment tool

Removal

1. **Remove the Rotary Head Cleaner Assembly**
   (1) Disconnect the connector from connector CN232 on the HN-184 board.
   (2) Cut the harness clamper.
   (3) Remove the harness from the sensor holder.
   (4) Remove the screw, shift the rotary head cleaner assembly in the direction indicated by the arrow A, and remove it from the drum support.

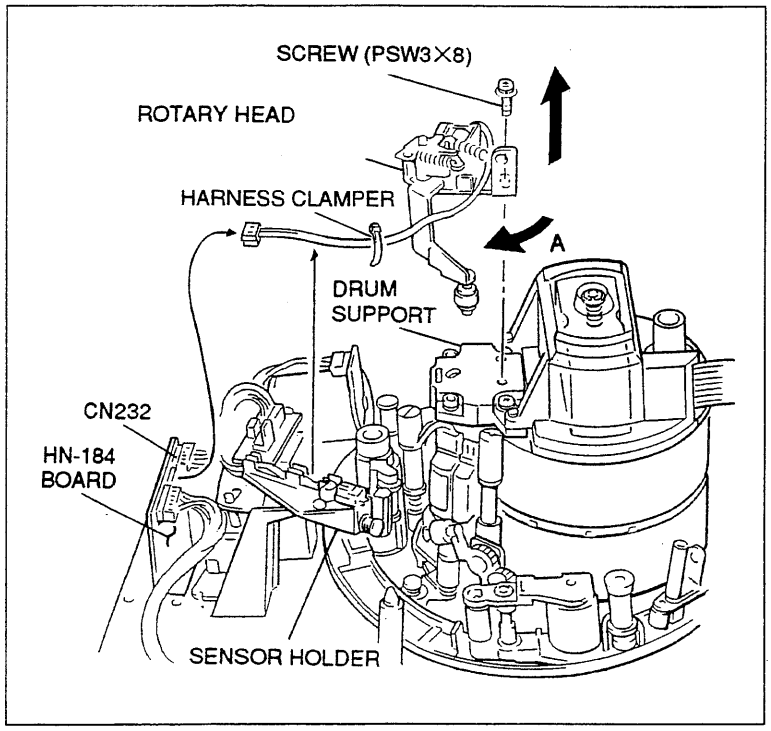

Remove the Rotary Head Cleaner Assembly

2. **Remove the Upper Drum Cover**
   Loosen the two screws and remove the upper drum cover.

   Note: These screws cannot be removed because of stoppers.

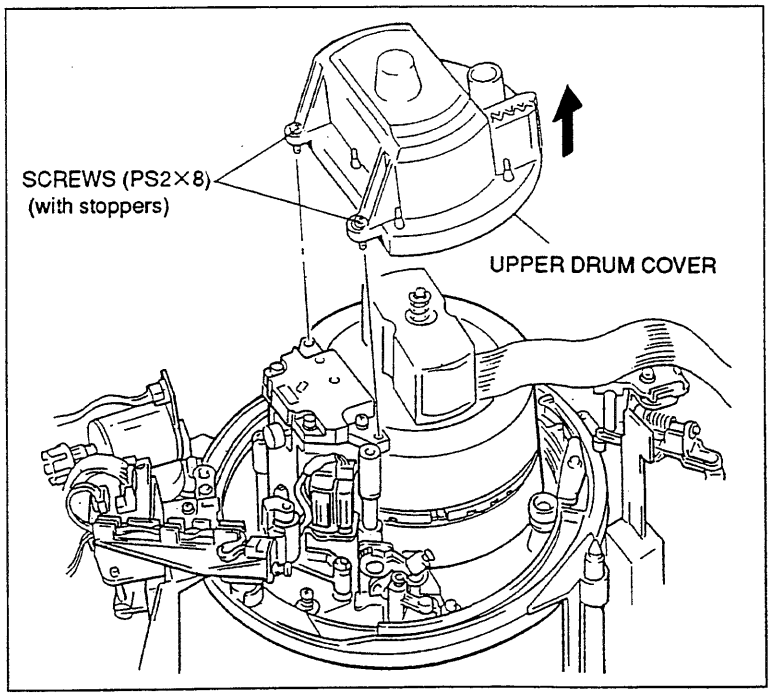

Remove the Upper Drum Cover

3. **Disconnect the Flexible Board**
   Disconnect the flexible board from connector CN241 on the HN-185 board.

4. **Remove the Brush/Slip Ring Assembly**
   Remove the two screws, then remove the brush/slip ring assembly.

   Caution
   1. Do not apply excessive force to the brush/slip ring assembly at that time.
   2. If the screws remain put into the screw holes of the brush/slip ring assembly, remove them once. When the brush/slip ring assembly is turned upside down, these screws may be dropped into the slip ring cover.

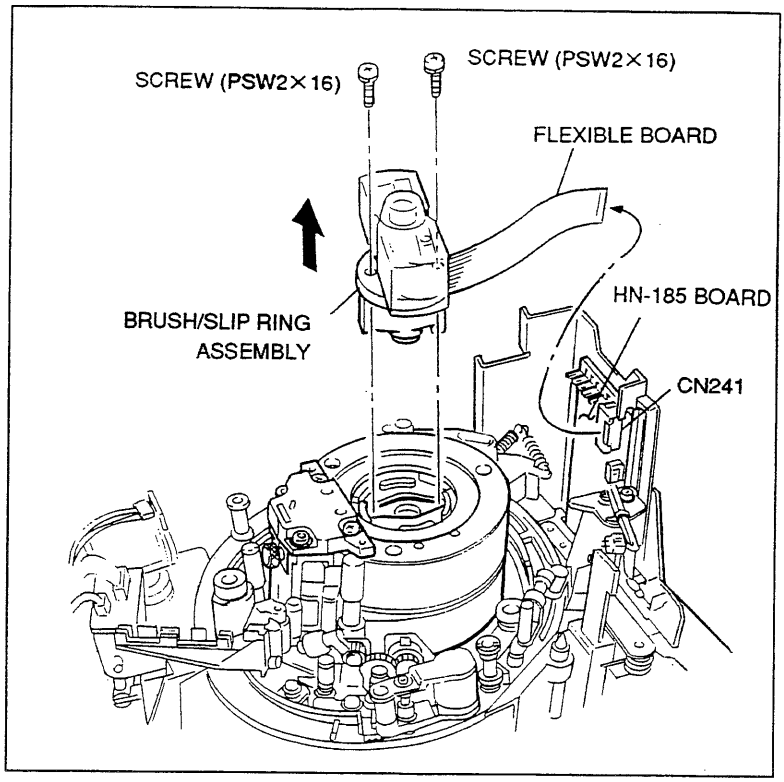

Remove the Brush/Slip Ring Assembly

5. **Remove the Upper Drum Assembly**
   (1) Rotate the knob manually by about seven turns, then loosen.
   (2) Remove the two screws using a hexagonal wrench driver.
   (3) Raise the upper drum assembly just above, then remove.

   Caution
   1. Be careful not to damage the tape running surface and the contacting surface (shaded portion in the figure) of the upper drum when removing the upper drum assembly. Also, take care not to damage the lower edge portion of the upper drum.
   2. Be sure to put the removed upper drum assembly with the upper surface (on which the height determining plate is installed) down. If not, the edge portion may be damaged.
   3. Be careful not to damage the drum support mounting surface and lower drum's upper edge portion after the upper drum assembly was removed.

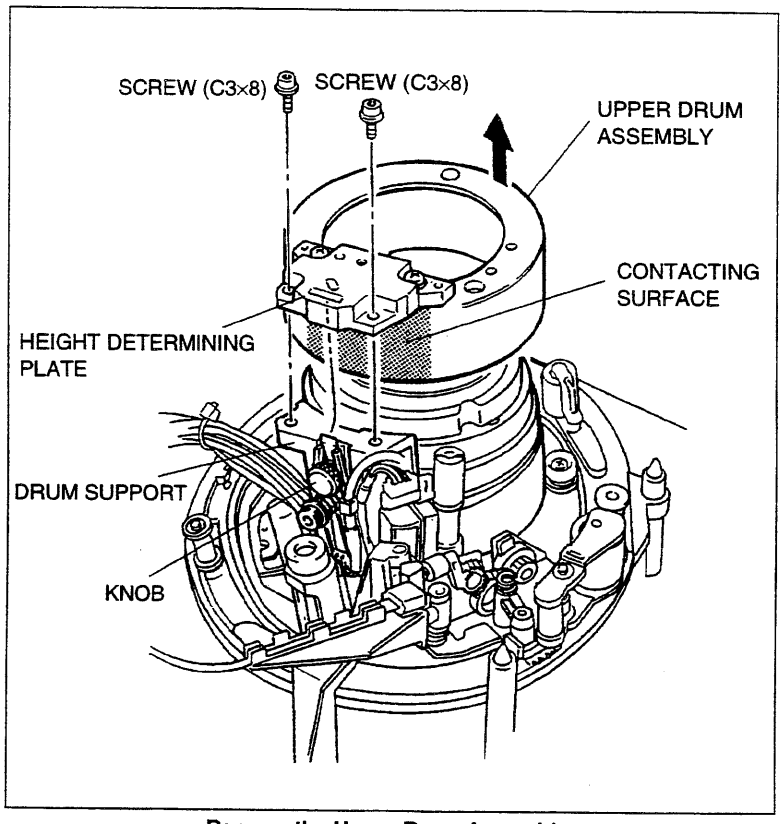

Remove the Upper Drum Assembly

6. Remove the Inner Drum Assembly

(1) Insert the hexagonal wrench driver from the screw hole and loosen the screw fully.

Note: The inner drum assembly is fixed with the four fixing screws (C3x12) in the screw holes. These screws cannot be removed because of stoppers.

(2) Remove the inner drum assembly while inclining it as shown in the figure.

Caution

Be careful not to damage the upper drum contacting surface of the drum support.

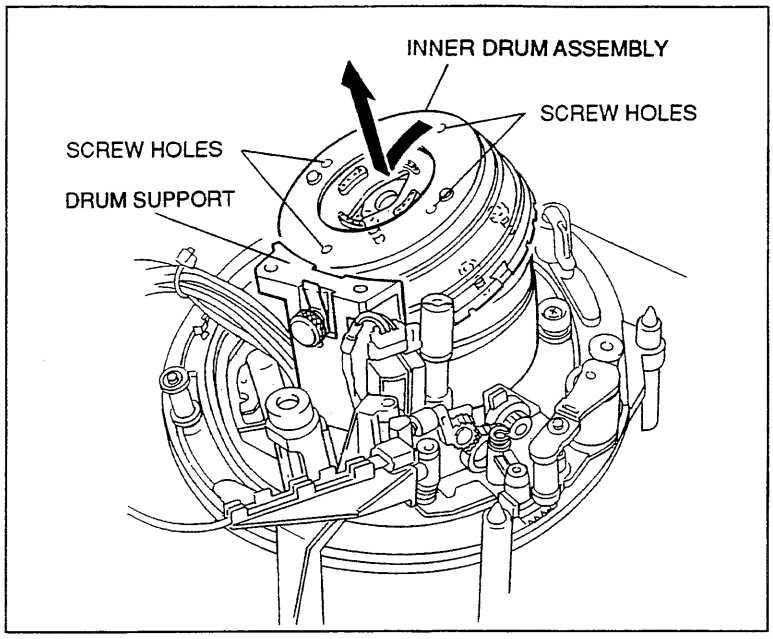

Remove the Inner Drum Assembly

Installation

Caution

The inner drum assembly for repair has an inner drum cover. This cover is provided to protect the rotary heads. Do not remove the inner drum cover until the inner drum assembly has been installed.

7. Cleaning

(1) Clean the portion below with a cleaning cloth moistened with cleaning fluid.
- New inner drum assembly mounting surface (shaded portion shown in the figure)
- Drum support's upper drum mounting surface (shaded portion shown in the figure)
- Lower drum flanges (shaded portion shown in the figure) and edge portion
- Lower drum's tape running surface and lead portion (Refer to Section 7-1-4.)

Caution

After cleaning, wipe with a dry cleaning cloth.

(2) Wipe the portion below with a dry cleaning cloth.
- Lower drum's contacting points

Caution

Do not apply cleaning fluid to the contacting points.

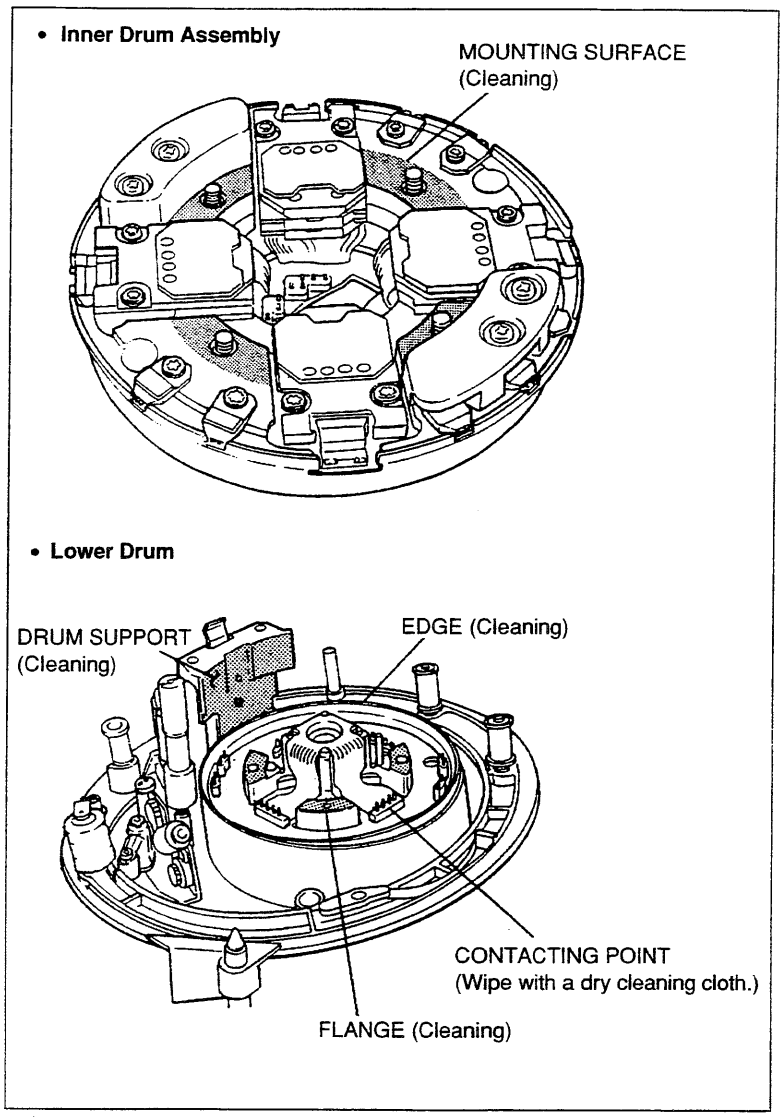

Cleaning

8. Install the Inner Drum Assembly

When installing the inner drum assembly in the unit with an analog playback function, be sure to check the following items.

Before installing the inner drum assembly

- Loosen the knob (a) sufficiently. (Fig. 2)

Caution

Be careful not to drop the knob (a).

- Loosen the screw (b) about 1.5 turns.(Fig. 2)

After installing the inner drum assembly

- Tighten the screw (b) about 1.5 turns.

(1) Place the hole (A) on the positioning pin side on DR-202 board into the center position of the drum support.

Caution

At this time, be careful not to touch the contacting points and flanges.

(2) Align the hole (A) on the positioning pin side on DR-202 board with positioning hole (B) on the inner drum cover. (Fig. 1)

(3) Put the inner drum assembly on the lower drum gently in the slanting direction with care not to touch the drum support. (Fig. 2)

Caution

1. Do not hold the claws of the inner drum cover when installing the inner drum assembly.
2. Be careful not to touch the audio/TC head, peripheral tape guides and drum support when installing the inner drum assembly.
3. Do not turn the inner drum while the inner drum cover is installed.

(4) Tighten the four screws (C3×12) tentatively and equally while pushing the inner drum downward.

(5) Press the claws of the inner drum cover in the direction indicated by the arrow and raise the inner drum cover up, then remove it. (Fig. 3)

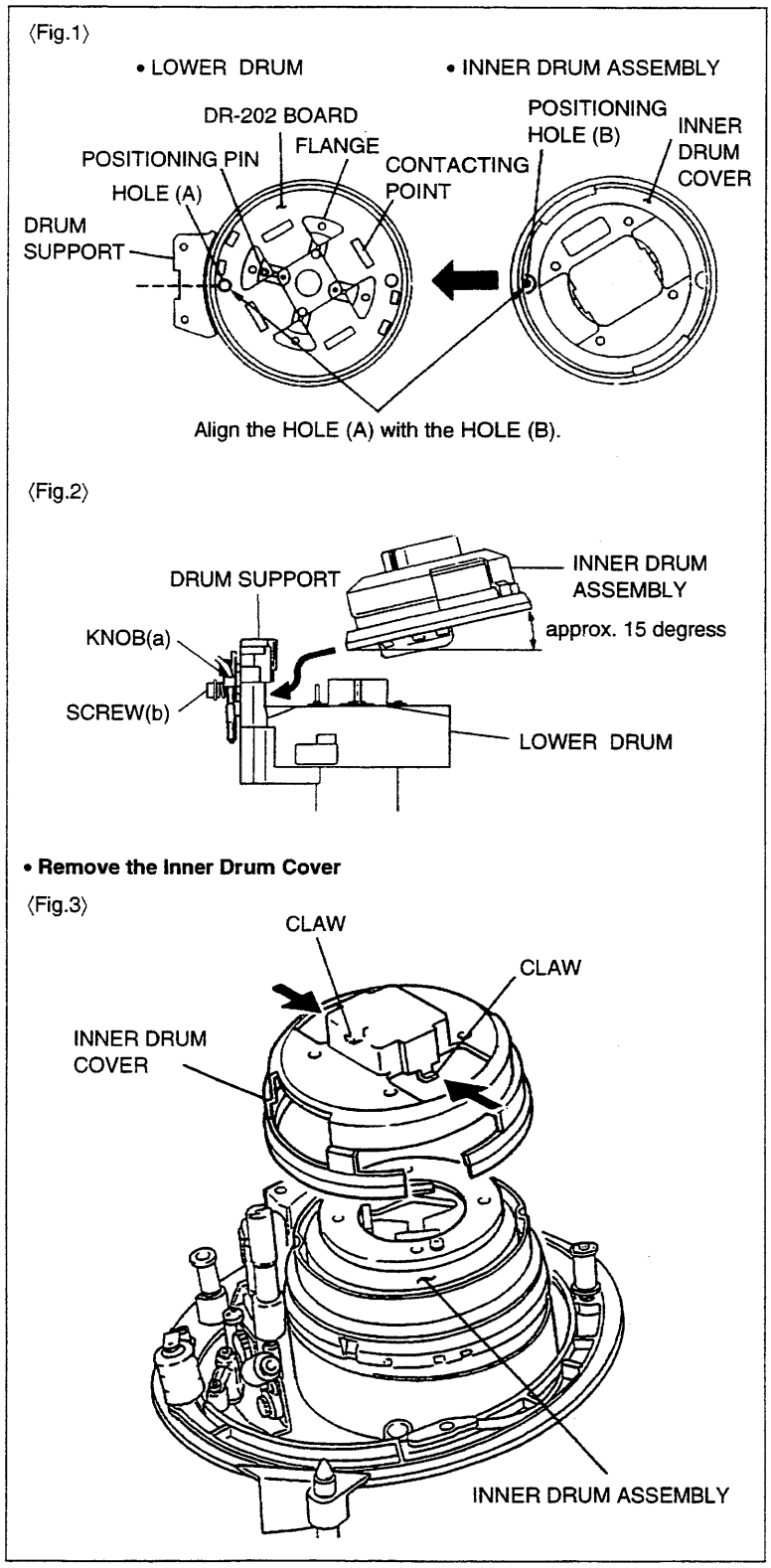

Install the Inner Drum Assembly

9. Install the Upper Drum Eccentricity Adjustment Tool

(1) Clean the measuring probe and the inner drum portion shown in the figure (the circumference) with a cleaning cloth moistened with cleaning fluid.

Caution

Do not make dirt adhere to the measuring probe during use. This may damage the inner drum.

(2) Install the eccentricity adjustment tool in the chassis shown in the figure.

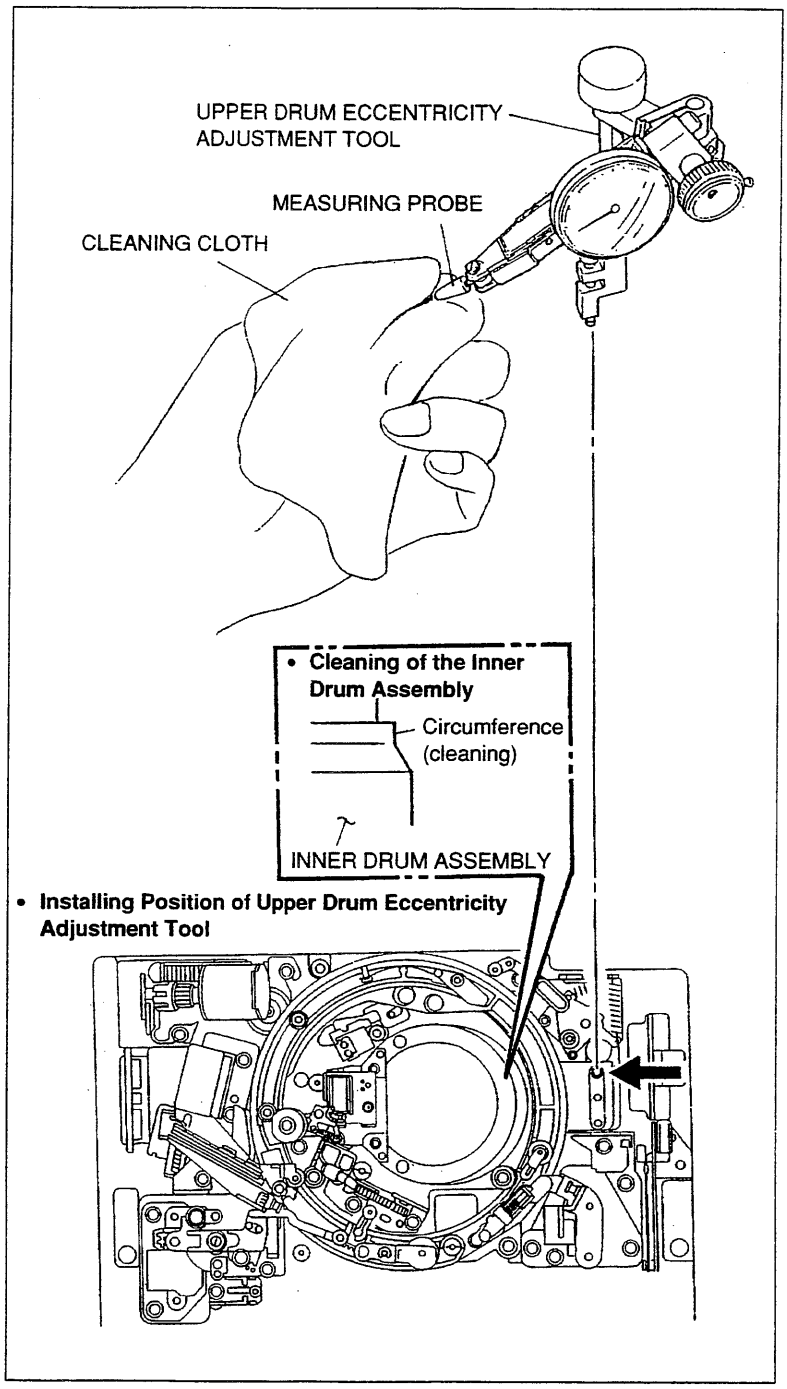

Install the Upper Drum Eccentricity Adjustment Tool

10. Adjust the Inner Drum Eccentricity

(1) Set the measuring probe of the tool to the inner drum portion shown in the figure.

Caution

Take care that the measuring probe does not touch the rotary heads.

(2) Rotate the inner drum slowly clockwise.

Note: The inner drum is rotated clockwise for measuring the eccentricity value. When the brush/slip ring is installed, do not rotate the inner drum clockwise.

Confirm that the pointer deviation of the gauge satisfies the specification in one complete turn of the inner drum.

If the specification is not satisfied, repeat steps ① to ③ below until it is satisfied.

① Rotate the inner drum slowly clockwise and stop the rotation in the position where the pointer deviation is minimum.
② Push the board cover in the position opposite to the measuring probe by 180 degrees toward the direction of the arrow so that the pointer deviation is 1/2 of the maximum value.
③ Confirm that the specification is satisfied.

Note: When the pointer does not move even if the board cover is pushed by finger, tighten the four screws fixing the inner drum a little loosely. When the pointer moves immediately, tighten the screws a little firmly.

(3) Tighten the four screws gradually in the order indicated in the board cover.

Tightening torque: 39.2×10^{-2} N•m (4 kgf•cm)

(4) Confirm that the pointer deviation of the gauge satisfies the specification.

If the specification is not satisfied, loosen the four screws once. Then perform steps ① to ③ above.

(5) Tighten the four screws gradually in the order indicated in the board cover.

Tightening torque: 78.4×10^{-2} N•m (8 kgf•cm)

(6) Confirm again that the pointer deviation of the gauge satisfies the specification.

11. Remove the Upper Drum Eccentricity Adjustment Tool

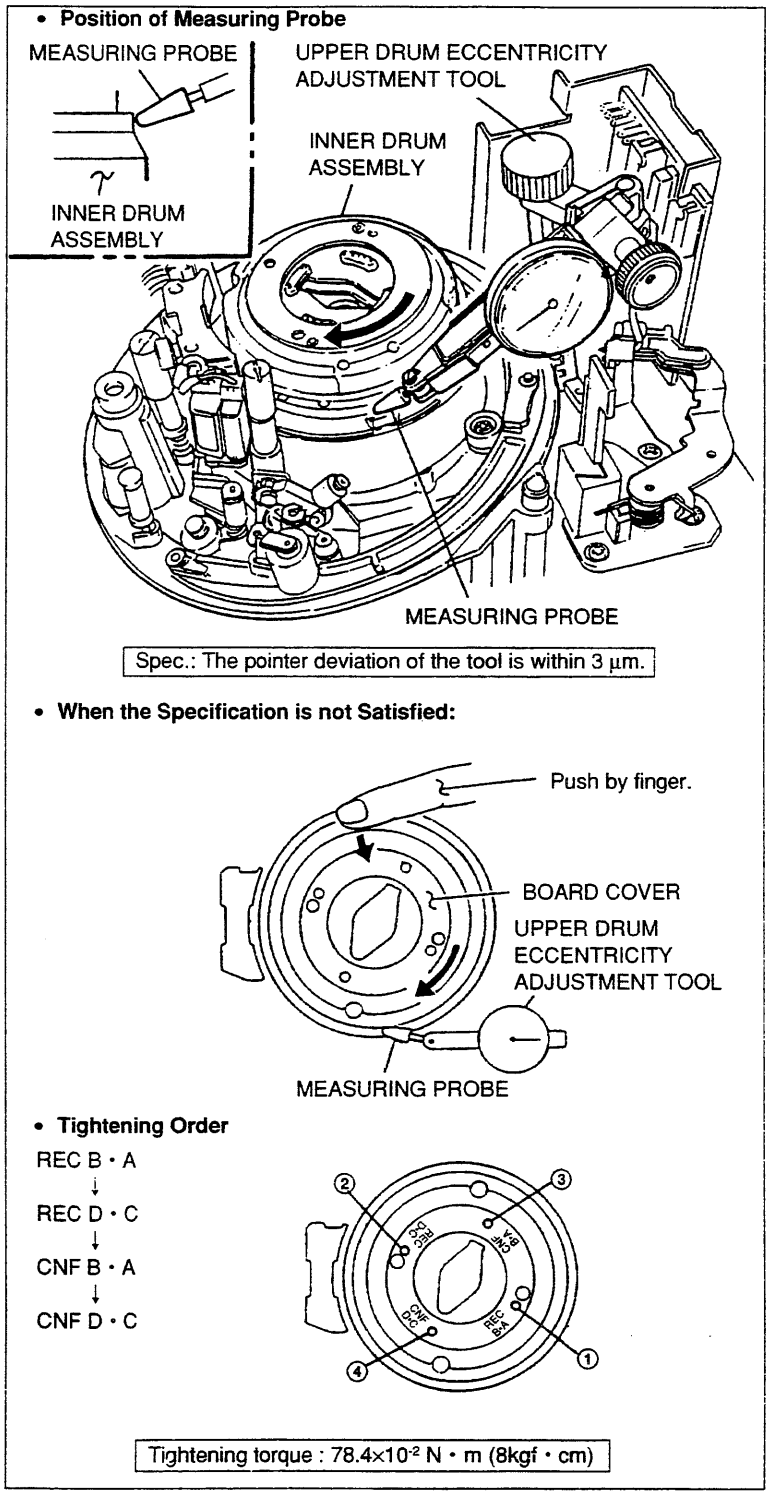

Adjust the Inner Drum Eccentricity

12. Cleaning

Clean the lower surface (shaded portion in the figure) of the height determining plate, the upper surface of the drum support (shaded portion in the figure), and the upper drum contacting surface with a cleaning cloth moistened with cleaning fluid.

Caution

After cleaning, wipe with a dry cleaning cloth.

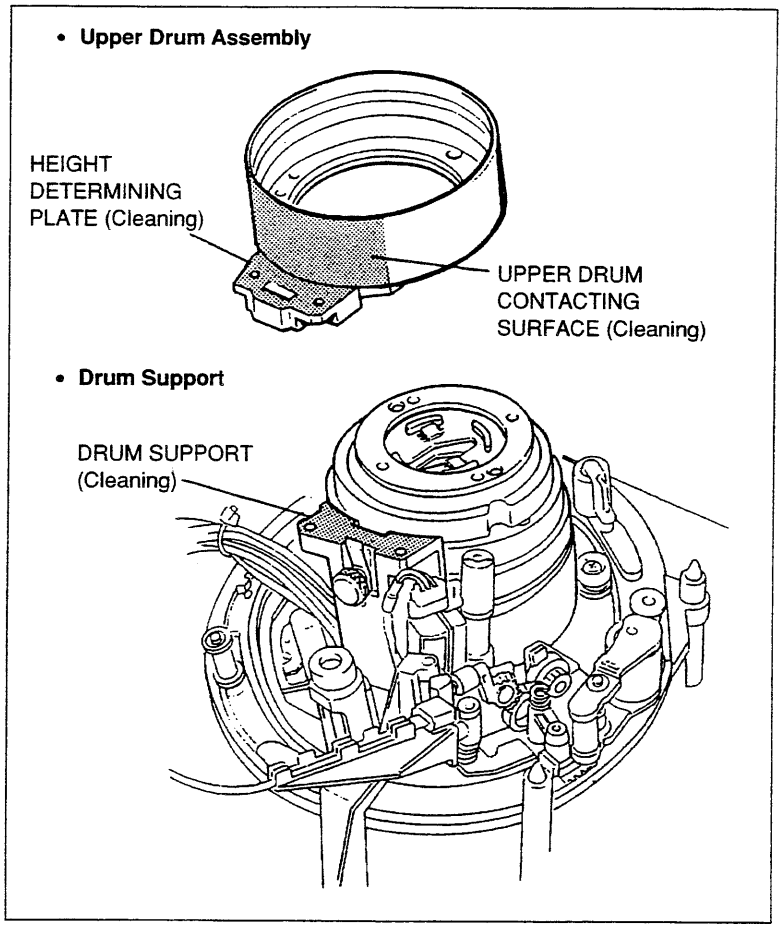

Cleaning

13. Install the Upper Drum Assembly

(1) Install the upper drum assembly slowly so that the leaf spring is put into the hole of the height determining plate.

Caution

Take care that the tape running surface and the contacting surface (shaded portion in the figure) of the upper drum does not strike against the drum support. Also, be careful not to damage the lower edge portion of the upper drum.

(2) Tighten the two screws each by three turns.
(3) Tighten the knob. At that time, confirm that the portion B of the upper drum assembly somewhat rises to the surface.
(4) Tighten the two screws alternately and gradually.

Tightening torque: 78.4×10^{-2} N•m (8 kgf•cm)

(5) Confirm that there is no clearance between the drum support and the upper drum assembly (A portion in the figure, both of left and right sides) as visual.

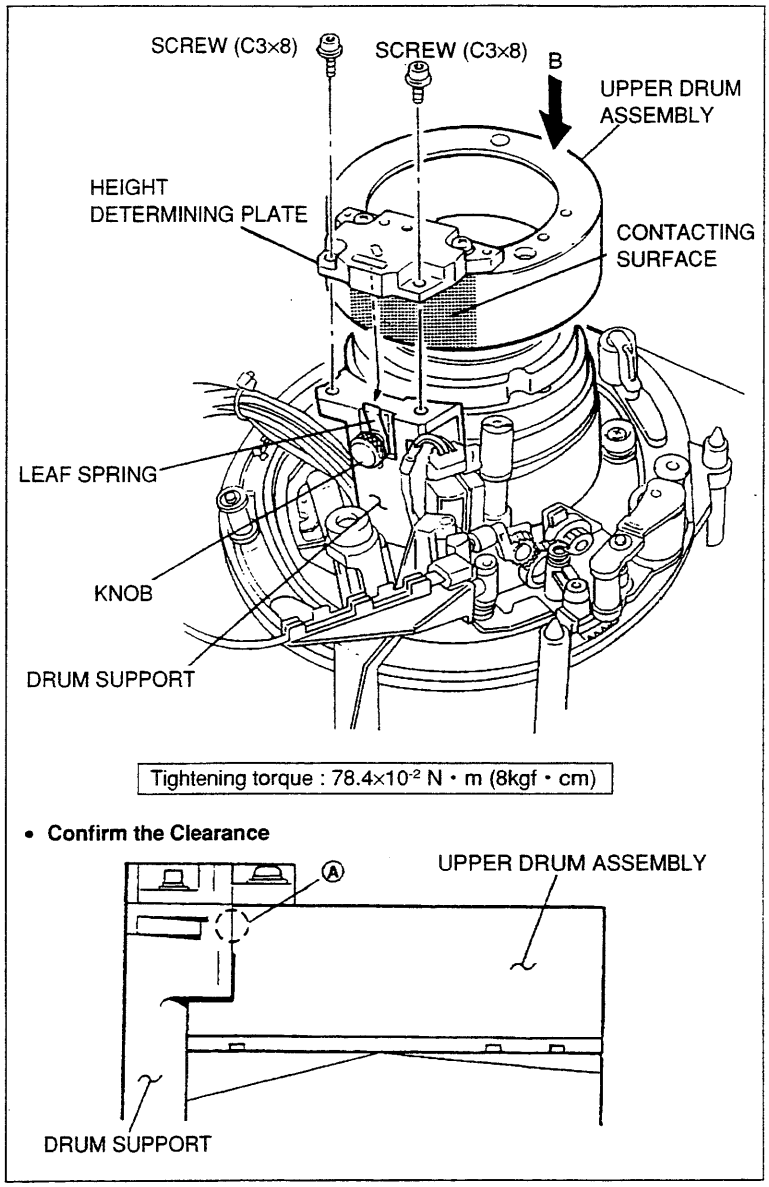

Install the Upper Drum Assembly

14. Cleaning

Wipe the brush/slip ring assembly mounting surface (shaded portion in the figure) and the DR-205 board contacting points with a dry cleaning cloth.

Caution

1. Do not apply cleaning fluid to the contacting points.
2. If the screws remain put into the screw holes of the brush/slip ring assembly, remove them once. When the brush/slip ring assembly is turned upside down, these screws may be dropped into the slip ring cover.

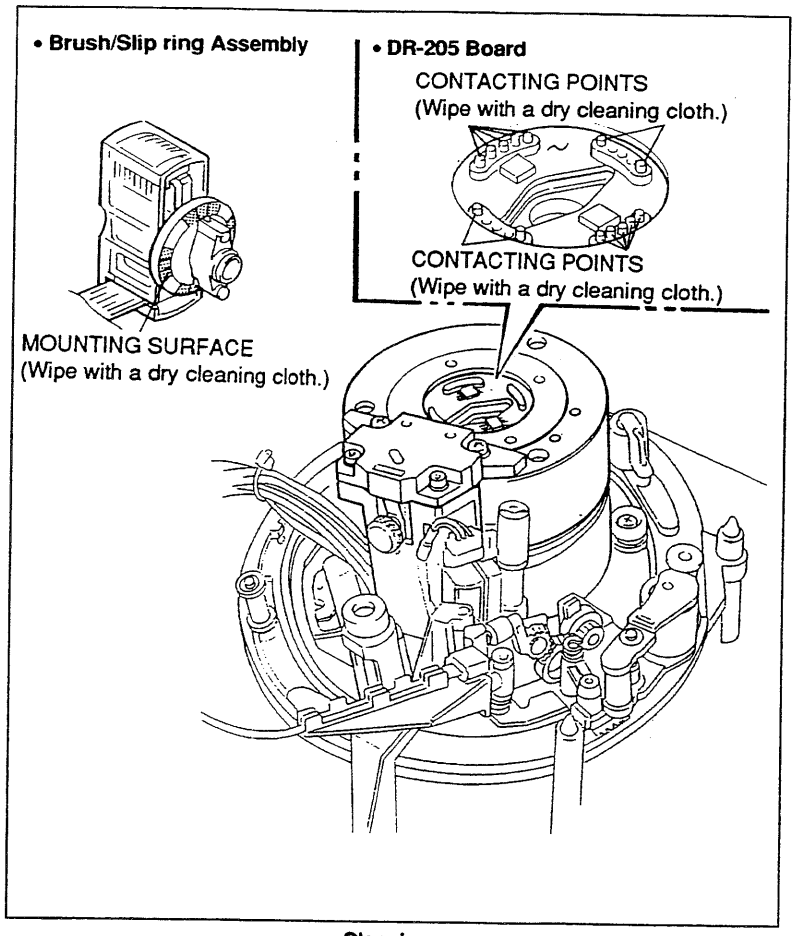

Cleaning

15. Install the Brush/Slip Ring Assembly

(1) Install the brush/slip ring assembly in the direction shown in the figure.

(2) Tighten the two screws alternately and gradually while pushing both sides of the flange equally from above.

Tightening torque: 14.7×10^{-2} N•m (1.5 kgf•cm)

Caution

Never apply excessive force to the cover.

16. Connect the Flexible Board

Connect the flexible board into connector CN241 on the HN-185 board.

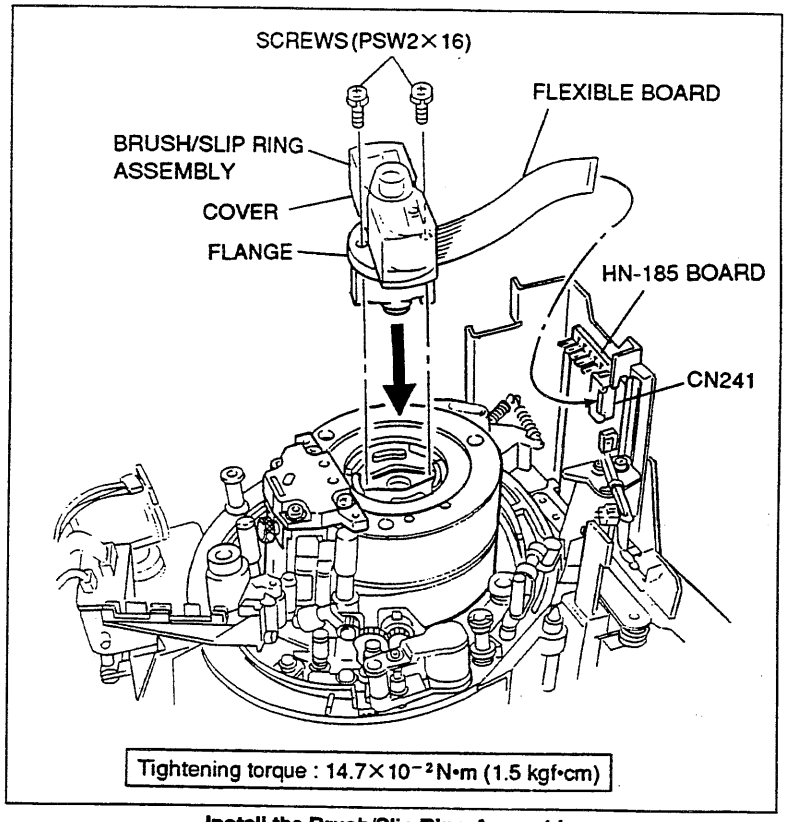

Install the Brush/Slip Ring Assembly

17. Cleaning

Clean the portion below.

(1) Rotary heads (Refer to Section 7-1-2.)

(2) Upper drum's tape running surface (Refer to Section 7-1-3.)

Caution

After cleaning, wipe with a dry cleaning cloth.

18. Install the Upper Drum Cover

(1) Tighten the two screws while pushing the upper drum cover in the direction of the drum support.

Tightening torque: 14.7×10^{-2} N•m (1.5 kgf•cm)

(2) Confirm that the rubber of the upper drum cover does not turn over.

(3) Confirm that the no clearance between the upper drum cover and the upper drum.

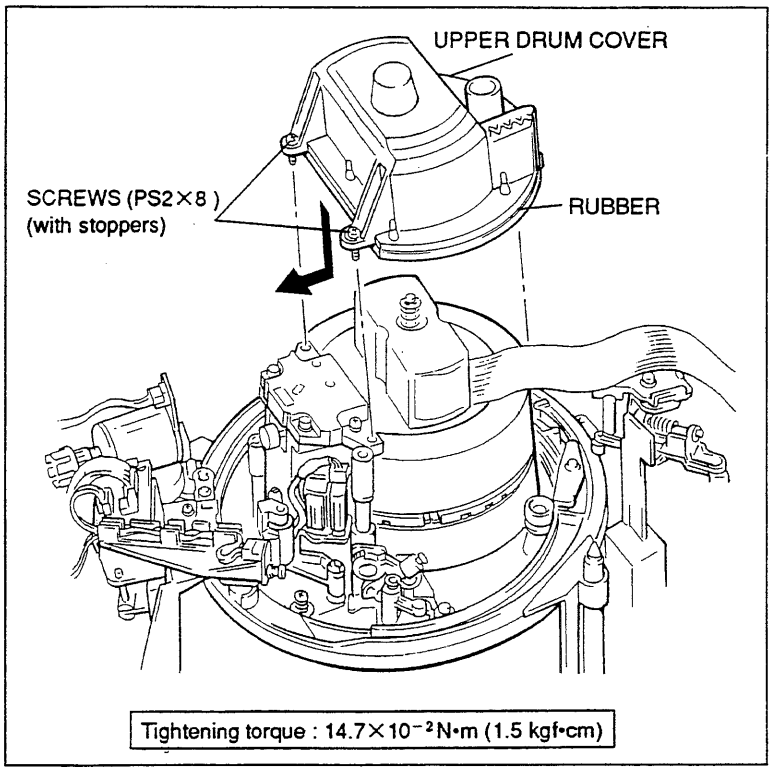

Install the Upper Drum Cover

19. Install the Rotary Head Cleaner Assembly

(1) Insert the cleaning roller from the clearance between the drum support and full erase head as shown in the figure.
(2) Align the two pins of the rotary head cleaner assembly with the two holes of the drum support.
(3) Tighten the screw while moving the rotary head cleaner assembly in the direction indicated by the arrow A.
(4) Fix the harness to the sensor holder position shown in the figure.
(5) Connect a connector into connector CN232 on the HN-184 board.
(6) Bind the full erase head harness and the rotary head cleaner harness with the harness clamper (or the equivalent).

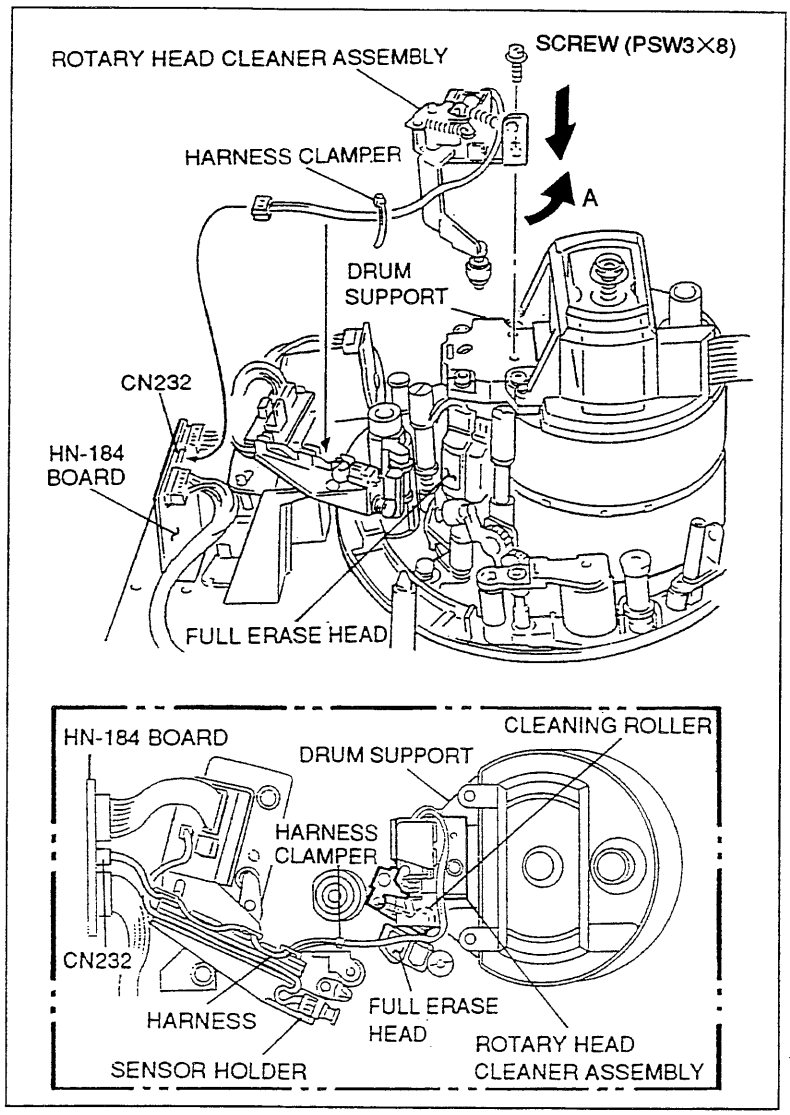

Install the Rotary Head Cleaner Assembly

8-2-1. Inner Drum Assembly Replacement

Adjustment after Replacement

20. Confirm the Tape Running
Refer to Section 8-4-2.

21. Confirm the Video Tracking
Refer to Section 8-4-3.

22. Confirm the CTL Head Height
Refer to Section 8-4-4.

23. Adjust the CTL Head Position
Refer to Section 8-4-5.

24. Confirm the Audio/TC Head Height
Refer to Section 8-4-6.

25. Adjust the Audio/TC Head Position
Refer to Section 8-4-9.

26. Perform the Servo/DT and RF Adjustment
Refer to Section 8-5.

27. Perform the Adjustment after Drum Replacement
Refer to Section 8-6.

8-23

8-2-2. Brush/Slip Ring Assembly Replacement

Outline

Replacement
1. Remove the Upper Drum Cover
2. Disconnect the Flexible Board (CN241/HN-185 Board)
3. Remove the Brush/Slip Ring Assembly
4. Cleaning (DR-205 Board's Contacting Points and Brush/Slip Ring Assembly Mounting Surface)
5. Install the Brush/Slip Ring Assembly
6. Connect the Flexible Board (CN241/HN-185 Board)
7. Install the Upper Drum Cover
Adjustment after Replacement
8. Perform the Servo/DT Check (Refer to Section 5-2.) (C05: DIGITAL DT CHECK, C06: ANALOG DT CHECK)
9. Perform the RF Check (Refer to Section 5-3.) (C1: RF CHECK)

Note

When the brush or slip ring was worn or damaged, replace the brush/slip ring assembly.
It cannot be replaced only brush or slip ring.

Tools

- Torque screwdriver (6 kg•cm) (JB-5251): J-6252-510-A
- Torque screwdriver's bit (+2 mm, l=75 mm): J-6323-420-A

- Cleaning cloth: 3-184-527-01
- Cleaning fluid: 9-919-573-01

Removal

1. **Remove the Upper Drum Cover**
   Loosen the two screws and remove the upper drum cover.

   Note: These screws cannot be removed because of stoppers.

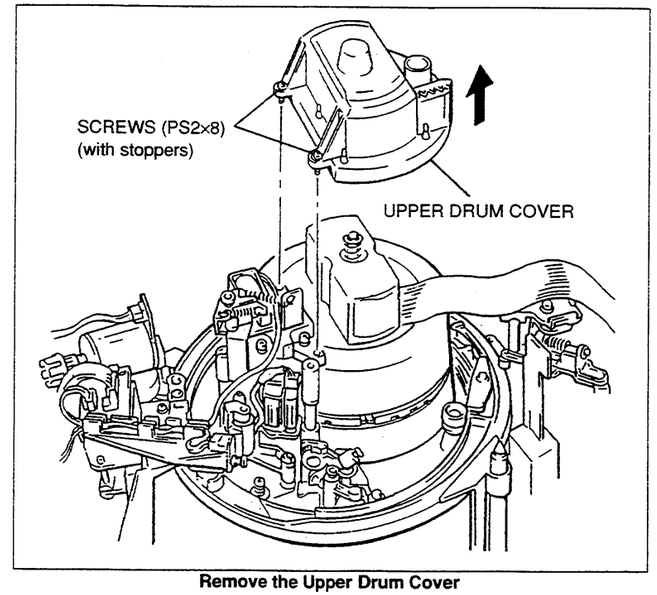

Remove the Upper Drum Cover

2. **Disconnect the Flexible Board**
   Disconnect the flexible board from connector CN241 on the HN-185 board.

3. **Remove the Brush/Slip Ring Assembly**
   (1) Remove the two screws, then remove the brush/slip ring assembly.

   Caution
   Do not apply excessive force to the brush/slip ring assembly at that time.

   (2) Turn the brush/slip ring assembly upside down, and take out the two screws.

   Caution
   Be careful not to drop the screw into the cover.

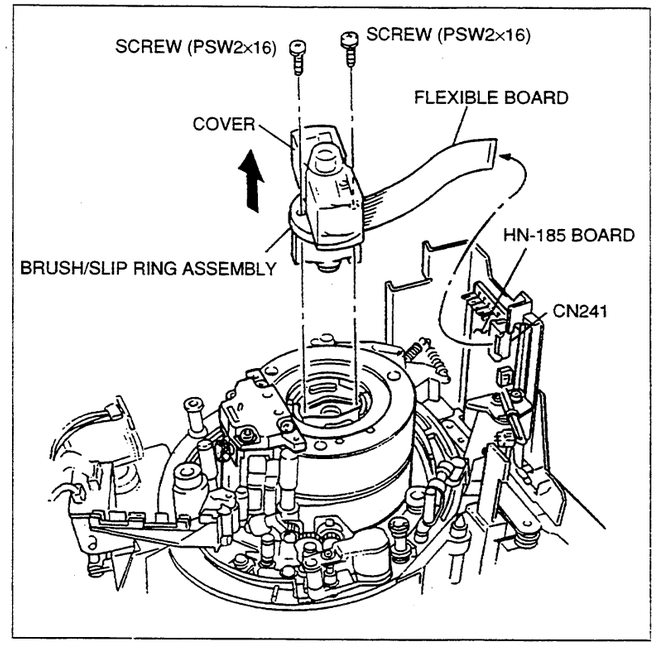

Remove the Brush/Slip Ring Assembly

Installation

4. **Cleaning**
   Wipe the brush/slip ring assembly mounting surface (shaded portion in the figure) and the DR-205 board contacting points with a dry cleaning cloth.

   Caution
   Do not apply cleaning fluid to the contacting points.

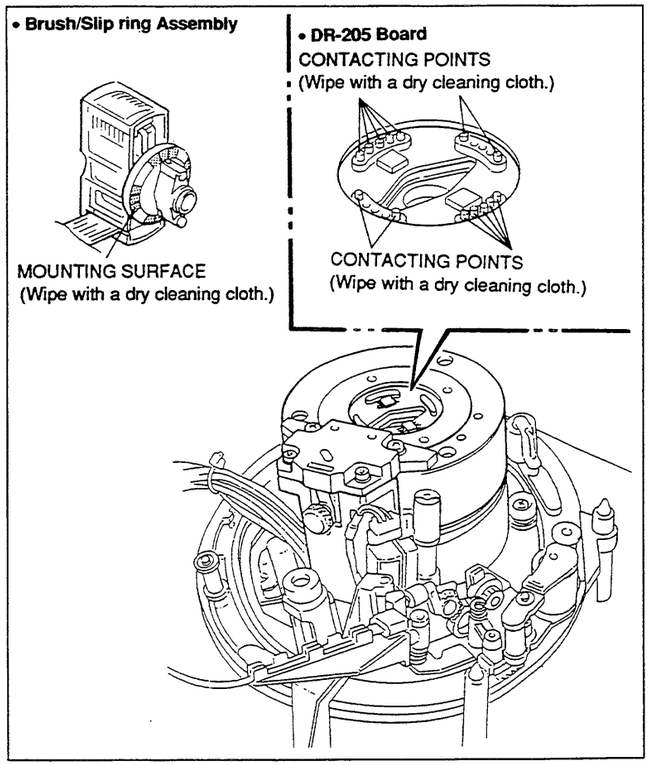

Cleaning

5. **Install the Brush/Slip Ring Assembly**
   (1) Insert the two screws taken out in (2) of step 3 into the screw holes of the brush/slip ring assembly.
   (2) Install the brush/slip ring assembly in the direction shown in the figure.
   (3) Tighten the two screws alternately and gradually while pushing both sides of the flange equally from above.

   Tightening torque: 14.7×10^{-2} N•m (1.5 kgf•cm)

   Caution
   Never apply excessive force to the cover.

6. **Connect the Flexible Board**
   Connect the flexible board into connector CN241 on the HN-185 board.

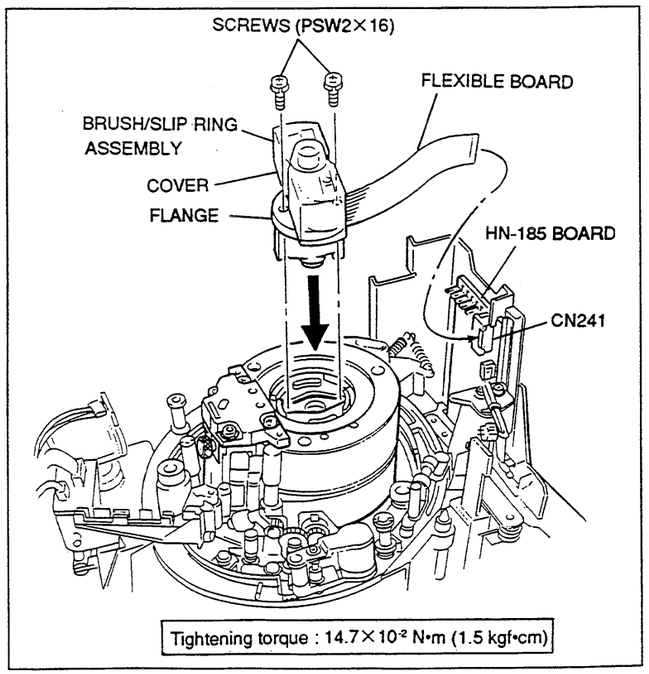

Install the Brush/Slip Ring Assembly

7. **Install the Upper Drum Cover**
   (1) Tighten the two screws while pushing the upper drum cover in the direction of the drum support.

   Tightening torque: 14.7×10^{-2} N•m (1.5 kgf•cm)

   (2) Confirm that the rubber of the upper drum cover does not turn over.
   (3) Confirm that the no clearance between the upper drum cover and the upper drum.

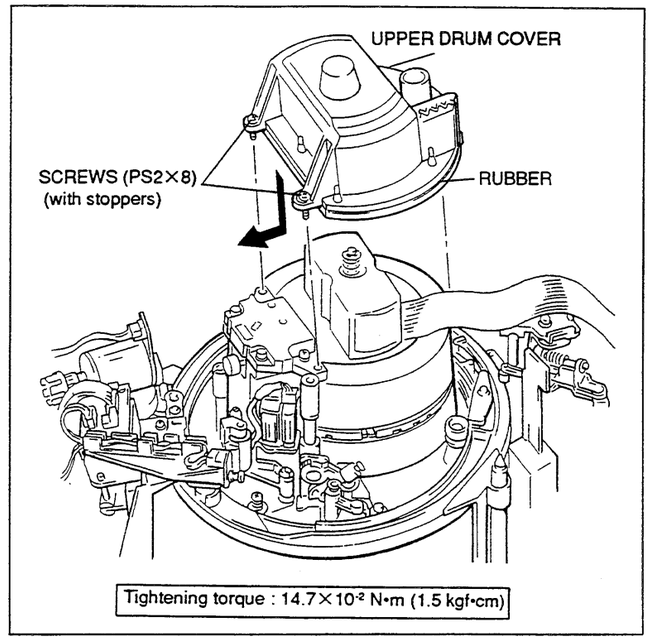

Install the Upper Drum Cover

Adjustment after Replacement

8. **Perform the Servo/DT Check**
   Refer to Section 5-2.
   (C05: DIGITAL DT CHECK,
   C06: ANALOG DT CHECK)

9. **Perform the RF Check**
   Refer to Section 5-2.
   (C1: RF CHECK)

8-2-3. Drum Assembly Replacement

Outline

Replacement
1. Remove the Rotary Head Cleaner Assembly
2. Remove the Upper Drum Cover
3. Disconnect the Flexible Board (CN241/NH-185 Board)
4. Remove the Drum Assembly
5. Cleaning (Drum Assembly Mounting Surfaces and Chassis Mounting Surfaces)
6. Install the Drum Assembly
7. Connect the Flexible Board (CN241/HN-185 Board)
8. Cleaning (Rotary Heads, Upper Drum's Tape Running Surface, and Lower Drum's Tape Running Surface)
9. Install the Upper Drum Cover
10. Install the Rotary Head Cleaner Assembly
Adjustment after Replacement
11. Confirm the Drum Motor Operation (Refer to Section 5-2.) (C015 : DRUM MOTOR)
12. Adjust the Tape Running (Refer to Section 8-4-2.)
13. Adjust the Video Tracking (Refer to Section 8-4-3.)
14. Adjust the CTL Head Height (Refer to Section 8-4-4.)
15. Adjust the CTL Head Position (Refer to Section 8-4-5.)
16. Adjust the Audio/TC Head Height (Refer to Section 8-4-6.)
17. Adjust the Audio/TC Head Azimuth (Refer to Section 8-4-7.)
18. Confirm the Audio/TC Head Head-to-Tape Contact (Refer to Section 8-4-8.)
19. Adjust the Audio/TC Head Position (Refer to Section 8-4-9.)
20. Confirm the Audio Level in REV Mode (Refer to Section 8-4-10.)
21. Confirm the Tape Running (Refer to Section 8-4-2.)
22. Perfrom the Servo/DT and RF Adjustment (Refer to Section 8-5.)
23. Perfrom the Adjustment after Drum Replacement (Refer to Section 8-6.)

Note

Be careful not to damage the audio/TC head and peripheral tape guides when removing or installing the drum assembly.

Basic knowledge

For except the periodic replacement time, replace the drum assembly in the following cases.

- The upper or lower drum's tape running surface is damaged and cannot be repaired.
- A correct RF signal waveform cannot be obtained due to the worn upper or lower drum even if the tracking adjustment is performed.
- The VTR performance deteriorates because of the noise or jitter caused by the bearing life.

Tools

- Hexagonal wrench driver (2.5 mm): 7-700-766-04
- Torque screwdriver (6 kg•cm)(JB-5251): J-6252-510-A
- Torque screwdriver (12 kg•cm)(JB-5252): J-6252-520-A
- Torque screwdriver's hexagonal bit (d=2.5 mm, l=120 mm): J-6251-090-A

- Cleaning cloth: 3-184-527-01
- Cleaning fluid: 9-919-573-01

8-2-3. Drum Assembly Replacement

Removal

1. **Remove the Rotary Head Cleaner Assembly**
   (1) Disconnect the connector from connector CN232 on the HN-184 board.
   (2) Cut the harness clamper.
   (3) Remove the harness from the sensor holder.
   (4) Remove the screw, shift the rotary head cleaner assembly in the direction indicated by the arrow A, and remove it from the drum support.

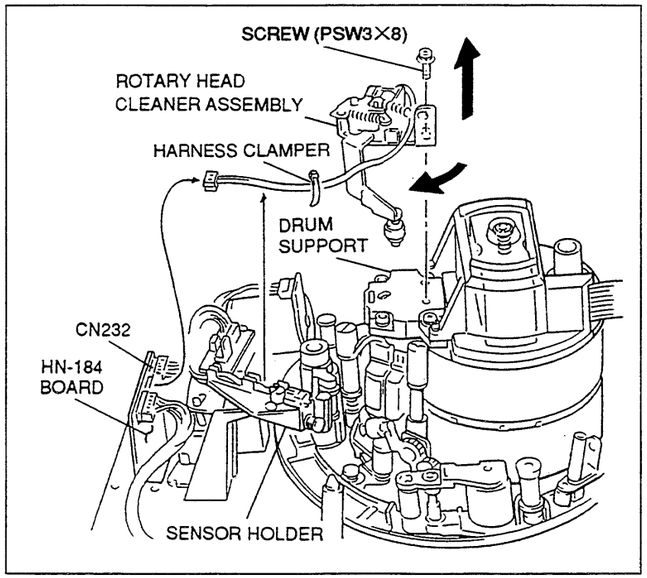

Remove the Rotary Head Cleaner Assembly

2. **Remove the Upper Drum Cover**
   Loosen the two screws and remove the upper drum cover.

   Note: These screws cannot be removed because of stoppers.

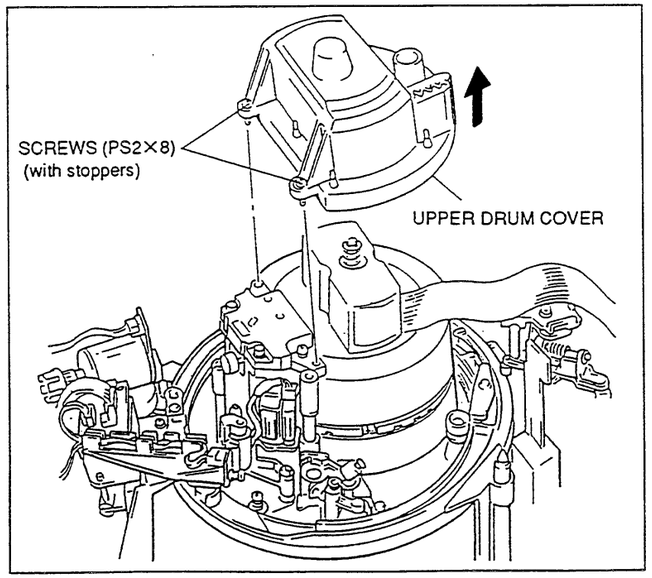

Remove the Upper Drum Cover

3. Disconnect the Flexible Board

Disconnect the flexible board from connector CN241 on the HN-185 board.

4. Remove the Drum Assembly

(1) Disconnect the connector on the harness rail.

Caution

Only the unit applied to the following serial number:

- DVW-A500P (EK): S/N 12036 and higher
- DVW-A510P (EK): S/N 10721 and higher
- DVW-CA510P (EK): S/N 10051 and higher
- DVW-A500 (UC): S/N 11288 and higher
- DVW-A510 (UC): S/N 10257 and higher
- DVW-CA510 (UC): S/N 10010 and higher

(2) Rotate the inner drum assembly manually counterclockwise and align mark "⇨" indicated on the board cover with the screw hole of the upper drum assembly.

Note: The drum assembly is fixed to the chassis with the three fixing screws (C3×8) in the screw hole. The screw hole of the upper drum assembly coincides with the fixing screw position by aligning it with mark "⇨" on the board cover.

(3) Loosen the screw fully using a hexagonal wrench driver.

Note: These screws cannot be removed because of stoppers.

(4) Loosen other two screws fully in the same way as in steps (2) and (3).

• When removing the connector of the demagnetization head assembly (Only DVW-A500P/A510P/CA510P/A500/A510/CA510)

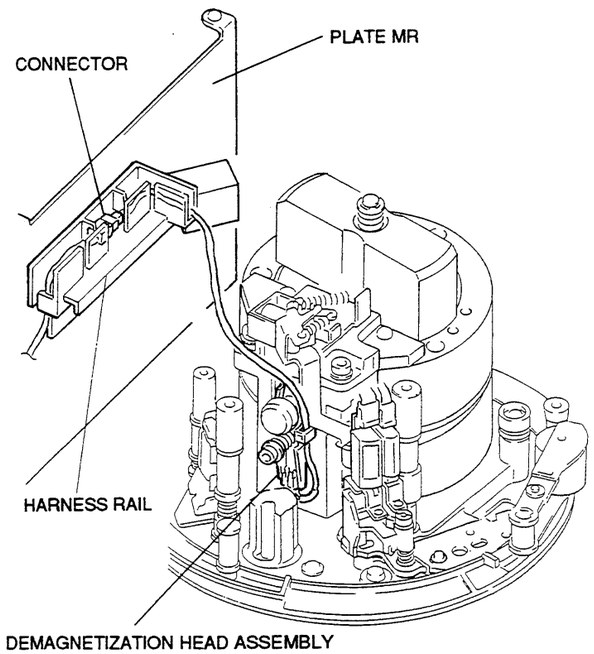

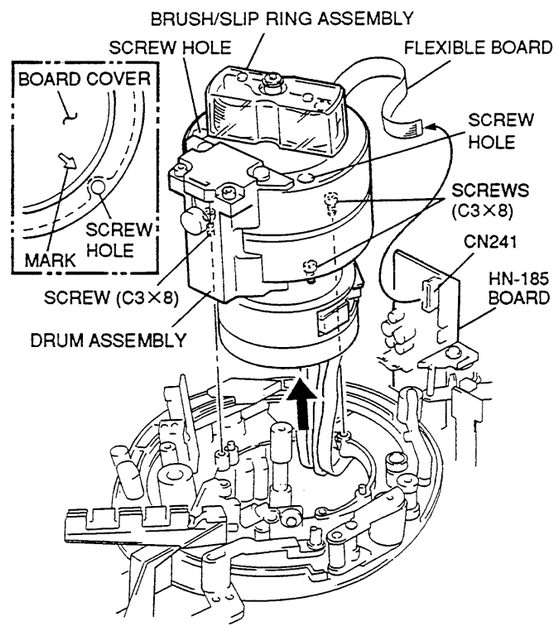

(5) Raise the drum assembly just above and remove the harness from the harness holder at the bottom.

Caution

Be careful not to raise the drum assembly by holding the brush/slip ring assembly.

(6) Disconnect three connectors CN602, CN610, and CN612 in the state of step (5). The drum assembly can then be removed.

Caution

Be careful not to touch the audio/TC head and peripheral tape guides when removing the drum assembly.

(7) Loosen the hexagonal screw, then remove the demagnetization head assembly from the drum assembly.

Caution

Only the unit applied to the following serial number:

- DVW-A500P (EK): S/N 12036 and higher
- DVW-A510P (EK): S/N 10721 and higher
- DVW-CA510P (EK): S/N 10051 and higher
- DVW-A500 (UC): S/N 11288 and higher
- DVW-A510 (UC): S/N 10257 and higher
- DVW-CA510 (UC): S/N 10010 and higher

• Disconnect the Connectors

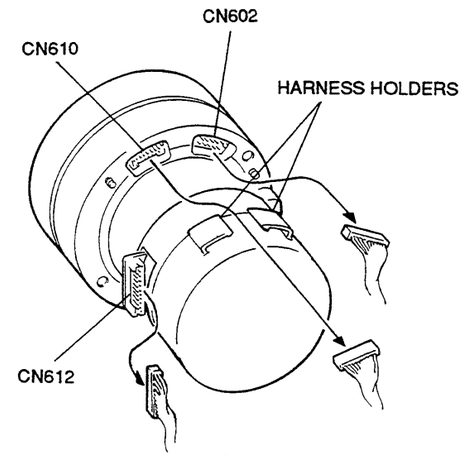

• When removing the demagnetization head assembly (Only DVW-A500P/A510P/CA510P/A500/A510/CA510)

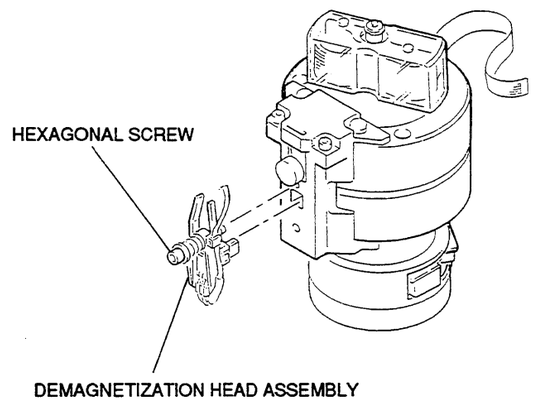

Remove the Drum Assembly

8-2-3. Drum Assembly Replacement

Installation

5. **Cleaning**
   Clean the new drum assembly mounting surfaces and chassis mounting surfaces with a cleaning cloth moistened with cleaning fluid.

   Caution
   After cleaning, wipe with a dry cleaning cloth.

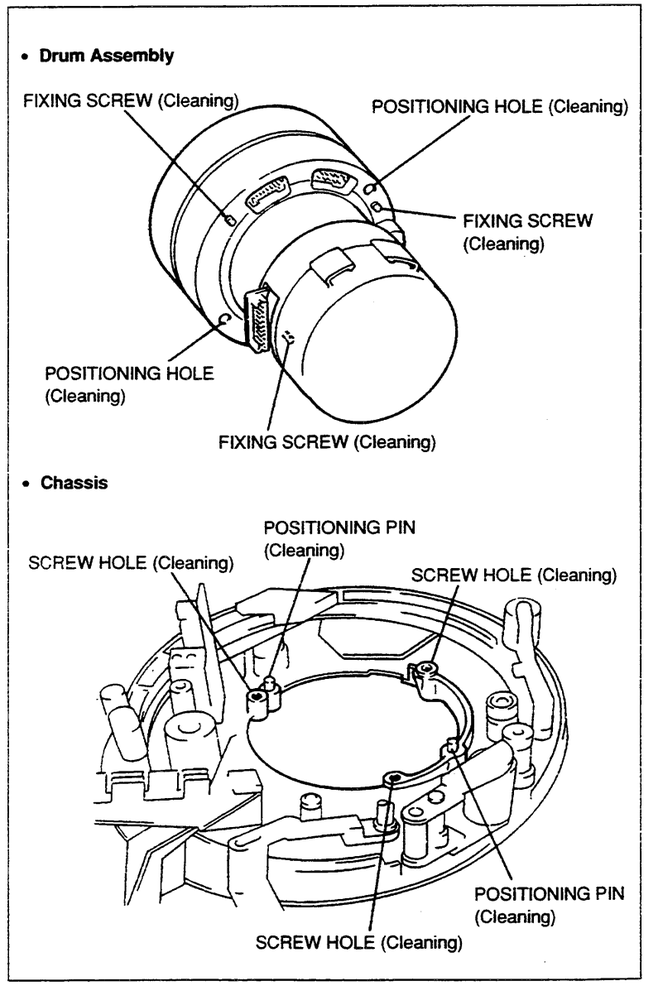

Cleaning

8-29

6. Install the Drum Assembly

(1) Confirm that there is no clearance between the spacer and the washer. (If clearance exists, tighten the hexagonal screw and the spacer.)
Then insert the demagnetization head into the hole of the drum support, and tighten the hexagonal screw.

Tightening torque: 39.2×10 N•m
(4 kgf•cm)

Caution
Only the unit applied to the following serial number:
- DVW-A500P (EK): S/N 12036 and higher
- DVW-A510P (EK): S/N 10721 and higher
- DVW-CA510P (EK): S/N 10051 and higher
- DVW-A500 (UC): S/N 11288 and higher
- DVW-A510 (UC): S/N 10257 and higher
- DVW-CA510 (UC): S/N 10010 and higher

(2) Hold the drum assembly as shown in the figure and connect the three connectors disconnected in (6) of step 4.

Caution
1. Hold the height determining plate and the drum support at that time. Be careful not to hold the upper drum and the brush/slip ring assembly.
2. Pay attention to the direction of the connectors.

(3) Fix the harness by a harness holder as shown in the figure.

• When installing the demagnetization head assembly (Only DVW-A500P/A510P/CA510P/A500/A510/CA510)

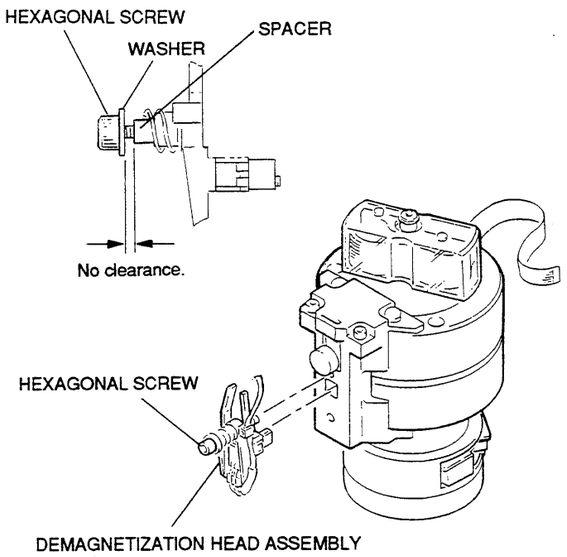

Tightening torque : 39.2×10⁻² N·m(4kgf·cm)

• When connecting the Connectors | **• How to fix the Harness**

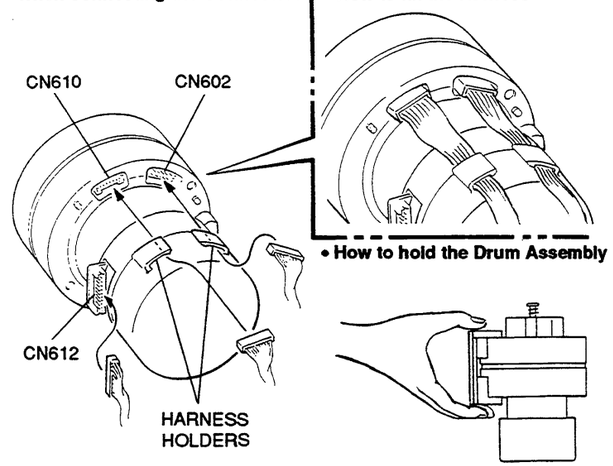

8-2-3. Drum Assembly Replacement

(4) Align the two positioning holes of the drum assembly with the two positioning pin of the chassis while passing the harness under the chassis.

Caution
1. Be careful not to touch the audio/TC head and tape guide at that time.
2. Be careful not to put the harness between the lower drum and the chassis.

(5) Confirm that the drum assembly is firmly inserted into the positioning pins.
(6) Rotate the inner drum assembly manually counterclockwise and align the upper drum assembly holes with the fixing screw positions.
(7) Tighten the screw tentatively.
(8) Tighten other two screws tentatively in the same way as in steps (6) and (7).
(9) Tighten the three screws each by two or three turns in the order of counterclockwise.

Tightening torque: 78.4×10⁻² N•m
(8 kgf•cm)

(10) Connect the connector of the demagnetization head assembly into the connector on the harness rail.

Caution
Only the unit applied to the following serial number:
- DVW-A500P (EK): S/N 12036 and higher
- DVW-A510P (EK): S/N 10721 and higher
- DVW-CA510P (EK): S/N 10051 and higher
- DVW-A500 (UC): S/N 11288 and higher
- DVW-A510 (UC): S/N 10257 and higher
- DVW-CA510 (UC): S/N 10010 and higher

7. Connect the Flexible Board
Connect the flexible board into connector CN241 on the HN-185 board, then lock.

8. Cleaning
Clean the portion below.
(1) Rotary heads (Refer to Section 7-1-2.)
(2) Upper drum's tape running surface (Refer to Section 7-1-3.)
(3) Lower drum's tape running surface (Refer to Section 7-1-4.)

Caution
After cleaning, wipe with a dry cleaning cloth.

• When installing the Drum Assembly on the Chassis

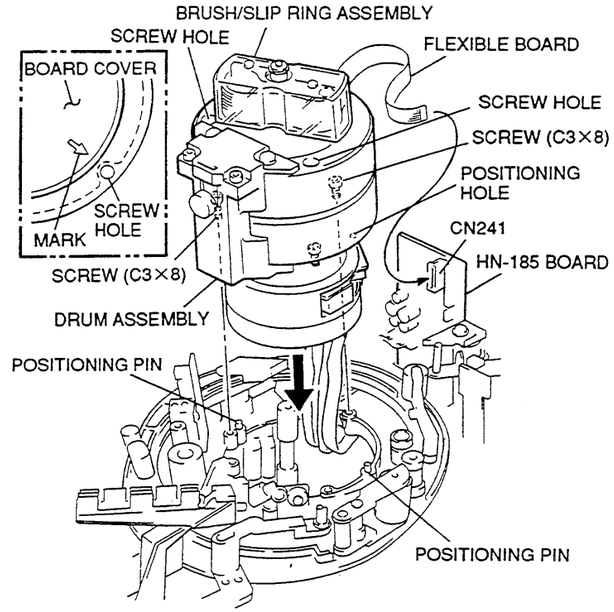

Tightening torque : 78.4×10⁻² N•m (8 kgf•cm)

• When installing the connector of the demagnetization head assembly (Only DVW-A500P/A510P/CA510P/A500/A510/CA510)

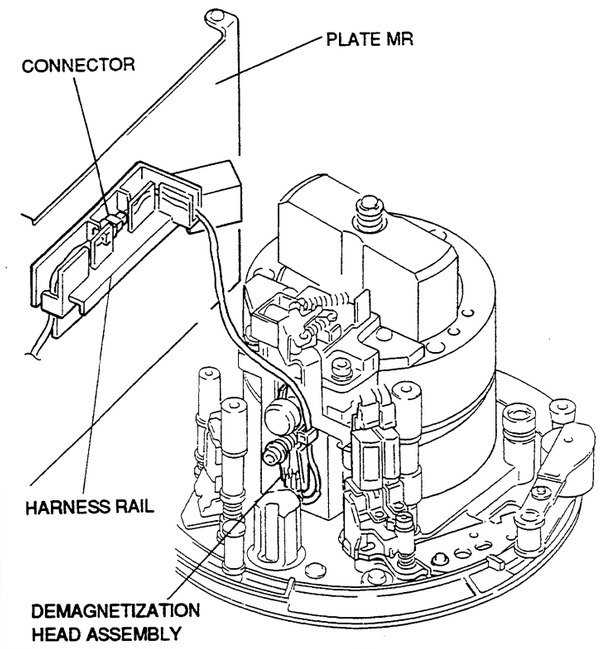

Install the Drum Assembly

9. Install the Upper Drum Cover

(1) Tighten the two screws while pushing the upper drum cover in the direction of the drum support.

Tightening torque: 14.7×10^{-2} N•m (1.5 kgf•cm)

(2) Confirm that the rubber of the upper drum cover does not turn over.

(3) Confirm that the no clearance between the upper drum cover and the upper drum.

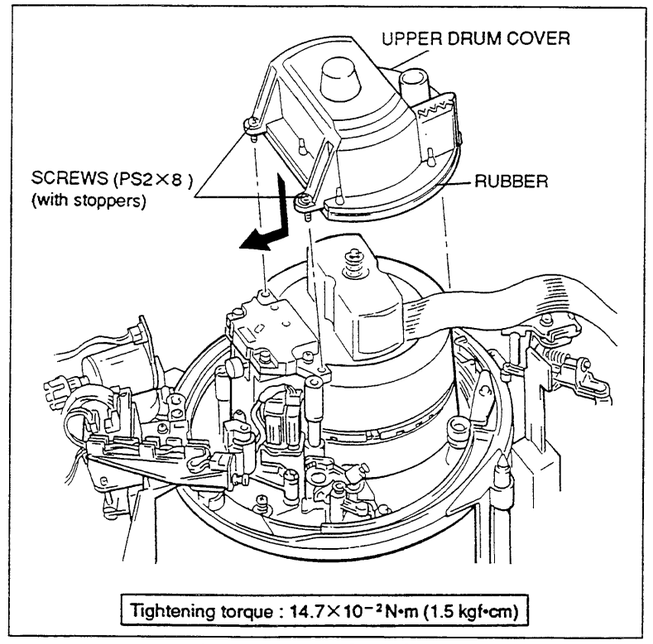

Install the Upper Drum Cover

8-2-3. Drum Assembly Replacement

10. Install the Rotary Head Cleaner Assembly

(1) Insert the cleaning roller from the clearance between the drum support and full erase head as shown in the figure.

(2) Align the two pins of the rotary head cleaner assembly with the two holes of the drum support.

(3) Tighten the screw while moving the rotary head cleaner assembly in the direction indicated by the arrow A.

(4) Fix the harness to the sensor holder position shown in the figure.

(5) Connect the connector into connector CN232 on the HN-184 board.

(6) Bind the full erase head harness and the rotary head cleaner harness with the harness clamper (or the equivalent).

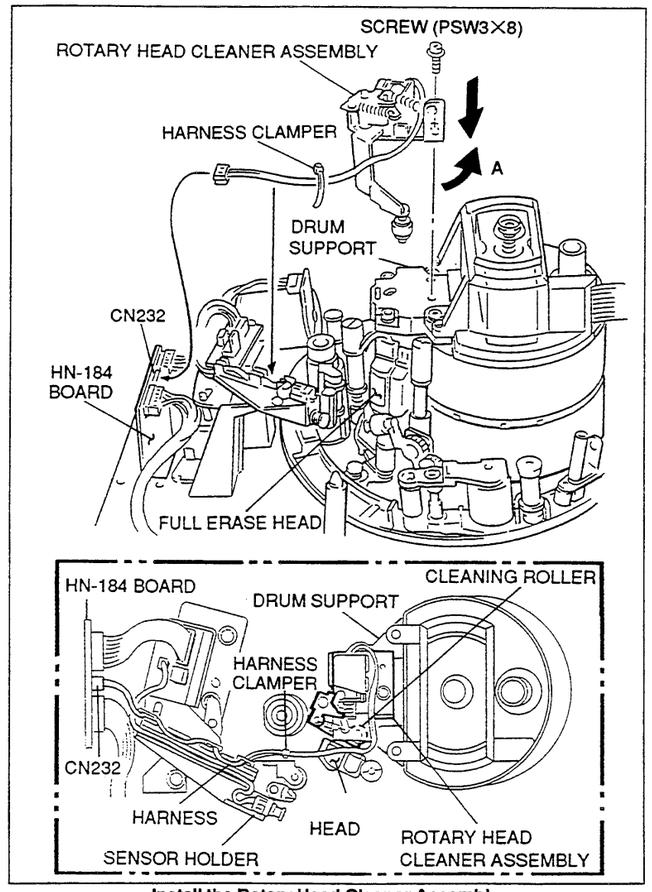

Install the Rotary Head Cleaner Assembly

Adjustment after Replacement

11. Confirm the Drum Motor Operation
Refer to Section 5-2. (C015 : DRUM MOTOR)

12. Adjust the Tape Running
Refer to Section 8-4-2.

13. Adjust the Video Tracking
Refer to Section 8-4-3.

14. Adjust the CTL Head Height
Refer to Section 8-4-4.

15. Adjust the CTL Head Position
Refer to Section 8-4-5.

16. Adjust the Audio/TC Head Height
Refer to Section 8-4-6.

17. Adjust the Audio/TC Head Azimuth
Refer to Section 8-4-7.

18. Confirm the Audio/TC Head Head-to-Tape Contact
Refer to Section 8-4-8.

19. Adjust the Audio/TC Head Position
Refer to Section 8-4-9.

20. Confirm the Audio Level in REV Mode
Refer to Section 8-4-10.

21. Confirm the Tape Running
Refer to Section 8-4-2.

22. Perfrom the Servo/DT and RF Adjustment
Refer to Section 8-5.

23. Perform the Adjustment after Drum Replacement
Refer to Section 8-6.

8-2-4. Cleaning Roller and Rotary Head Cleaner Assembly Replacement

Outline

Replacement
1. Remove the Harness (CN232/HN-184 Board)
2. Remove the Rotary Head Cleaner Assembly
3. Replace the Cleaning Roller
4. Install the Rotary Head Cleaner Assembly
5. Adjust the Cleaning Roller Position
6. Install the Harness (CN232/HN-184 Board)
Adjustment after Replacement
7. Confirm the Cleaning Solenoid Operation (Refer to Section 5-2.) (C023: CLEANING ROLLER)

Note

When the cleaning roller is replaced, it is recommended to replace the CR spacer at the same time.

- CR spacer : 3-182-765-02

Removal

1. **Remove the Harness**
   (1) Disconnect the connector from connector CN232 on the HN-184 board.
   (2) Cut the harness clamper.
   (3) Remove the harness from the sensor holder.

2. **Remove the Rotary Head Cleaner Assembly**
   Remove the screw, shift the rotary head cleaner assembly in the direction indicated by the arrow A, and remove it from the drum support.

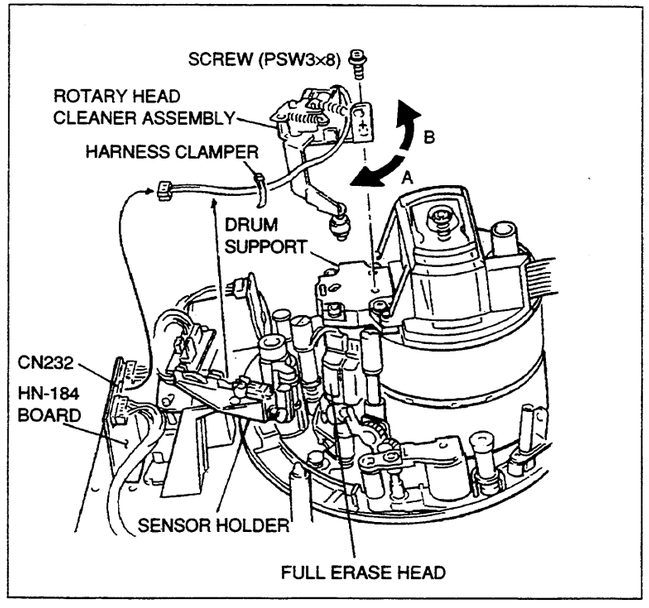

Remove/Install the Rotary Head Cleaner Assembly

3. **Replace the Cleaning Roller**
   (1) Remove the CR spacer, and remove the cleaning roller.
   (2) Pass a new cleaning roller through the shaft as shown in the figure. Then fix the cleaning roller by the CR spacer.
   (3) Move the cleaning roller in the vertical direction.
   At this time, confirm that there is no vertical play.

Installation

4. **Install the Rotary Head Cleaner Assembly**
   (1) Insert the cleaning roller from the clearance between the drum support and full erase head.
   (2) Align the two pins of the rotary head cleaner assembly with the two holes of the drum support.
   (3) Tighten the screw while moving the rotary head cleaner assembly in the direction indicated by the arrow B.
   (4) Write the time of replacement of the cleaning roller on the hours label pasted on the rotaing head cleaner assembly.

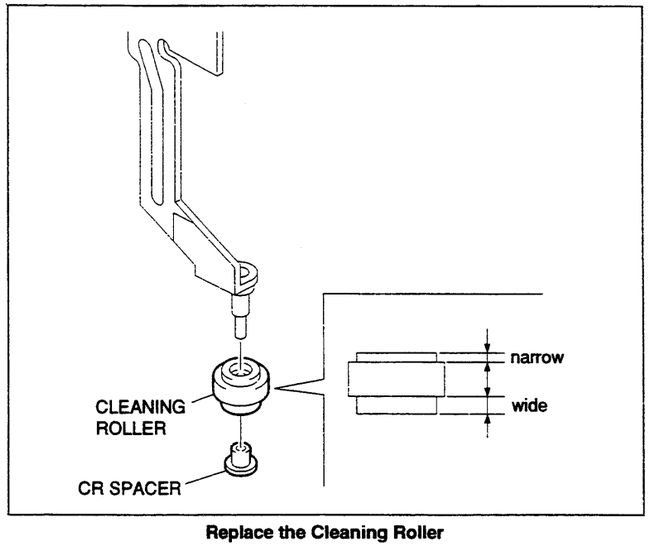

Replace the Cleaning Roller

5. **Adjust the Cleaning Roller Position**
   (1) Check that the cleaning roller does not come in contact with the inner drum as visual. (Spec.1)

   If the cleaning roller comes in contact with the inner drum, bend the portion B of the video head cleaner sub assembly in the direction of the arrow C.

   (2) Check that the cleaning roller does not come in contact with the terminal of the full erase head as visual. (Spec.2)

   If the cleaning roller comes in contact with the terminal of the full erase head, bend the portion B of the video head cleaner sub assembly in the direction of the arrow D.

   (3) Press the iron core in the direction of the arrow. At that time, check that clearance exists between the cleaner lever and the video head cleaner sub assembly. (Spec.3)

   If clearance does not exist, bend the portion B of the video head cleaner sub assembly in the direction of the arrow D.

   (4) Repeat steps (1) through (3) above until the specifications 1 through 3 are satisfied.

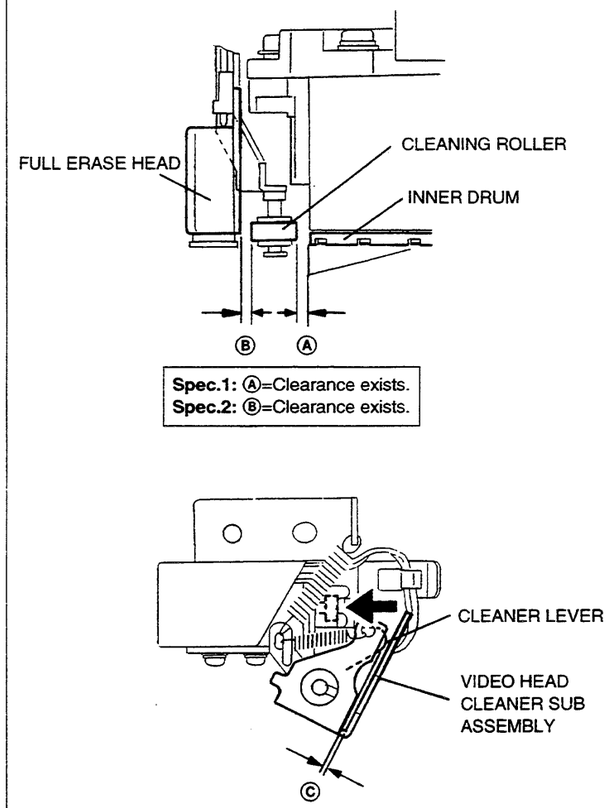

Spec.1: Ⓐ=Clearance exists.
Spec.2: Ⓑ=Clearance exists.

Spec.3: Ⓒ=Clearance exists.

• **When the specifications are not satisfied:**

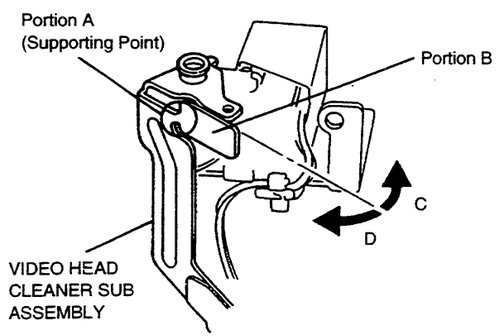

Cleaning Roller Position Adjustment

8-2-4. Cleaning Roller and Rotary Head Cleaner Assembly Replacement

6. **Install the harness**
   (1) Fix the harness to the sensor holder position shown in the figure.
   (2) Connect a connector into connector CN232 on the HN-184 board.
   (3) Bind the full erase head harness and the rotary head cleaner harness with the harness clamper (or the equivalent).

Adjustment after Replacement

7. **Confirm the Cleaning Solenoid Operation**
   Refer to Section 5-2.
   (C023: CLEANING ROLLER)

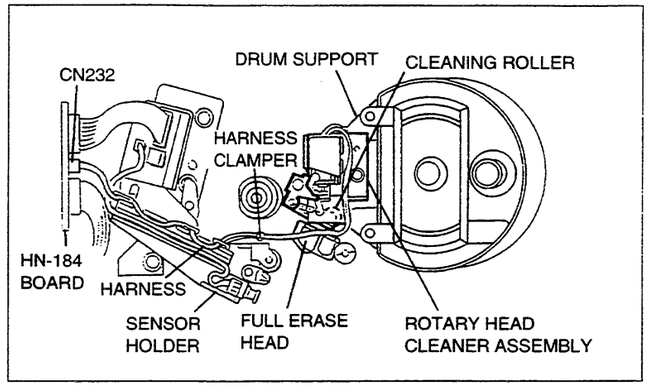

Install the Harness

8-2-5. AT Head Cleaner Replacement

Outline

Replacement	
1.	Remove the CL Arm Assembly
2.	Install the CL Arm Assembly
3.	Confirm the CL Arm Assembly Operation

Note

- When the cleaning roller becames dirty or was damaged, replace the CL arm assembly.
- Do not use the stop washer fixing the CL arm assembly again after it was removed once.
- Adjustment after the CL arm assembly replacement is not required. However, confirm the CL arm assembly operation.

Removal

1. Remove the CL Arm Assembly

(1) Turn the M gear of the gear box assembly manually and move the CL arm assembly to the position shown in the figure.

Note: Move the CL arm assembly to the front of the HN-185 board. If not, the CL arm assembly cannot be removed because the stop washer is hidden by other parts.

(2) Remove the stop washer at the top of the CL arm.

(3) Remove the CL arm assembly from the threading ring.

Caution

Do not remove the spring at the bottom of the CL arm from the shaft.

Installation

2. Install the CL Arm Assembly

(1) Pass a new CL arm assembly through the shaft while hooking the spring as shown in the figure.

Caution

Insert the short-end spring into the groove of the threading ring and the long-end spring into the hole of the CL arm assembly.

(2) Fix the CL arm assembly by the stop washer.

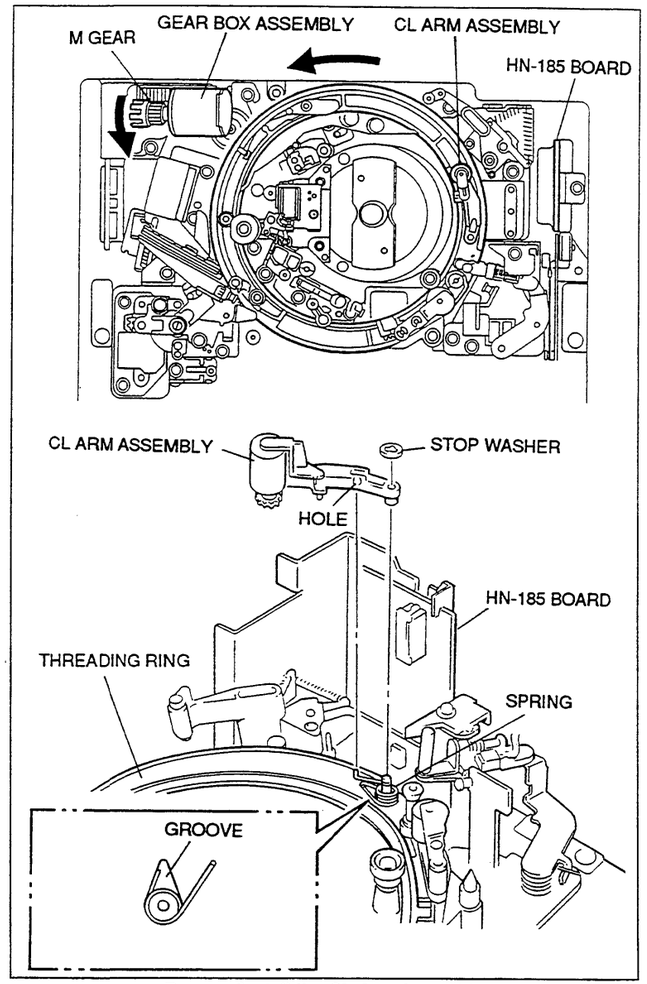

Remove/Install the CL Arm Assembly

8-2-5. AT Head Cleaner Replacement

3. Confirm the CL Arm Assembly Operation

(1) Turn the M gear of the gear box assembly manually and confirm the items below while repeating the threading and unthreading.

- The CL arm assembly moves along the CL guide rail.
- The cleaning roller cleans the audio/TC head.
- A clearance exists between the CL arm assembly and AT shield case while the audio/TC head is cleaned.

(2) Turn the power on and confirm that the CL arm assembly smoothly operates while repeating the threading and unthreading.

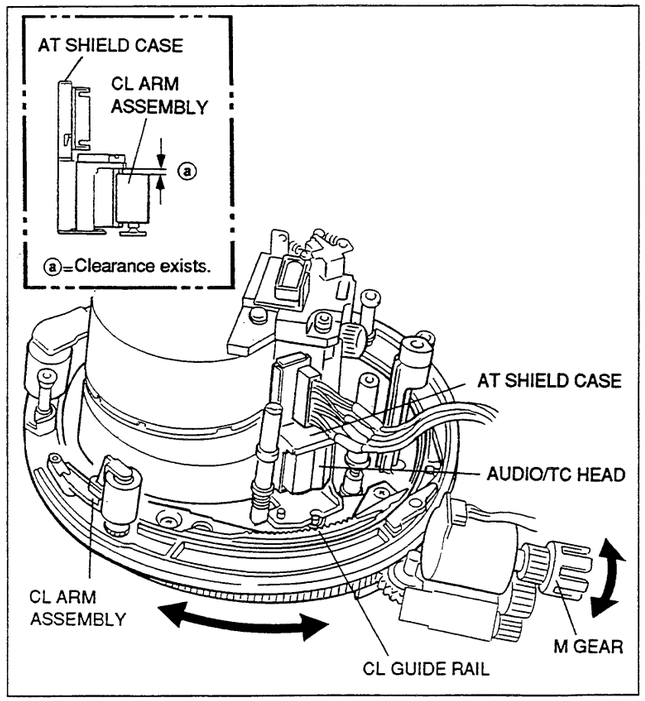

Confirm the CL Arm Assembly Operation

(Page 8-36 and 37 are missing.)

8-2-7. Pinch Roller Replacement

Outline

Replacement
1. Remove the Pinch Arm Assembly
2. Install the Pinch Arm Assembly
3. Adjust the Pinch Arm Assembly Vertical Play
4. Cleaning (Pinch Roller Surface)
Adjustment after Replacement
5. Confirm the Tape Running (Refer to Section 8-4-2.)
6. Confirm the Audio/TC Head Height (Refer to Section 8-4-6.)
7. Confirm the Audio/TC Head Azimuth (Refer to Section 8-4-7.)

Note

- When the pinch roller was damaged or worn, replace the pinch roller assembly.
- Do not use the stop washer fixing the pinch arm assembly again after it was removed once.

Tools

- Thickness gauge: 9-911-053-00
- Cleaning cloth: 3-184-527-01
- Cleaning fluid: 9-919-573-01

Removal

1. Remove the Pinch Arm Assembly

(1) Remove the stop washer at the top of the pinch arm.

Caution

If a poly-slider washer is inserted between the pinch arm assembly and the stop washer, remove it. This poly-slider washer is used for vertical play adjustment.

(2) Remove the pinch arm assembly from the threading ring.

Caution

Do not remove the poly-slider washer and spring at the bottom of the pinch arm assembly from the shaft.

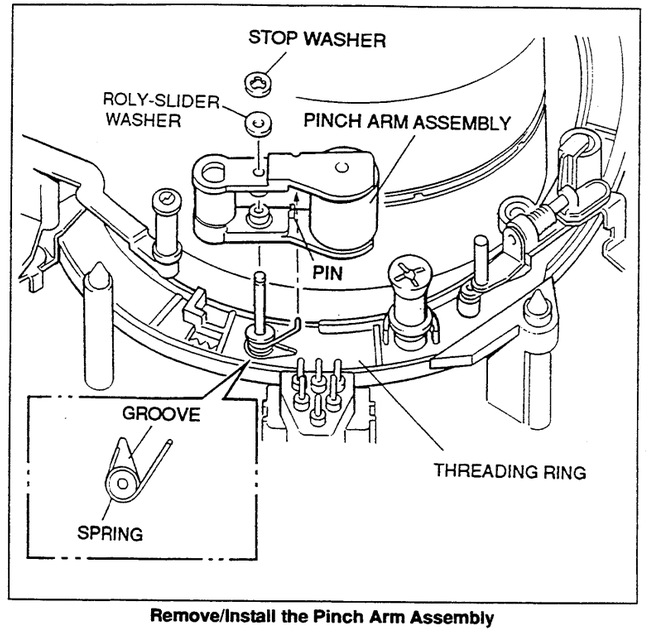

Remove/Install the Pinch Arm Assembly

Installation

2. Install the Pinch Arm Assembly

(1) Pass a new pinch arm assembly through the shaft while hooking the spring as shown in the figure.

Caution

Insert the short-end spring into the groove of the threading ring and hook the long-end spring to the pin of the pinch arm assembly.

(2) Fix the pinch arm assembly by the stop washer.

(3) Push the pinch arm assembly manually in the direction of the drum, then release. At that time, confirm that the pinch arm assembly smoothly returns to the former position.

8-2-7. Pinch Roller Replacement

3. **Adjust the Pinch Arm Assembly Vertical Play**
   Move the Pinch Arm Assembly in the vertical direction.
   At this time, confirm that the vertical play satisfies the specification.

   If the specification is not satisfied, perform the adjustment below.
   ① Remove the stop washer.
   ② Install or remove the poly-slider washer at the upper of the Pinch Arm.
   ③ Fix the pinch arm assembly by the stop washer, confirm again that the specification is met.

4. **Cleaning**
   Clean the pinch roller surface with a cleaning cloth moistened with cleaning fluid.

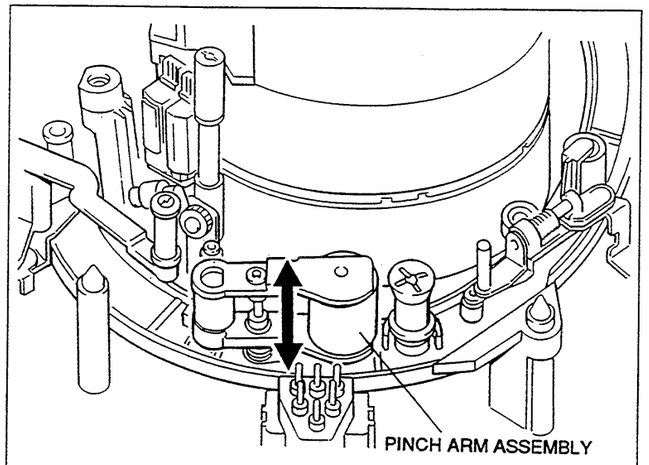

Spec.: Vertical play
0.05 mm to 0.2 mm

* If the specification is not satisfied.:
• Poly-slider washer for adjustment

Diameter	Thickness	Parts No.
3.0mm	0.13mm	3-701-439-01
	0.25mm	3-701-439-11

Adjust the Pinch Arm Assembly Vertical Play

Adjustment after Replacement

5. **Confirm the Tape Running**
   Refer to Section 8-4-2.

6. **Confirm the Audio/TC Head Height**
   Refer to Section 8-4-6.

7. **Confirm the Audio/TC Head Azimuth**
   Refer to Section 8-4-7.

8-2-8. Audio/TC Head Replacement

Outline

Replacement
1. Remove the CL Guide Rail
2. Disconnect the Connector
3. Remove the Audio/TC Head Assembly
4. Remove the Audio/TC Head
5. Install the Audio/TC Head
6. Install the Audio/TC Head Assembly
7. Connect the Connector
8. Install the CL Guide Rail
9. Cleaning (Audio/TC Head Surface)
Adjustment after Replacement
10. Adjust the Audio/TC Head Zenith (Refer to Section 8-4-1.)
11. Adjust the Tape Running (Refer to Section 8-4-2.)
12. Adjust the Audio/TC Head Height (Refer to Section 8-4-6.)
13. Adjust the Audio/TC Head Azimuth (Refer to Section 8-4-7.)
14. Adjust the Audio/TC Head Head-to-Tape Contact (Refer to Section 8-4-8.)
15. Adjust the Audio/TC Head Position (Refer to Section 8-4-9.)
16. Confirm the Audio Level in REV Mode (Refer to Section 8-4-10.)
17. Confirm the Video Tracking (Refer to Section 8-4-3.)
18. Confirm the Tape Running (Refer to Section 8-4-2.)
19. Perform the Servo/DT Check (Refer to Section 5-2.) (C04: SAT CHECK)
20. Perform the Adjustment after Audio/TC Head Replacement (Refer to Section 8-7.)

Tools

- Cleaning cloth: 3-184-527-01
- Cleaning fluid: 9-919-573-01
- Torque screwdriver (6 kg•cm) (JB-5251): J-6252-510-A
- Torque screwdriver's bit (+2 mm, l=75 mm): J-6323-420-A

Removal

1. **Remove the CL Guide Rail**
   Remove the two screws, then remove the CL guide rail.

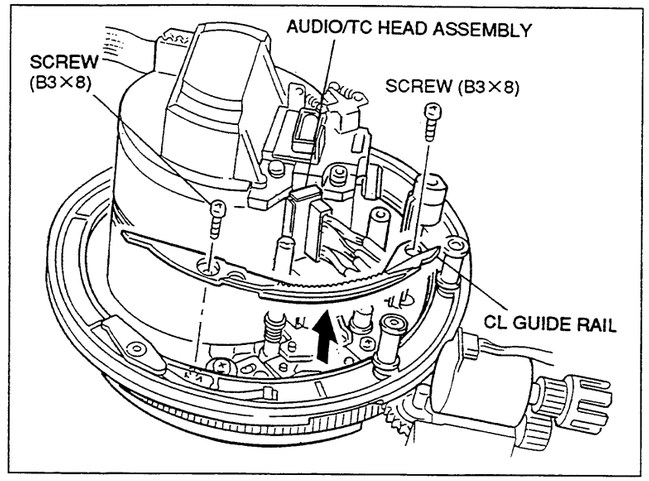

Remove the CL Guide Rail

2. **Disconnect the Connector**
   Disconnect a connector on the audio/TC head board.

3. **Remove the Audio/TC Head Assembly**
   Remove the two screws, then remove the audio/TC head assembly from the unit.

   Caution
   Be careful not to touch the drum (especially rotary heads). Also, take care not to damage the peripheral tape guides.

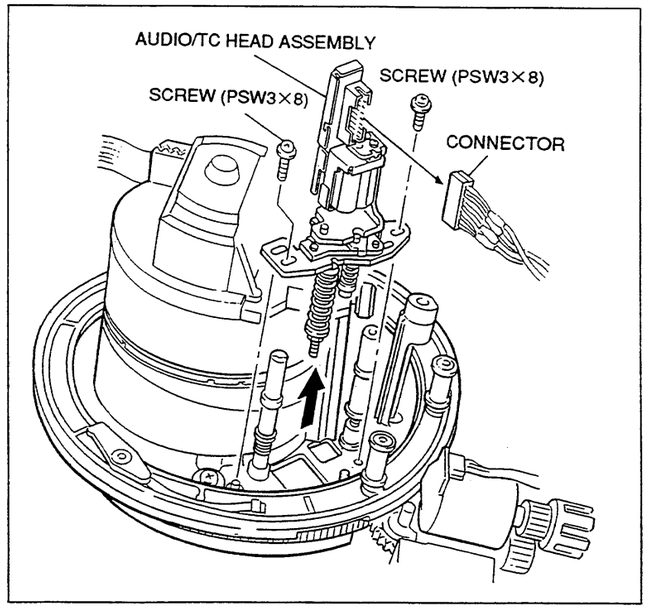

Remove the Audio/TC Head Assembly

4. Remove the Audio/TC Head

(1) Remove the two screws, then remove the audio/TC head and adjustment plate from the AT bracket.
(2) Remove the AT shield case.
(3) Remove the AT shield plate.

Installation

5. Install the Audio/TC Head

(1) Put a new head into the AT shield case and align the hole position.
(2) Align the hole position with the adjustment plate put between the audio/TC head and AT bracket, then tighten the two screws tentatively.
(3) Tighten the screws after confirming that the specification is satisfied.

Tightening torque: 19.6×10^{-2} N•m
(2 kg•cm)

(4) Hook the claw of the AT shield plate on the audio/TC head board.

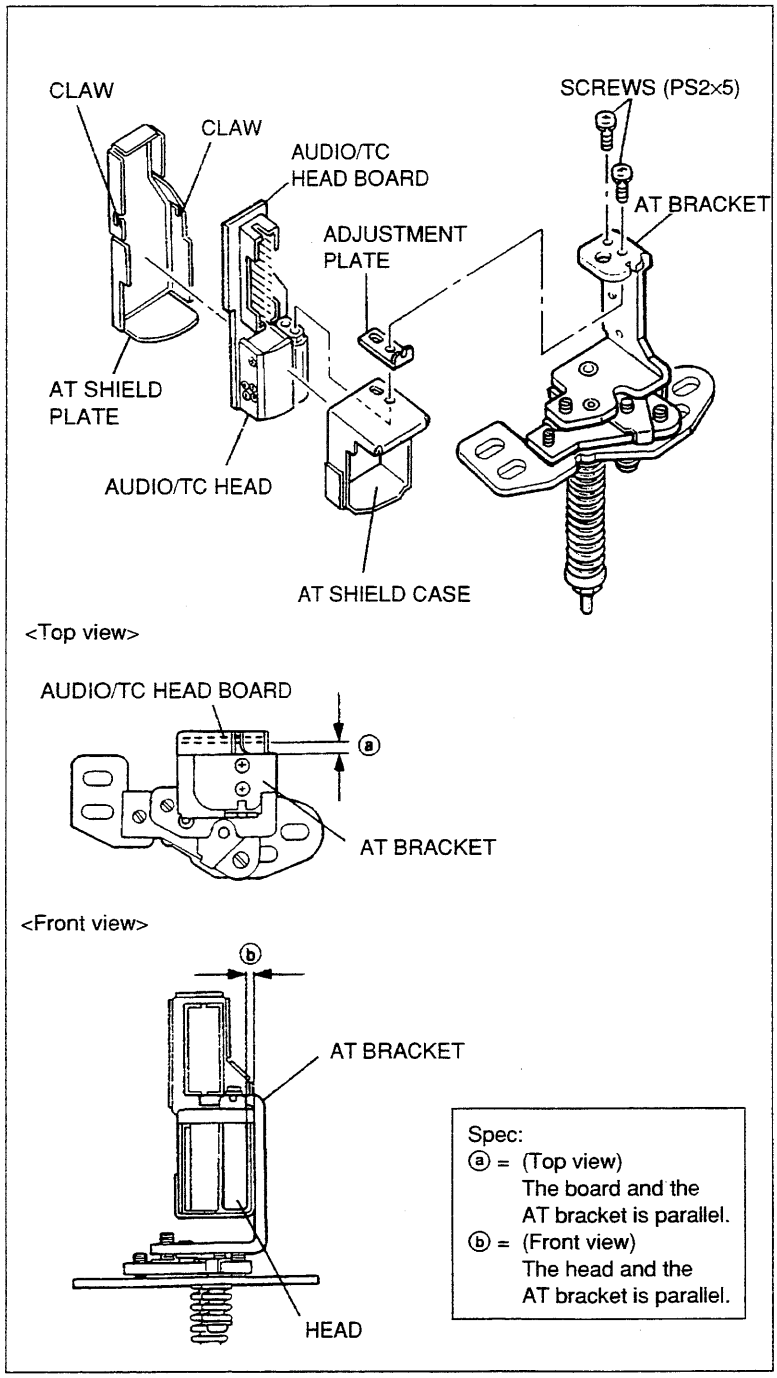

Remove/install the Audio/TC Head

6. Install the Audio/TC Head Assembly

(1) Align the two longitudinal holes of the Audio/TC head assembly with the two bosses of the chassis.

Caution

1. Be careful not to touch the drum (especially rotary heads). Also, take care not to damage the peripheral tape guides.
2. Be careful not to damage the audio/TC head surface.

(2) Align the bosses of the chassis with center of the longitudinal holes and tighten the two screws.

7. Connect the Connector

Connect a connector into the audio/TC head board.

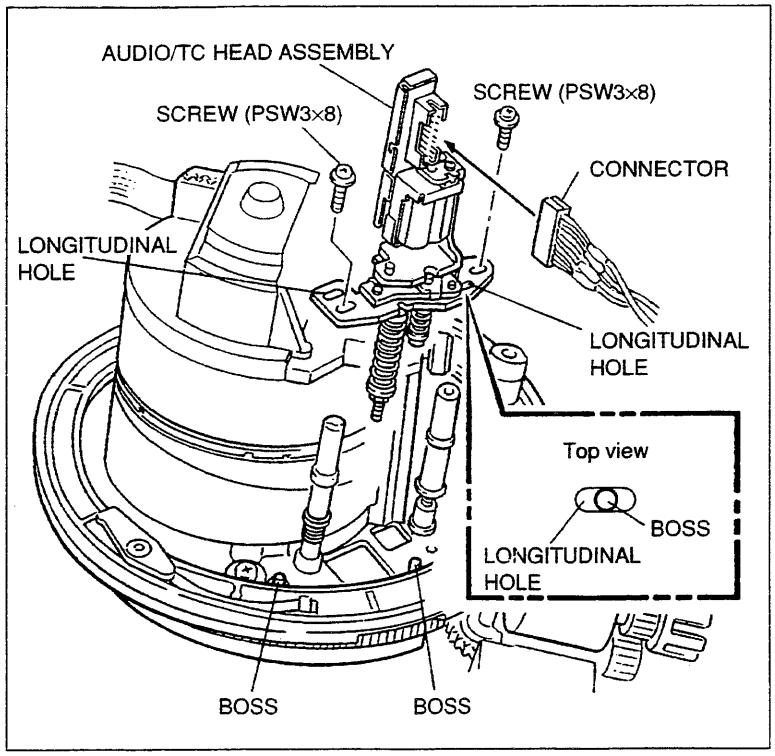

Install the Audio/TC Head Assembly

8. Install the CL Guide Rail

Install the CL guide rail with two screws.

9. Cleaning

Clean the audio/TC head surface with a cleaning cloth moistened with cleaning fluid.

Caution

After cleaning, wipe with a dry cleaning cloth.

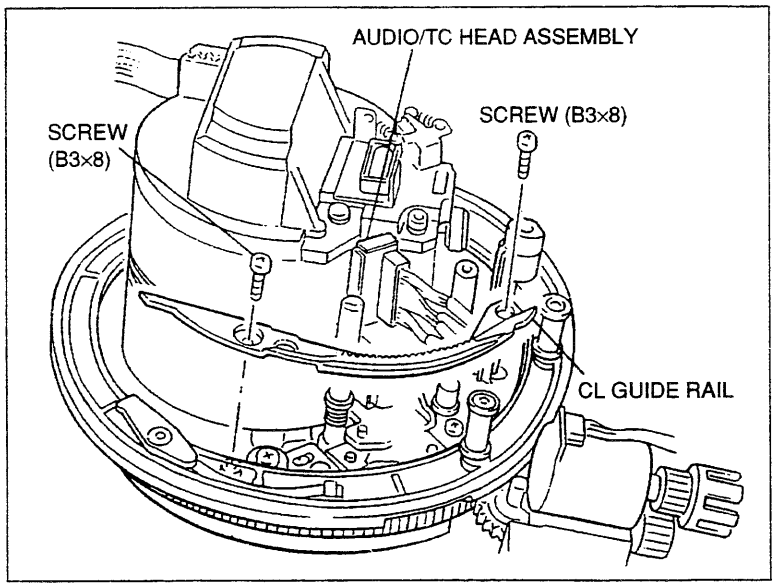

Install the CL Guide Rail

8-2-8. Audio/TC Head Replacement

Adjustment after Replacement

10. **Adjust the Audio/TC Head Zenith**
    Refer to Section 8-4-1.

11. **Adjust the Tape Running**
    Refer to Section 8-4-2.

12. **Adjust the Audio/TC Head Height**
    Refer to Section 8-4-6.

13. **Adjust the Audio/TC Head Azimuth**
    Refer to Section 8-4-7.

14. **Adjust the Audio/TC Head Head-to-Tape Contact**
    Refer to Section 8-4-8.

15. **Adjust the Audio/TC Head Position**
    Refer to Section 8-4-9.

16. **Confirm the Audio Level in REV Mode**
    Refer to Section 8-4-10.

17. **Confirm the Video Tracking**
    Refer to Section 8-4-3.

18. **Confirm the Tape Running**
    Refer to Section 8-4-2.

19. **Perform the Servo/DT Check**
    Refer to Section 5-2. (C04: SAT CHECK)

20. **Perform the Adjustment after Audio/TC Head Replacement**
    Refer to Section 8-7.

8-43

8-2-9. CTL Head Replacement

Outline

Replacement
1. Disconnect the Connector
2. Remove the CTL/FE Head Assembly
3. Remove the CTL Head
4. Install the CTL Head
5. Install the CTL/FE Head Assembly
6. Connect the Connector
7. Cleaning (CTL Head Surface)
Adjustment after Replacement
8. Adjust the Tape Running (Refer to Section 8-4-2.)
9. Adjust the CTL Head Height (Refer to Section 8-4-4.)
10. Adjust the CTL Head Position (Refer to Section 8-4-5.)
11. Confirm the Tape Running (Refer to Section 8-4-2.)
12. Confirm the Audio/TC Position (Refer to Section 8-4-9.)
13. Adjust Drum Phase (Refer to Section 8-5-1.)

Tools

- Cleaning cloth: 3-184-527-01
- Cleaning fluid: 9-919-573-01
- Torque screwdriver (6 kg•cm) (JB-5251): J-6252-510-A
- Torque screwdriver's bit (+2 mm, l=75 mm): J-6323-420-A

Note

The replacement procedures for the CTL head depend on the serial number of the unit.

① If the unit applies to the following serial number, replace the CTL head referring to "For the New Component" (page 8-44 to 8-45).

- DVW-A500P (EK): S/N 12036 and higher
- DVW-500P (EK): S/N 11046 and higher
- DVW-A500 (UC): S/N 11288 and higher
- DVW-500 (UC): S/N 11667 and higher

② If the unit applies to the following serial number, replace the CTL head referring to "For the Old Component" (page 8-46 to 8-48).

- DVW-A500P (EK): S/N 10001 thru. 12035
- DVW-500P (EK): S/N 10001 thru. 11045
- DVW-A500 (UC): S/N 10001 thru. 11287
- DVW-500 (UC): S/N 10001 thru. 11666

For the New Component

Removal

1. **Disconnect the Connector**
   Disconnect the connectors on the CTL head board and full erase head board.

2. **Remove the CTL/FE Head Assembly**
   Remove the screw, then remove the CTL/FE head assembly.

   Caution
   Be careful not to touch the drum (especially rotary heads). Also, take care not to damage the peripheral tape guides.

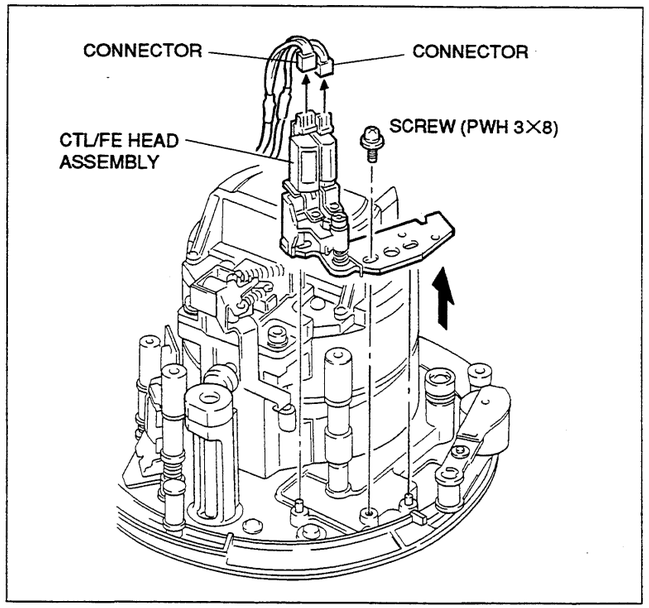

Remove the CTL/FE Head Assembly

3. **Remove the CTL Head**
   (1) Remove the two CTL head fixing screws, then remove the CTL head.

   Caution
   1. Be careful not to damage the full erase head when removing the CTL head.
   2. Never loosen or remove the screws except for the CTL head fixing screws. If these screws are loosened or removed, the zenith of the CTL head and full erase head will be out of specification.

   (2) Unsolder the connector pin.

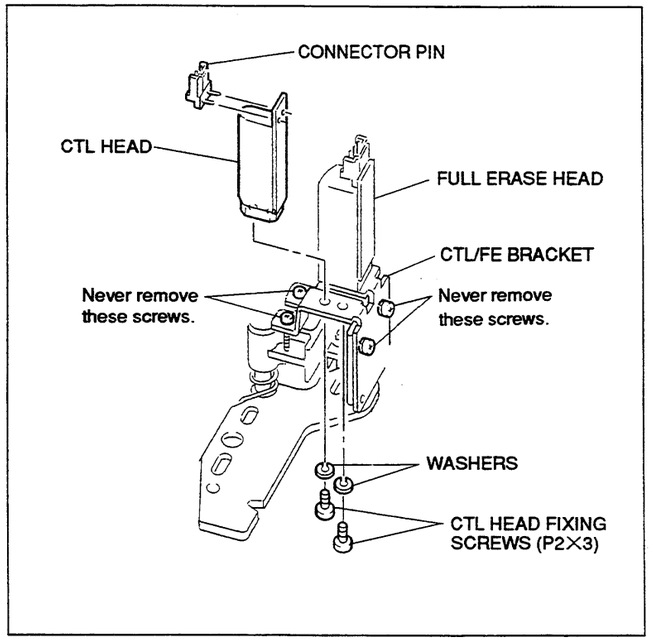

Remove the CTL Head

Installation

4. Install the CTL Head

(1) Solder the connector pin to the CTL head board.

(2) Tighten the two screws while moving the CTL head in the direction indicated by arrows A and B.

Tightening torque: 19.6×10^{-2} N•m (2kg•cm)

Caution

Be caeful not to damage the full erase head and CTL head.

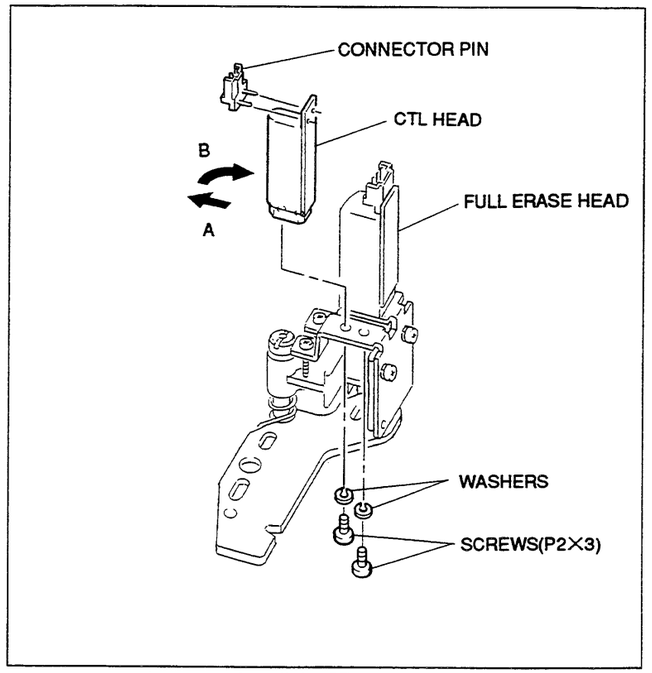

Install the CTL Head

5. Install the CTL/FE Head Assembly

(1) Confirm that the threading ring is in the unthreading end state.

(2) Align longitudinal holes A and B of the CTL/FE head assembly with the bosses of the chassis.

Caution

Be careful not to touch the drum (especially rotary heads). Also, take care not to damage the peripheral tape guides.

(3) Align the boss of the chassis with center of the longitudinal hole A and tighten the screw.

6. Connect the Connector

Connect the connectors into the CTL head board and full erase head board.

7. Cleaning

Clean the CTL head and full erase head surfaces with a cleaning cloth moistened with cleaning fluid.

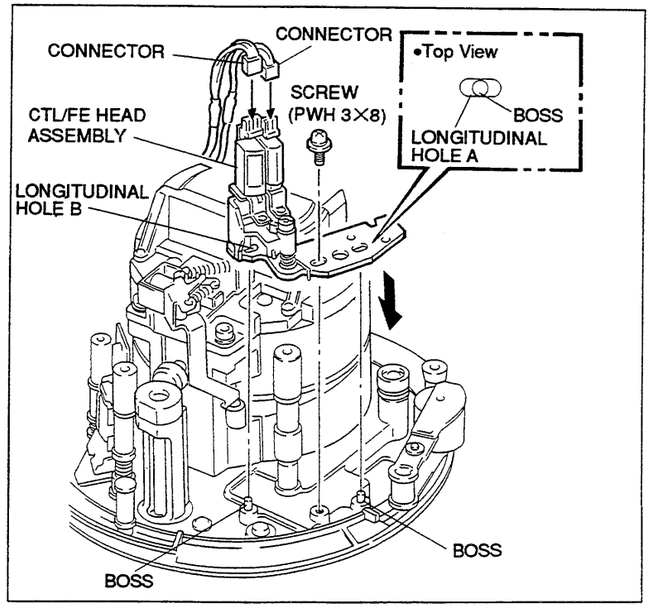

Install the CTL/FE Head Assembly

Adjustment after Replacement

8. Adjust the Tape Running

Refer to Section 8-4-2.

9. Adjust the CTL Head Height

Refer to Section 8-4-4.

10. Adjust the CTL Head Position

Refer to Section 8-4-5.

11. Confirm the Tape Running

Refer to Section 8-4-2.

12. Confirm the Audio/TC Head Position

Refer to Section 8-4-9.

13. Adjust the Drum Phase

Refer to Section 8-5-1.

For the Old Component

Removal

1. **Disconnect the Connector**
   Disconnect the connectors on the CTL head board and full erase head board.

2. **Remove the CTL/FE Head Assembly**
   Remove the screw, then remove the CTL/FE head assembly.

   Caution
   Be careful not to touch the drum (especially rotary heads). Also, take care not to damage the peripheral tape guides.

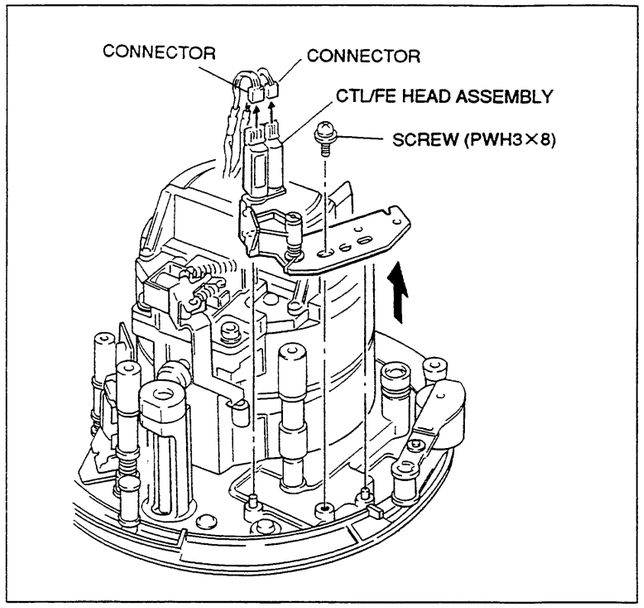

Remove the CTL/FE Head Assembly

3. **Remove the CTL Head**
   (1) Remove the two screws, then remove the CTL head.

   Caution
   1. Be careful not to damage the full erase head when removing the CTL head.
   2. Never loosen or remove the two screws fixing the CTL/FE bracket.
      If these screws are loosened or removed, the zenith of the CTL head and full erase head will be out of specification.

   (2) Unsolder the connector pin.

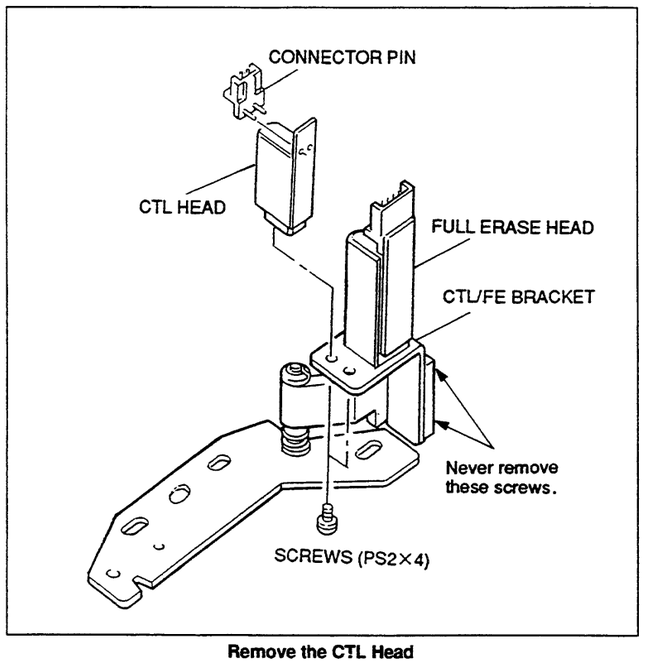

Remove the CTL Head

Installation

4. **Install the CTL Head**
   (1) Solder the connector pin to the CTL head board.
   (2) Tighten the two screws tentatively while moving the CTL head in the direction indicated by arrows A and B.

   Caution
   Be caeful not to damage the full erase head and CTL head.

   (3) Tighten the screws after confirming that the specification is satisfied.

   Tightening torque: 19.6×10^{-2} N•m
   (2kg•cm)

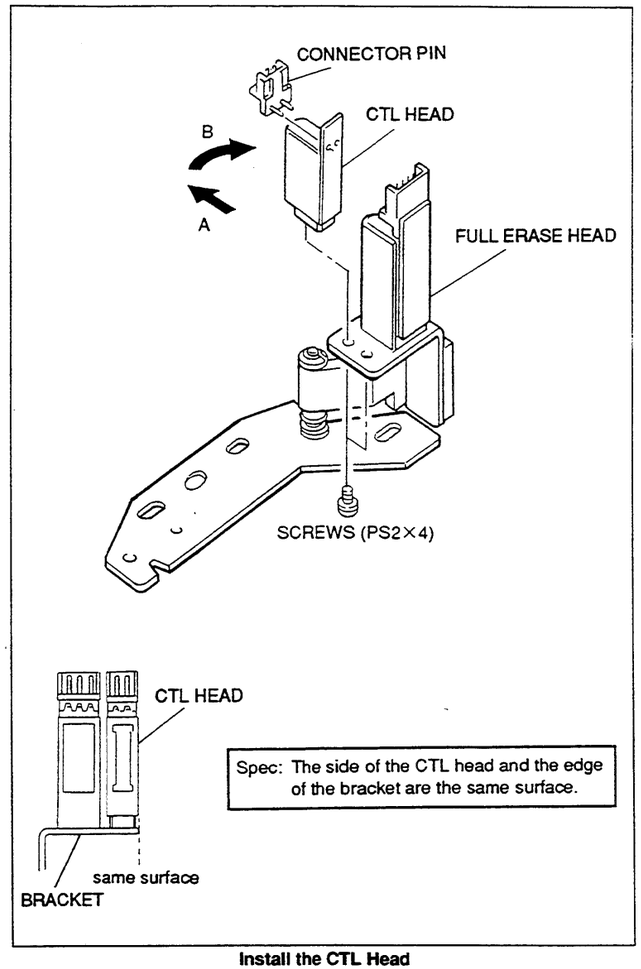

Install the CTL Head

8-2-9. CTL Head Replacement

5. **Install the CTL/FE Head Assembly**
   (1) Confirm that the threading ring is in the unthreading end state.
   (2) Align longitudinal holes A and B of the CTL/FE head assembly with the bosses of the chassis.

   Caution
   Be careful not to touch the drum (especially rotary heads). Also, take care not to damage the peripheral tape guides.

   (3) Align the boss of the chassis with center of the longitudinal hole A and tighten the screw.

6. **Connect the Connector**
   Connect the connectors into the CTL head board and full erase head board.

7. **Cleaning**
   Clean the CTL head and full erase head surfaces with a cleaning cloth moistened with cleaning fluid.

   Caution
   After cleaning, wipe with a dry cleaning cloth.

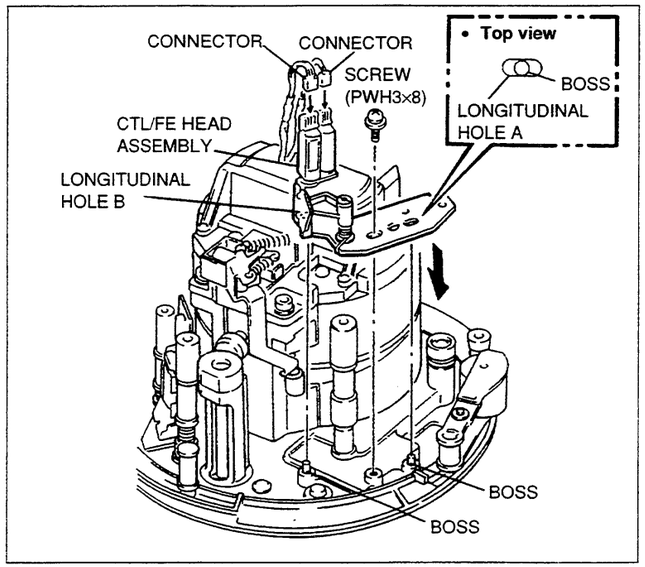

Install the CTL/FE Head Assembly

Adjustment after Replacement

8. **Adjust the Tape Running**
   Refer to Section 8-4-2.

9. **Adjust the CTL Head Height**
   Refer to Section 8-4-4.

10. **Adjust the CTL Head Position**
    Refer to Section 8-4-5.

11. **Confirm the Tape Running**
    Refer to Section 8-4-2.

12. **Confirm the Audio/TC Head Position**
    Refer to Section 8-4-9.

13. **Adjust the Drum Phase**
    Refer to Section 8-5-1.

8-47

8-2-10. Capstan Motor Replacement

Outline

Replacement
1. Remove the Rotary Head Cleaner Assembly
2. Open the DR-307/200 Board
3. Remove the Capstan Motor
4. Install the Capstan Motor
5. Close the DR-307/200 Board
6. Install the Rotary Head Cleaner Assembly
7. Cleaning (Capstan Motor Shaft)
Adjustment after Replacement
8. Confirm the Pinch Press Clearance (Refer to Section 8-3-1.)
9. Confirm the Tape Running (Refer to Section 8-4-2.)
10. Confirm the Capstan Motor Operation (Refer to Section 5-2.) (C014 : CAPSTAN MOTOR)
11. Adjust the Capstan FG Duty (Refer to Section 5-7.) (A003 : CAPSTAN FG DUTY)
12. Adjust the Capstan Free Speed (Refer to Section 5-7.) (A010 : CAPSTAN FREE SPEED)
13. Store the Adjustment Data (Refer to Section 5-7.) (A012 : NV-RAM CONTROL)
14. Adjust the Capstan FG Level (Refer to Section 5-7.) (A020 : CAPSTAN FG LEVEL)
15. Store the Adjustment Data (Refer to Section 5-7.) (A023 : NV-RAM CONTROL)

Note

Replace the capstan motor with the left side panel of the unit down.

Tools

- Cleaning cloth: 3-184-527-01
- Cleaning fluid: 9-919-573-01

Removal

1. **Remove the Rotary Head Cleaner Assembly**
   (1) Disconnect a connector from connector CN232 on the HN-184 board.
   (2) Cut the harness clamper.
   (3) Remove the harness from the sensor holder.
   (4) Remove the screw, shift the rotary head cleaner assembly in the direction indicated by the arrow A, and remove it from the drum support.

   Note: To remove the fixing screws of the capstan motor, remove the rotary head cleaner assembly.

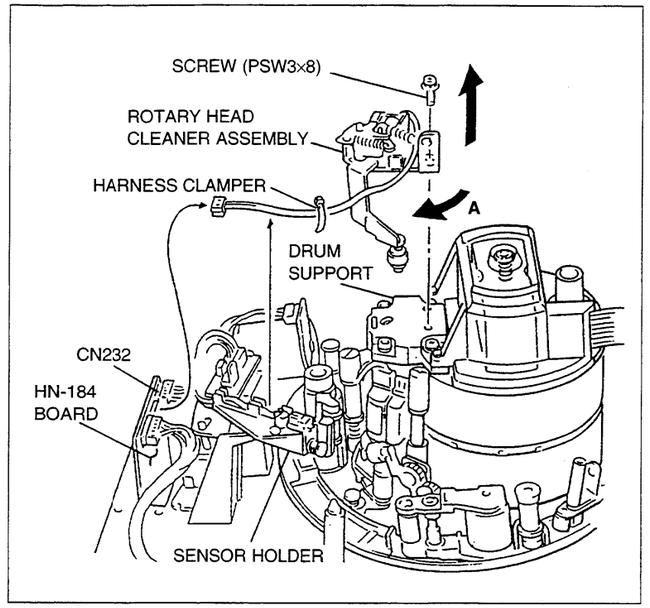

Remove the Rotary Head Cleaner Assembly

2. **Open the DR-307/200 Board**
   Open the DR-307/200 board with the left side panel of the unit down.

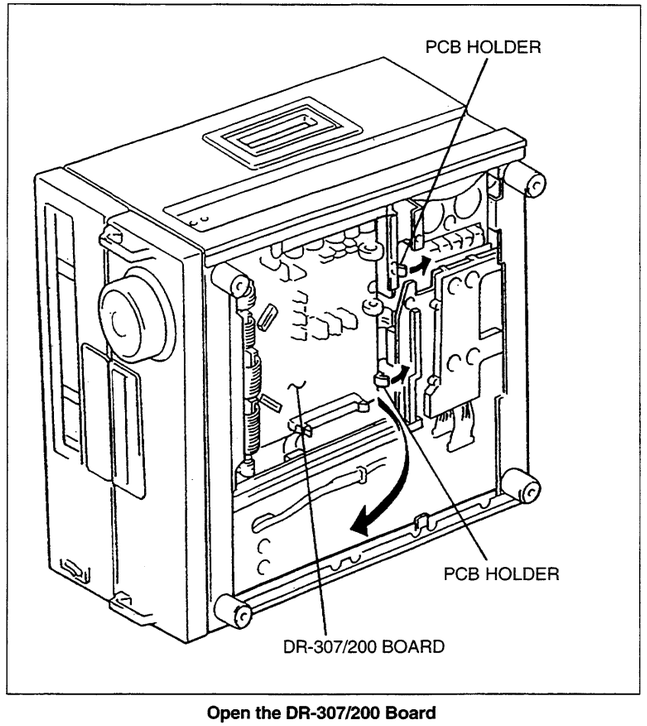

Open the DR-307/200 Board

3. Remove the Capstan Motor

(1) Disconnect the connector on the capstan motor board.

(2) Remove the two screws while holding the capstan motor by hand.

Caution

Be careful not to drop the capstan motor.

Installation

4. Install the Capstan Motor

(1) Pass a new capstan motor through the hole of the chassis in the direction shown in the figure and tighten the two screws.

Caution

Be careful not to damage the capstan motor shaft when passing the capstan motor through the hole of the chassis.

(2) Connect the connector disconnected in (1) of step 3 to the capstan motor board.

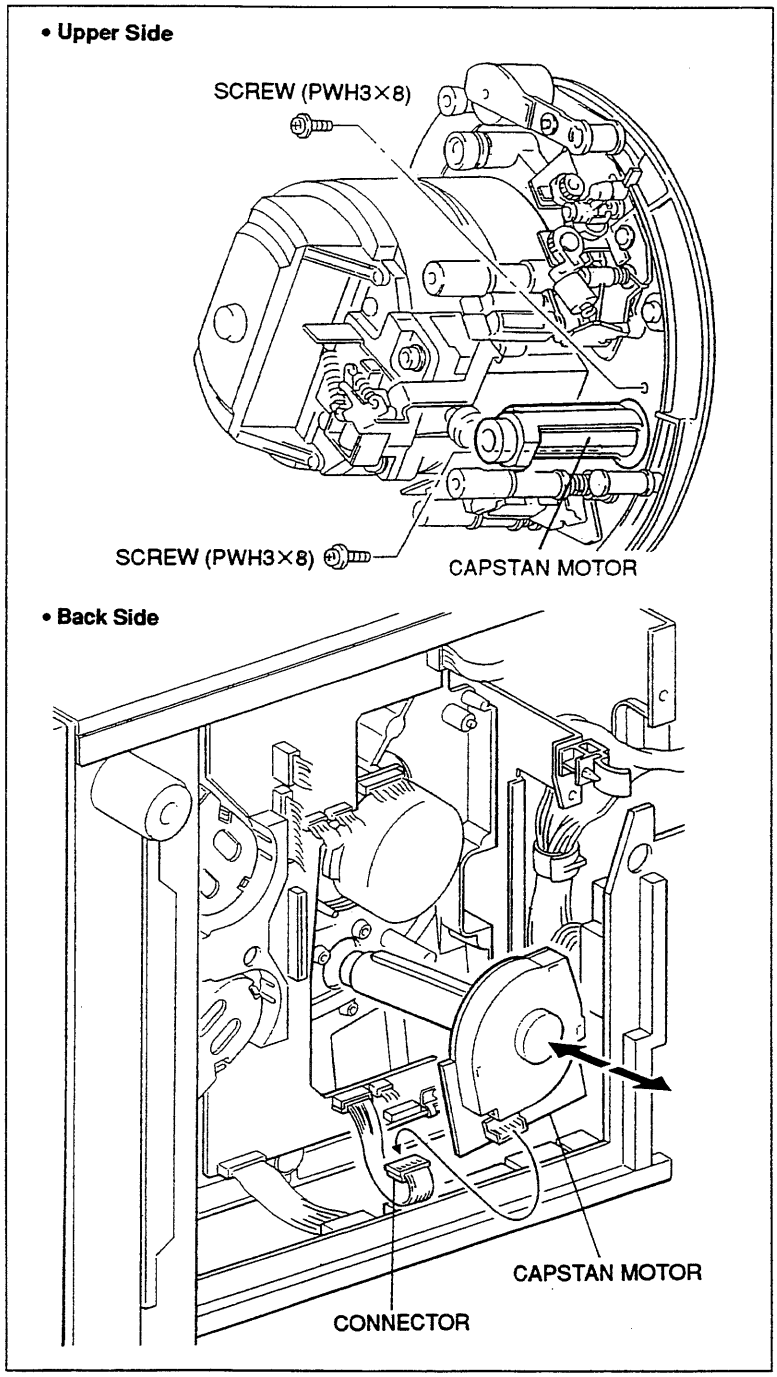

Remove/Install the Capstan Motor

5. Close the DR-307/200 Board

Put the two holes on the DR-307/200 board into the two portions A of the PCB holder shown in the figure.

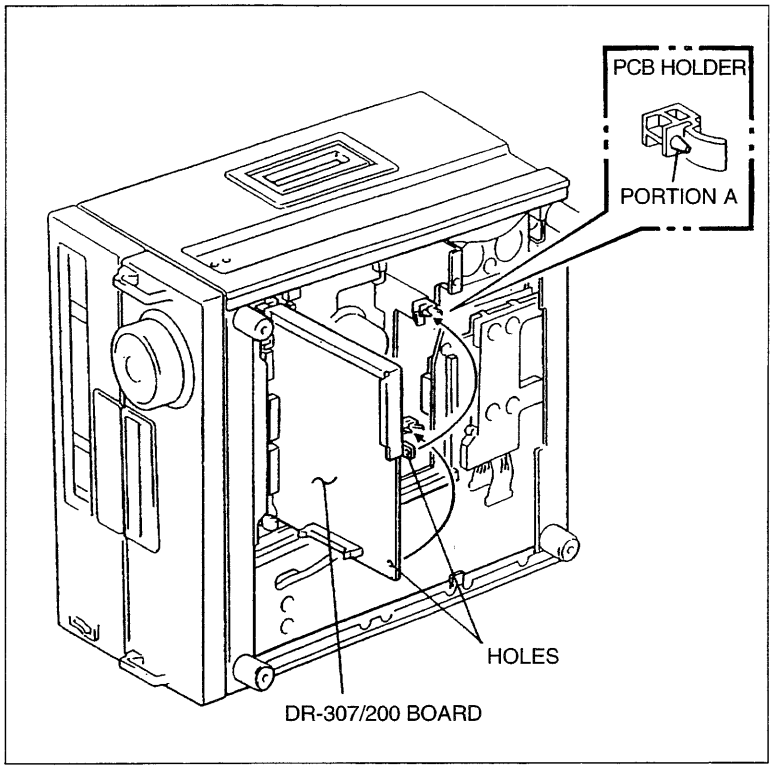

Close the DR-307/200 Board

6. **Install the Rotary Head Cleaner Assembly**
   (1) Insert the cleaning roller from the clearance between the drum support and full erase head as shown in the figure.
   (2) Align the two pins of the rotary head cleaner assembly with the two holes of the drum support.
   (3) Tighten the screw while moving the rotary head cleaner assembly in the direction indicated by the arrow A.
   (4) Fix the harness to the sensor holder position shown in the figure.
   (5) Connect a connector into connector CN232 on the HN-184 board.
   (6) Bind the full erase head harness and the rotary head cleaner harness with the harness clamper (or the equivalent).

7. **Cleaning**
   Clean the capstan motor shaft with a cleaning cloth moistened with cleaning fluid.

Caution
After cleaning, wipe with a dry cleaning cloth.

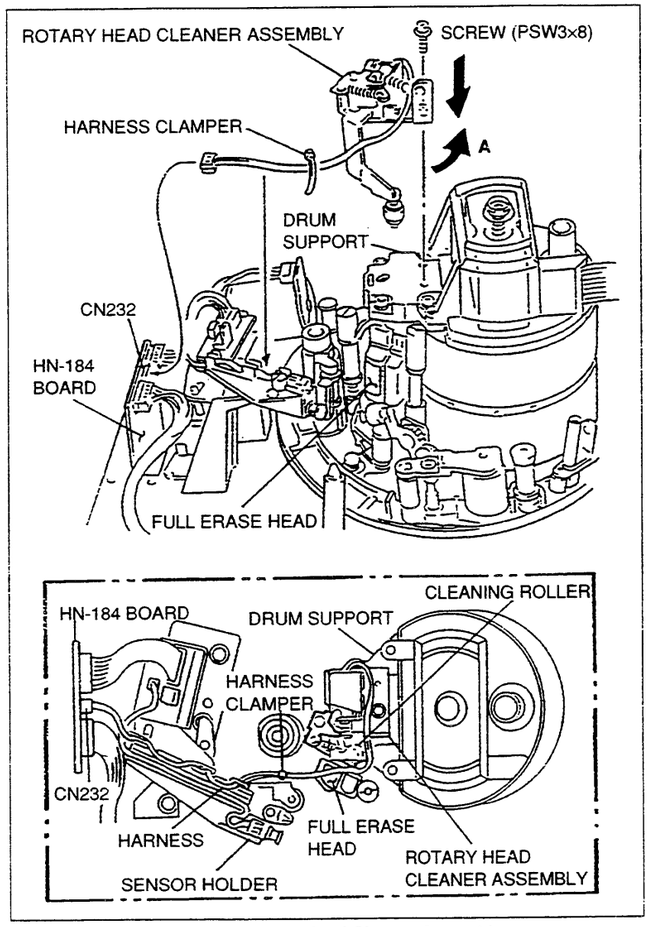

Install the Rotary Head Cleaner Assembly

Adjustment after Replacement

8. **Confirm the Pinch Press Clearance**
   Refer to Section 8-3-1.

9. **Confirm the Tape Running**
   Refer to Section 8-4-2.

10. **Confirm the Capstan Motor Operation**
    Refer to Section 5-2.
    (C014 : CAPSTAN MOTOR)

11. **Adjust the Capstan FG Duty**
    Refer to Section 5-7.
    (A003 : CAPSTAN FG DUTY)

12. **Adjust the Capstan Free Speed**
    Refer to Section 5-7.
    (A010 : CAPSTAN FREE SPEED)

13. **Store the Adjustment Data**
    Refer to Section 5-7.
    (A012 : NV-RAM CONTROL)

14. **Adjust the Capstan FG Level**
    Refer to Section 5-7.
    (A020 : CAPSTAN FG LEVEL)

15. **Store the Adjustment Data**
    Refer to Section 5-7.
    (A023 : NV-RAM CONTROL)

8-2-10. Capstan Motor Replacement
8-51

8-2-11. Pinch Solenoid Replacement

Outline

Replacement
1. Disconnect the Connector (CN854/PD-35 Board)
2. Remove the Pinch Press Assembly
3. Remove the PD-35 Board
4. Remove the P Stopper
5. Remove the Pinch Solenoid
6. Install the Pinch Solenoid
7. Install the P Stopper
8. Install the PD-35 Board
9. Install the Pinch Press Assembly
10. Connect the Connector (CN854/PD-35 Board)
Adjustment after Replacement
11. Confirm the Pinch Solenoid Operation (Refer to Section 5-2.) (C020 : PINCH ROLLER)
12. Adjust the Pinch Press Clearance (Refer to Section 8-3-1.)

Removal

1. **Disconnect the Connector**
   Disconnect connector CN854 on the PD-35 board.

2. **Remove the Pinch Press Assembly**
   Remove the two screws, then remove the pinch press assembly from the unit.

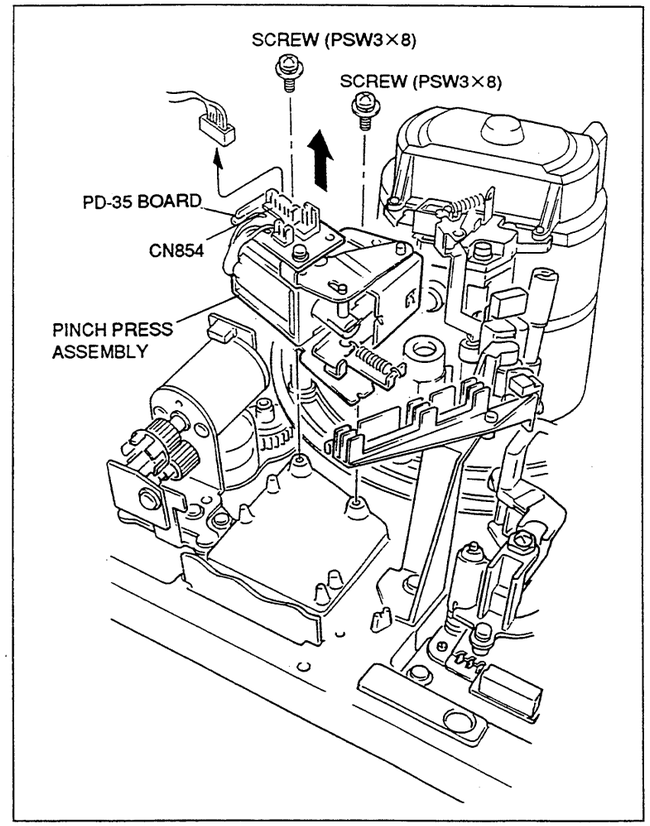

Remove the Pinch Press Assembly

3. Remove the PD-35 Board

(1) Remove the screw, then remove the PD-35 board from the pinch press assembly.

(2) Unsolder the three harnesses wired on the PD-35 board.

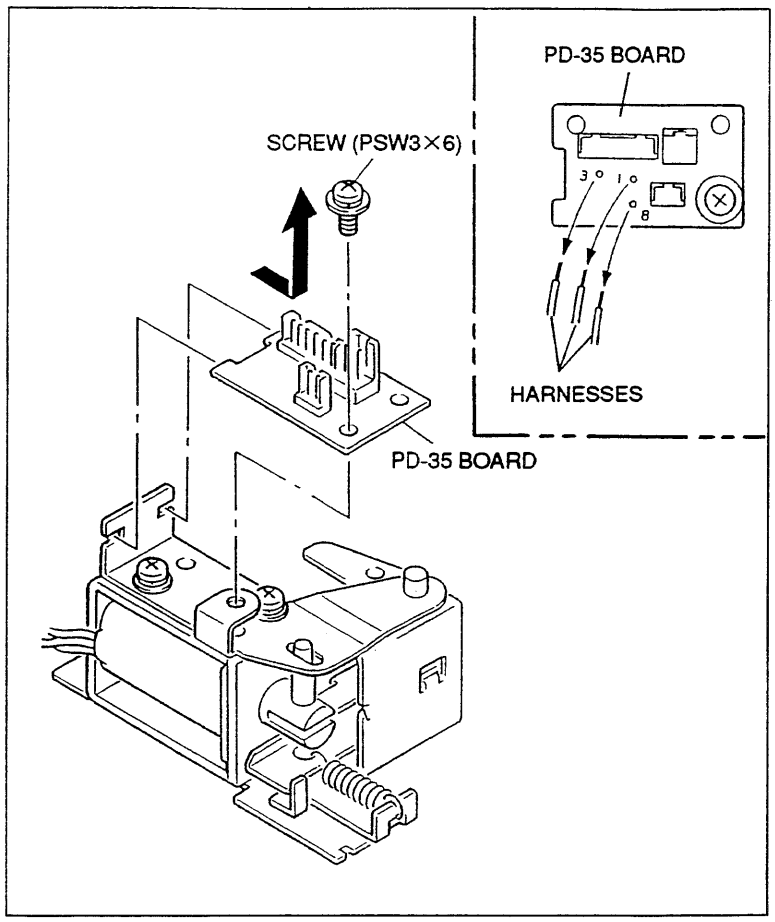

Remove the PD-35 Board

4. Remove the P Stopper

Remove the two screws and washers, then remove the P stopper.

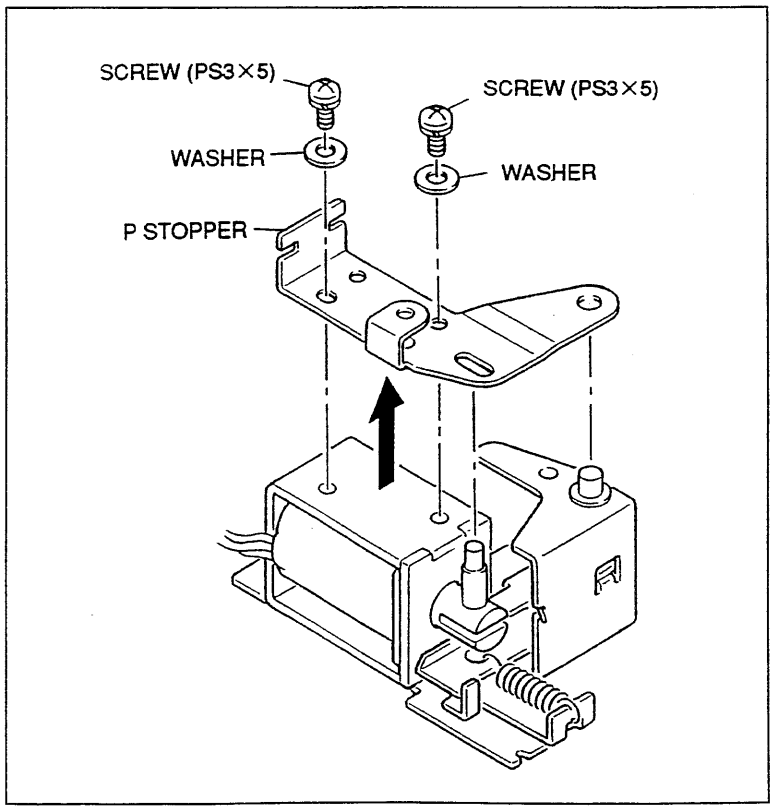

Remove the P Stopper

5. Remove the Pinch Solenoid

(1) Extract the P joint shaft.

(2) Remove the two screws and washers, then remove the pinch solenoid.

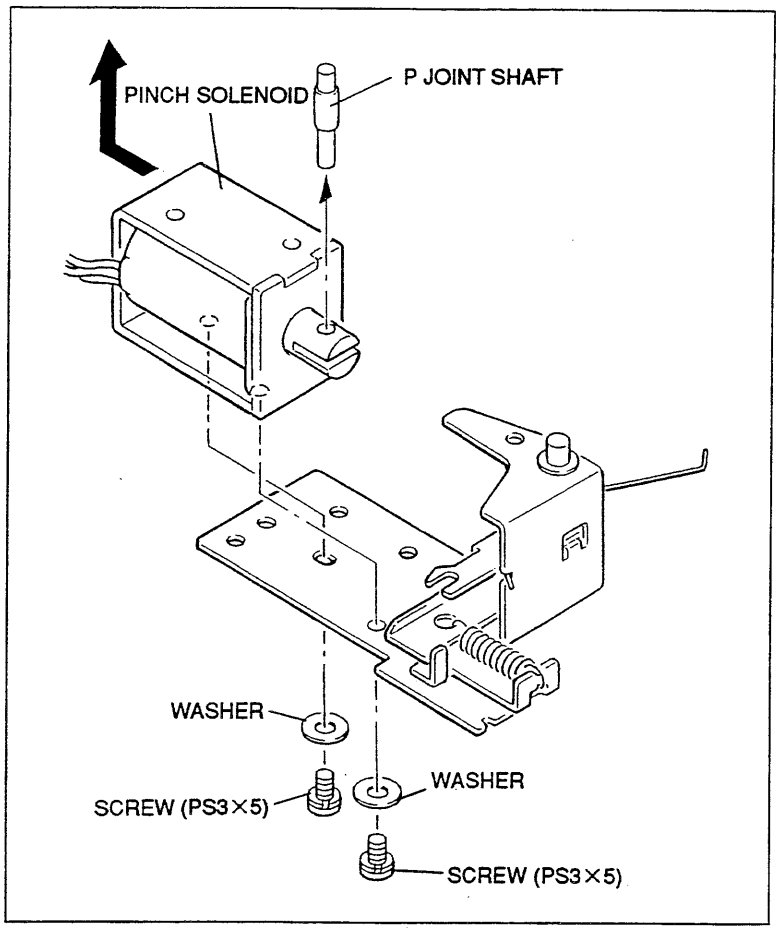

Remove the Pinch Solenoid

Installation

6. Install the Pinch Solenoid

(1) Install a new solenoid to the P base in the direction shown in the figure.

(2) Bend the spring in the direction indicated by the arrow and bring it into contact with surface A of the solenoid shown in the figure.

(3) Put the P limiter into the notch of the solenoid's iron core and pass the P joint shaft through the hole of the iron core in the direction shown in the figure.

(4) Confirm that the other end of the spring is put on the notch of the P press lever.

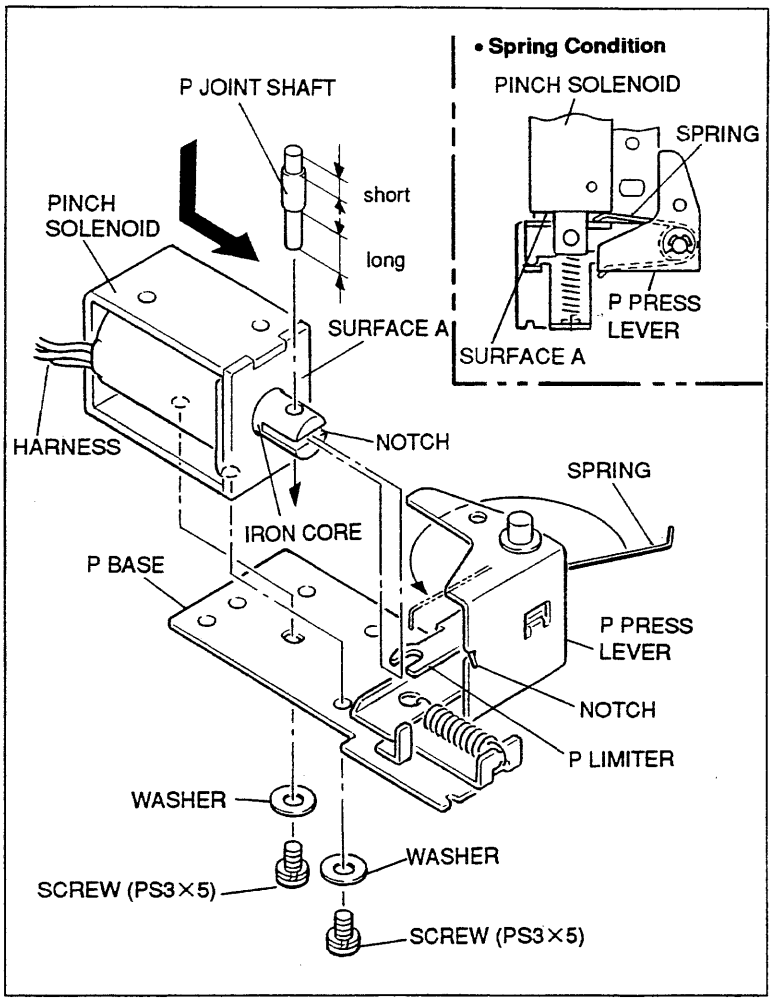

Install the Pinch Solenoid

7. Install the P Stopper

(1) Pass the longitudinal hole of the P stopper through the P joint shaft, then pass the round hole through the shaft of the P press lever.

(2) Put the washers and tighten the screws.

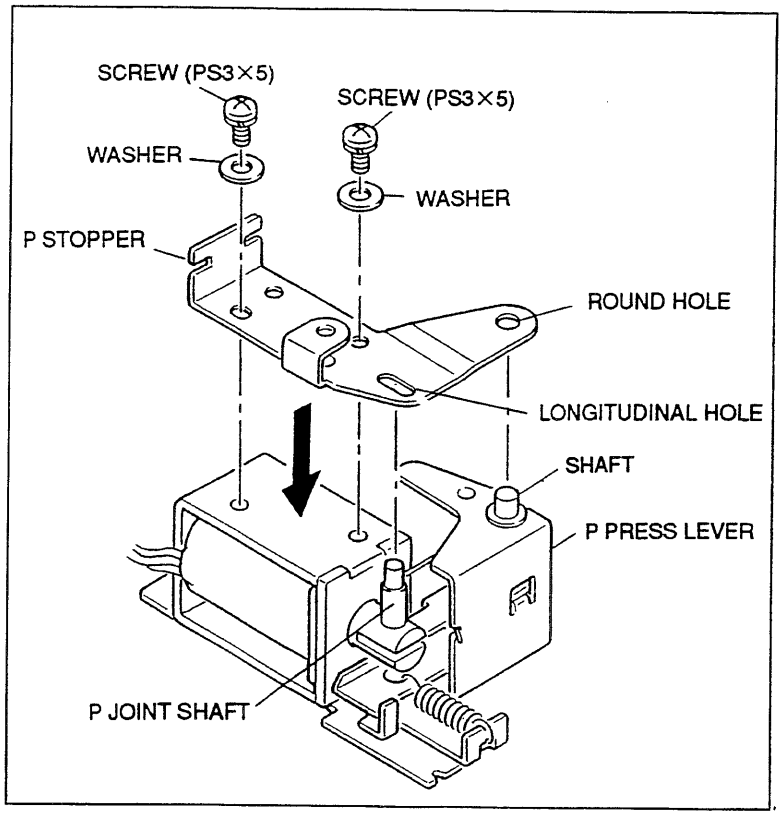

Install the P Stopper

8. Install the PD-35 Board

(1) Wire the harnesses to the PD-35 board as shown in the figure, then solder.

(2) Insert the PD-35 board into the P stopper and tighten the screw.

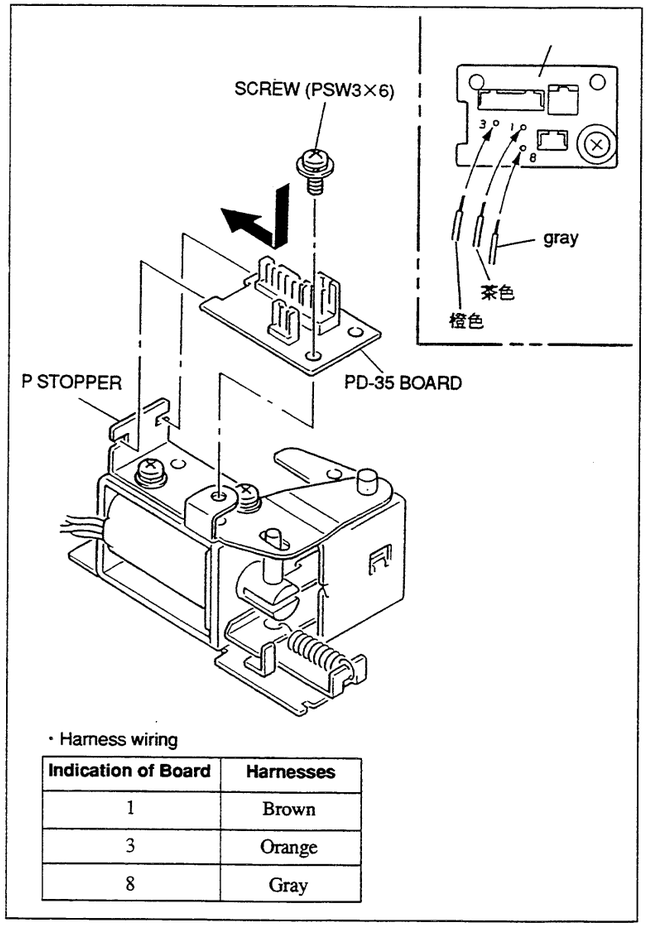

· Harness wiring

Indication of Board	Harnesses
1	Brown
3	Orange
8	Gray

Install the PD-35 Board

9. Install the Pinch Press Assembly

Align the notch of the pinch press assembly with the center of the pin and tighten the two screws.

10. Connect the Connector

Connect the connector into connector CN854 on the PD-35 board.

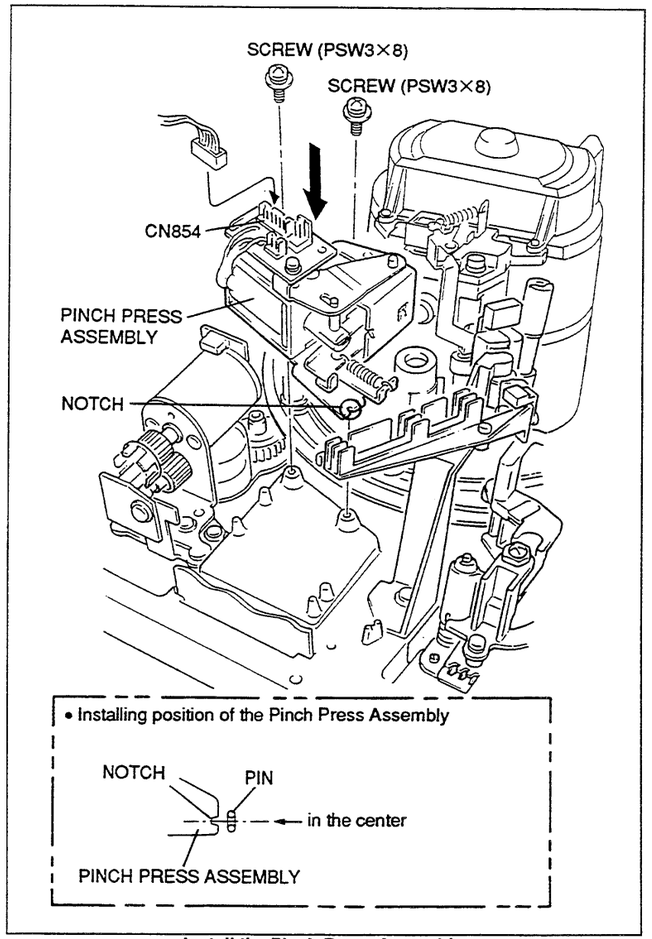

Install the Pinch Press Assembly

Adjustment after Replacement

11. Confirm the Pinch Solenoid Operation

Refer to Section 5-2.
(C020 : PINCH ROLLER)

12. Adjust the Pinch Press Clearance

Refer to Section 8-3-1.

8-2-12. Brake Lining Replacement

Outline

Replacement
1. Remove the Reel Table Assembly
2. Remove the Brake Assembly
3. Remove the Brake Lining
4. Install the Brake Lining
5. Install the Brake Assembly
6. Install the Reel Table Assembly
Adjustment after Replacement
7. Confirm the Reel Table Height (Refer to Section 8-3-4.)
8. Confirm the Reel Brake Clearance (Refer to Section 8-3-5.)
9. Confirm the Reel Brake Release Amount (Refer to Section 8-3-6.)

Note

How to replace the brake lining assembly is the same on the supply and take-up sides.

Tools

- L-shaped wrench (1.5 mm): 7-700-736-05
- Cleaning cloth: 3-184-527-01
- Cleaning fluid: 9-919-573-01

Removal

1. **Remove the Reel Table Assembly**
   (1) Align one of the two notches at the bottom of the reel table assembly with the groove position of the reel shift plate assembly.
   (2) Insert the L-shaped wrench into the notch at the bottom of the reel table assembly along the groove of the reel shift plate.
   (3) Loosen the screw.
   (4) Align another notch at the bottom of the reel table assembly with the groove position of the reel shift plate assembly.
   (5) Loosen the screw in the same way as in step (2).
   (6) Remove the reel table assembly.

Caution

When the reel table assembly is removed, a poly-slider washer may adhere to it. In this case, remove the poly-slider washer from the reel table assembly and return it to the reel motor shaft position. This poly-slider washer is used for reel table height adjustment.

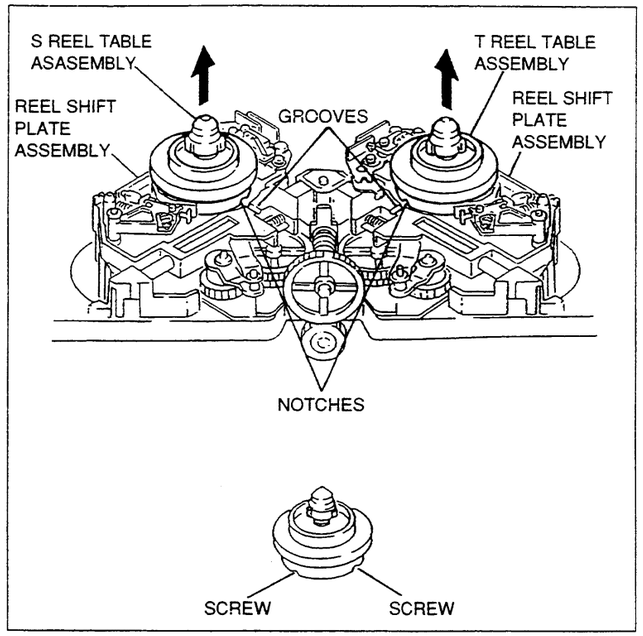

Remove the Reel Table Assembly

8-2-12. Brake Lining Replacement

2. **Remove the Brake Assembly**
   (1) Unhook the spring put on the reel shift plate assembly.
   (2) Remove the E ring, then remove the brake assembly.

3. **Remove the Brake Lining**
   Unhook the spring put on the brake arm block, then remove the brake lining.

Installation

4. **Install the Brake Lining**
   (1) Combine a new brake lining with the brake arm block as shown in the figure.
   (2) Hook the spring to the brake arm block.

5. **Install the Brake Assembly**
   (1) Pass the brake assembly through the shaft of the reel shift plate assembly.
   (2) Hook the spring to the reel shift plate assembly.
   (3) Fix the brake assembly by the E ring.

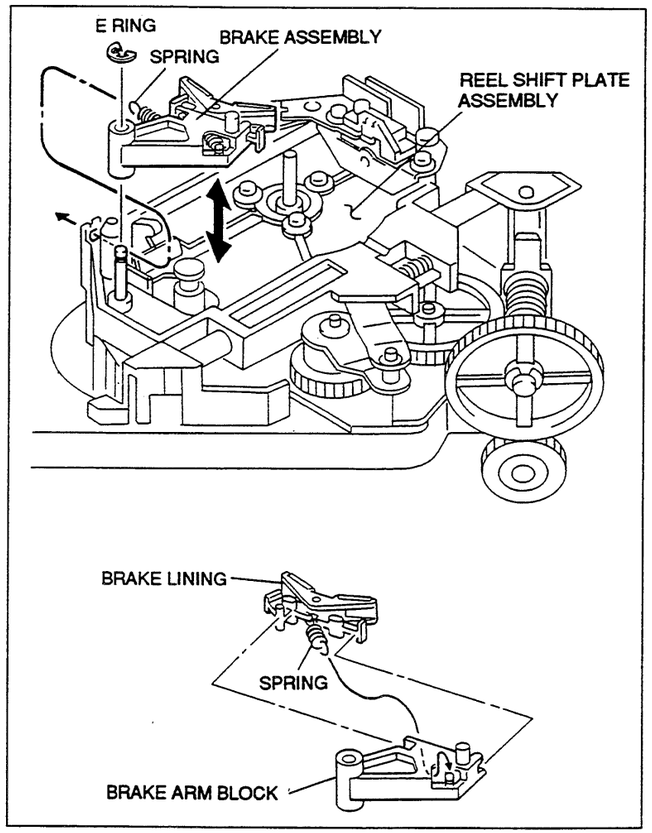

Remove/Install the Brake Lining

6. **Install the Reel Table Assembly**
   (1) Clean the reel table assembly along the circumference.
   (2) Release the reel brake in the direction indicated by the arrow and pass the reel table assembly through the reel motor shaft.

   Caution
   Tighten the two screws after the reel table height adjustment is completed.

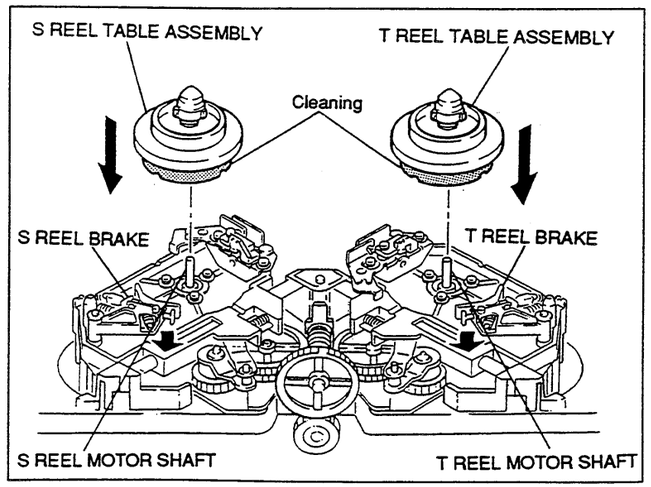

Install the Reel Table Assembly

Adjustment after Replacement

7. **Confirm the Reel Table Height**
   Refer to Section 8-3-4.

8. **Confirm the Reel Brake Clearance**
   Refer to Section 8-3-5.

9. **Confirm the Reel Brake Release Amount**
   Refer to Section 8-3-6.

8-2-13. Reel Motor Assembly Replacement

Outline

Replacement
1. Disconnect the Flat Cable (S side: CN321/DR-307, DR-200 Board, T side: CN322/DR-307, DR-200 Board)
2. Remove the Reel Table Assembly
3. Remove the Crank Arm and Slide Shaft Holder
4. Remove the Reel Shift Plate Assembly
5. Disconnect the Flat Cable (S side: CN923/RM Board, T side: CN923/RM Board)
6. Disconnect the Connector (S side: CN926 and 927/RM Board, T side: CN926 and 927/RM Board)
7. Remove the Reel Motor Assembly
8. Cleaning
9. Install the Reel Motor Assembly
10. Connect the Flat Cable (S side: CN923/RM Board, T side: CN923/RM Board)
11. Connect the Connector (S side: CN926 and 927/RM Board, T side: CN926 and 927/RM Board)
12. Install the Slide Shaft
13. Install the Reel Shift Plate Assembly
14. Smear Grease to the Slide Shaft
15. Install the Crank Arm
Adjustment after Replacement
16. Confirm the Reel Motor Shaft Slantness (Refer to Section 8-3-2.)
17. Install the Reel Table Assembly
18. Confirm the Cassette Pillar Height (Refer to Section 8-3-3.)
19. Confirm the Reel Table Height (Refer to Section 8-3-4.)
20. Connect the Flat Cable (S side: CN321/DR-307, DR-200 Board, T side: CN322/DR-307, DR-200 Board)
21. Confirm the Reel Brake Clearance (Refer to Section 8-3-5.)
22. Confirm the Reel Brake Release Amount (Refer to Section 8-3-6.)
23. Confirm the Reel Motor Operation (Refer to Section 5-2.) (C010 : S REEL MOTOR/ C011 : T REEL MOTOR)
24. Adjust the Reel FG Duty (Refer to Section 5-7.) (A001 : S REEL FG DUTY / A002 : T REEL FG DUTY)
25. Adjust the Reel Offset/Friction (Refer to Section 5-7.) (A004 : S REEL OFFSET/FRIC / A005: T REEL OFFSET/FRIC)
26. Adjust the Reel Torque (Refer to Section 5-7.) (A006 : S REEL TORQUE/A007 : T REEL TORQUE)
27. Store the Adjustment Data (Refer to Section 5-7.) (A012 : NV-RAM CONTROL)

Note

The parts consisting reel motor is different between S side and T side. However, how to replace the reel motor assembly is the same for both sides.

Tools

- L-shaped wrench (1.5 mm): 7-700-736-05
- Torque screwdriver (12 kg · cm)(JB-5252): J-6252-520-A
- Torque screwdriver's bit (+ 3 mm, l=90 mm): J-6323-430-A
- Grease (SGL-505): 7-662-010-04
- Oil: 7-661-018-18
- Cleaning cloth: 3-184-527-01
- Cleaning fluid: 9-919-573-01

Removal

1. **Disconnect the Flat Cable**
   (1) Place the unit with the left side panel down.
   (2) Disconnect the flat cable connected with DR-307/200 board.
   S side: CN321
   T side: CN322
   (3) Place the unit to the horizontal position.

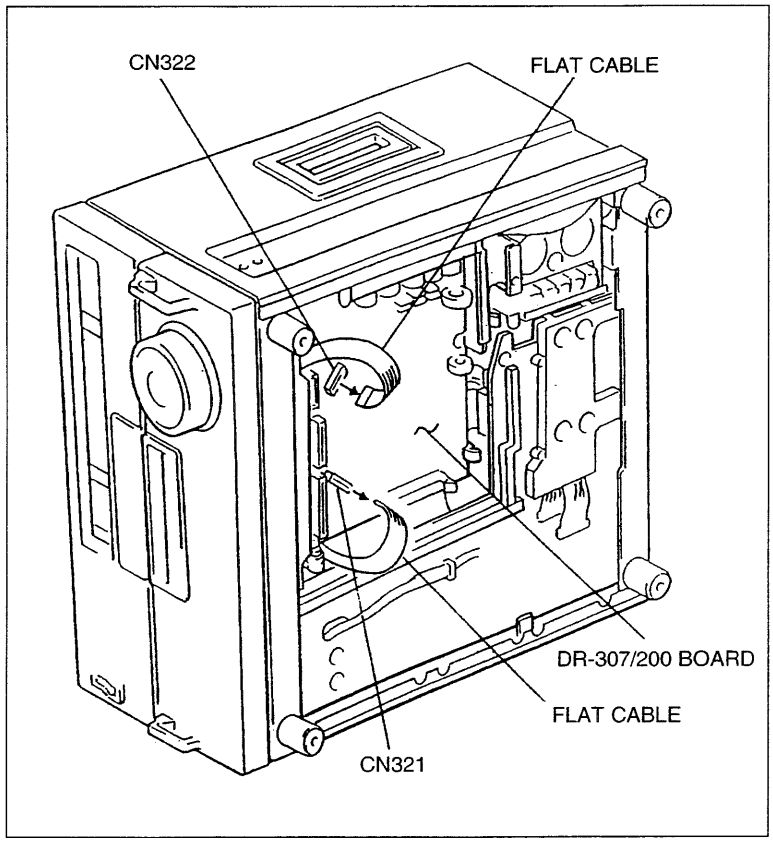

Disconnect the Flat Cable

2. Remove the Reel Table Assembly

(1) Align one of the two notches at the bottom of the reel table assembly with the groove of the reel shift plate assembly.
(2) Insert the L-shaped wrench into the notch of the reel table assembly along the groove of the reel shift plate.
(3) Loosen the screw.
(4) Align another notch of the reel table assembly with the groove of the reel shift plate assembly.
(5) Loosen the screw in the same way as in step (2).
(6) Remove the reel table assembly.

Caution

When the reel table assembly is removed, a poly-slider washer may adhere to it. In this case, remove that from the reel table assembly and return it to the reel motor shaft position. This poly-slider washer is used for reel table height adjustment.

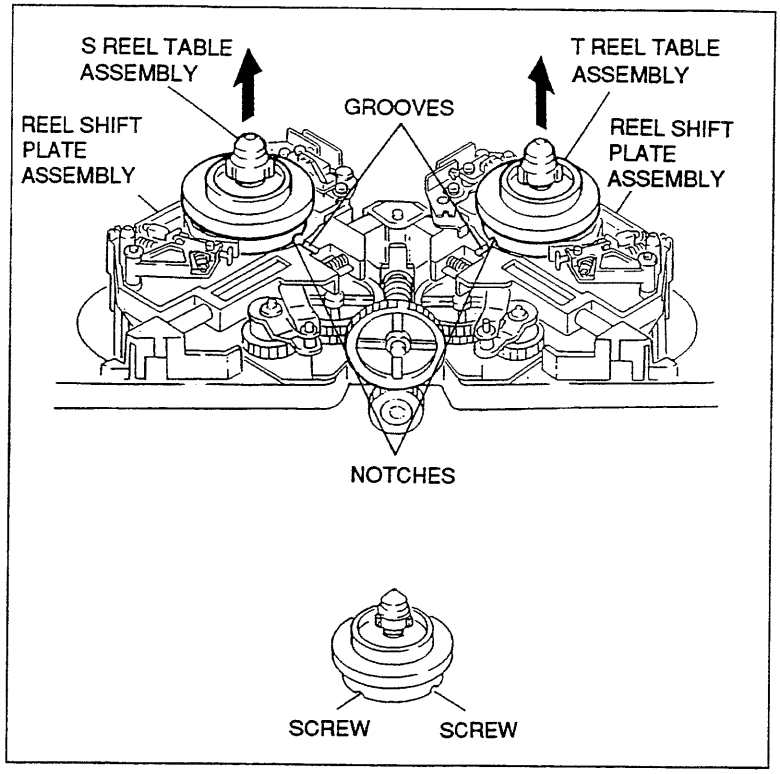

Remove the Reel Table Assembly

3. Remove the Crank Arm and Slide Shaft Holder

(1) Place the reel shift plate assembly in the intermediate position of S and L cassette.

Note: The reel shift plate assembly cannot be removed in the S cassette position or T cassette position.

(2) Remove an E ring and remove the crank arm (B).
(3) Remove the screw and remove the slide shaft holder.

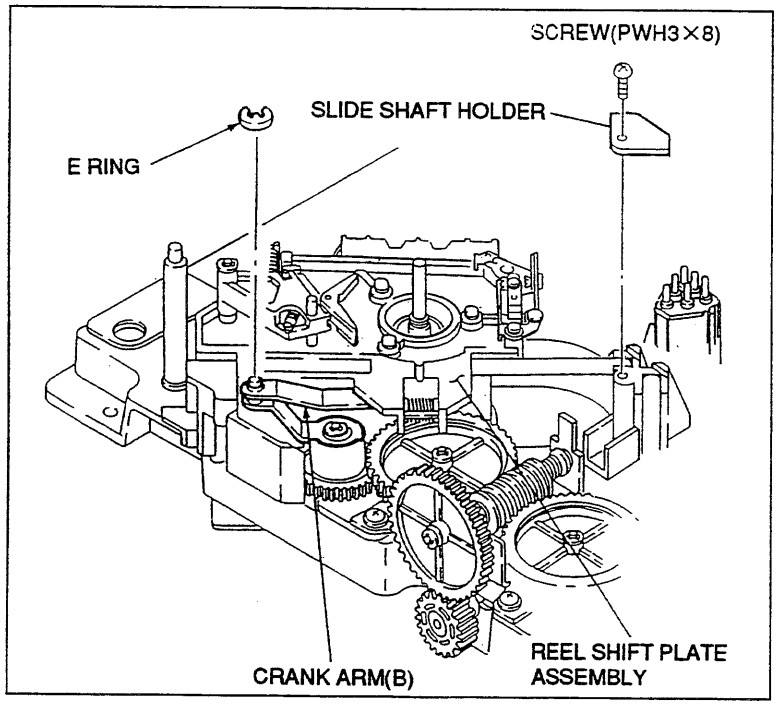

Remove the Crank Arm and Slide Shaft Holder

4. **Remove the Reel Shift Plate Assembly**
   While pulling out the slide shaft and remove the reel shift plate assembly.

   Caution
   1. Be careful not to adhere grease smeared the slide shaft to another parts.
   2. Be careful not to cause damage to the slide shaft during removal.

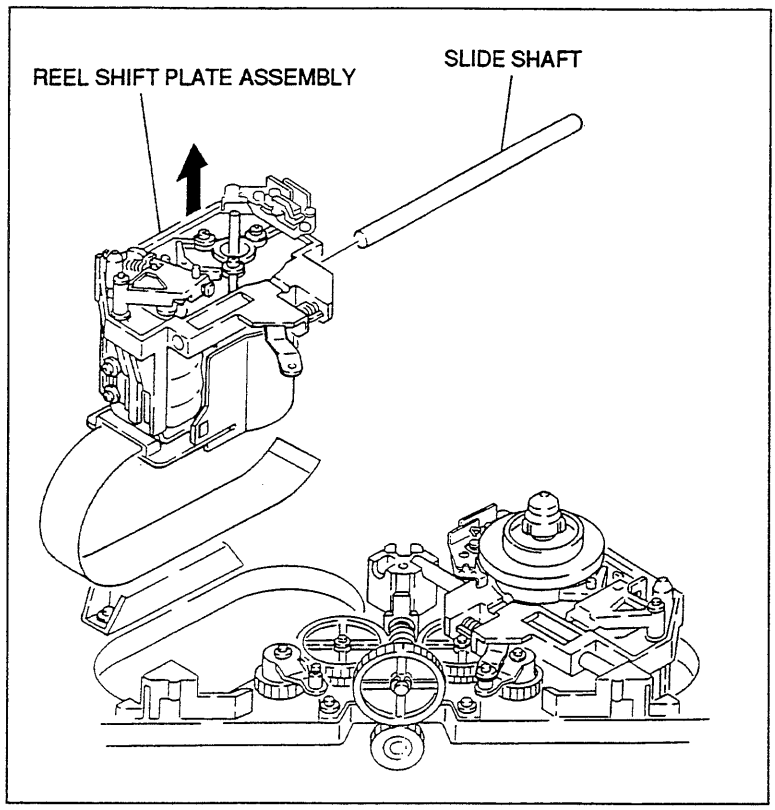

Remove the Reel Shift Plate Assembly

5. **Disconnect the Flat Cable**
   Disconnect the flat cable connected with RM board.

6. **Disconnect the Connectors**
   Disconnect the two connectors CN926 and CN927 on the RM board.

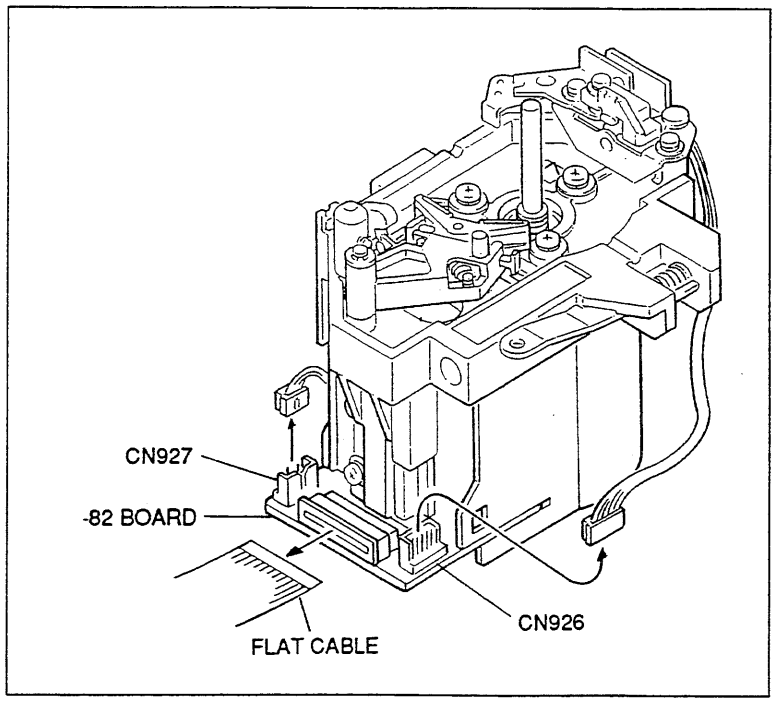

Disconnect the Flat Cable and Connectors

7. **Remove the Reel Motor Assembly**
   (1) Remove the three screws and shield cover, then remove the reel motor assembly.

   Caution
   1. The shield cover is not required for DVW-500P/510P/500/510.
   2. The spacer is inserted between the reel motor and the reel shift plate assembly. Be careful not to lose this spacer since it comes off with the reel motor assembly.

   (2) Remove the poly-slider washer from the reel motor shaft.

   Caution
   Confirm the quantity of the spacer and be careful not to lose it.

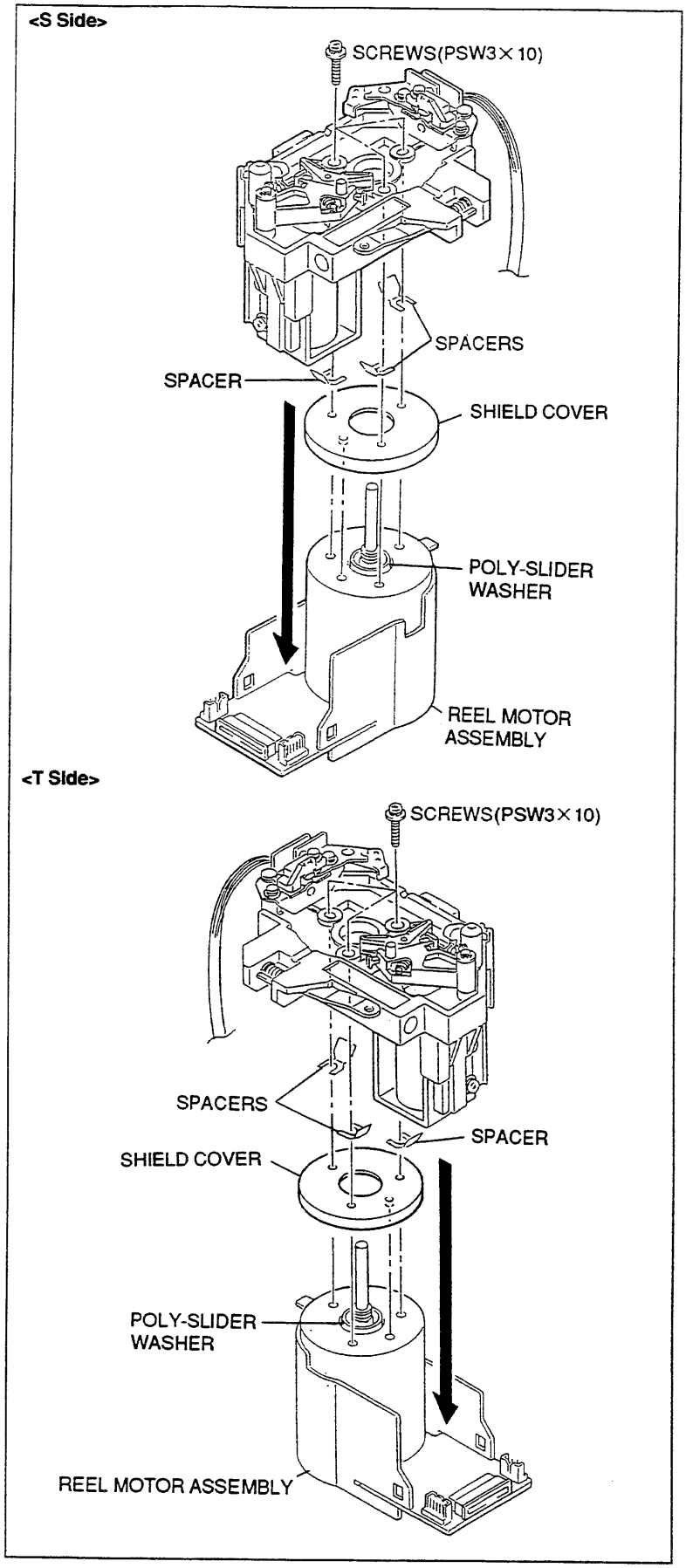

Remove the Reel Motor Assembly

Installation

8. Cleaning

(1) Clean the reel motor assembly mounting surface and reel shift plate assembly mounting surface with a cleaning cloth moistened with cleaning fluid.

(2) Clean the shield cover mounting surface with a cleaning cloth moistened with cleaning fluid. (This step is required only DVW-A500P/A510P/A500/A510.)

9. Install the Reel Motor Assembly

(1) Pass the shield cover through the reel motor shaft and align the pin of the shield cover with the hole of the reel motor. (This step is required only DVW-A500P/A510P/A500/A510.)

(2) Pass the reel motor assembly through the hole of the reel shift plate as in the direction shown in the figure.

(3) Tighten the three screws gradually while moving the reel motor assembly in the direction indicated by the arrow A.

Tightening torque: 68.6×10^{-2} N • m (7 kgf • cm)

(4) Pass the poly-slider washer removed in (2) of step 7 through the reel motor shaft.

10. Connect the Flat Cable

(1) Clean the insertion of the flat cable with a cleaning cloth moistened with cleaning fluid.

(2) Connect the flat cable disconnected in step 5 into the connector on the RM board, then lock.

Caution

1. Connect the flat cable with its printing surface upside.
2. Be careful not to twist the flat cable when connecting it.

11. Connect the Connector

Connect the two connectors CN926 and CN927 on the RM board.

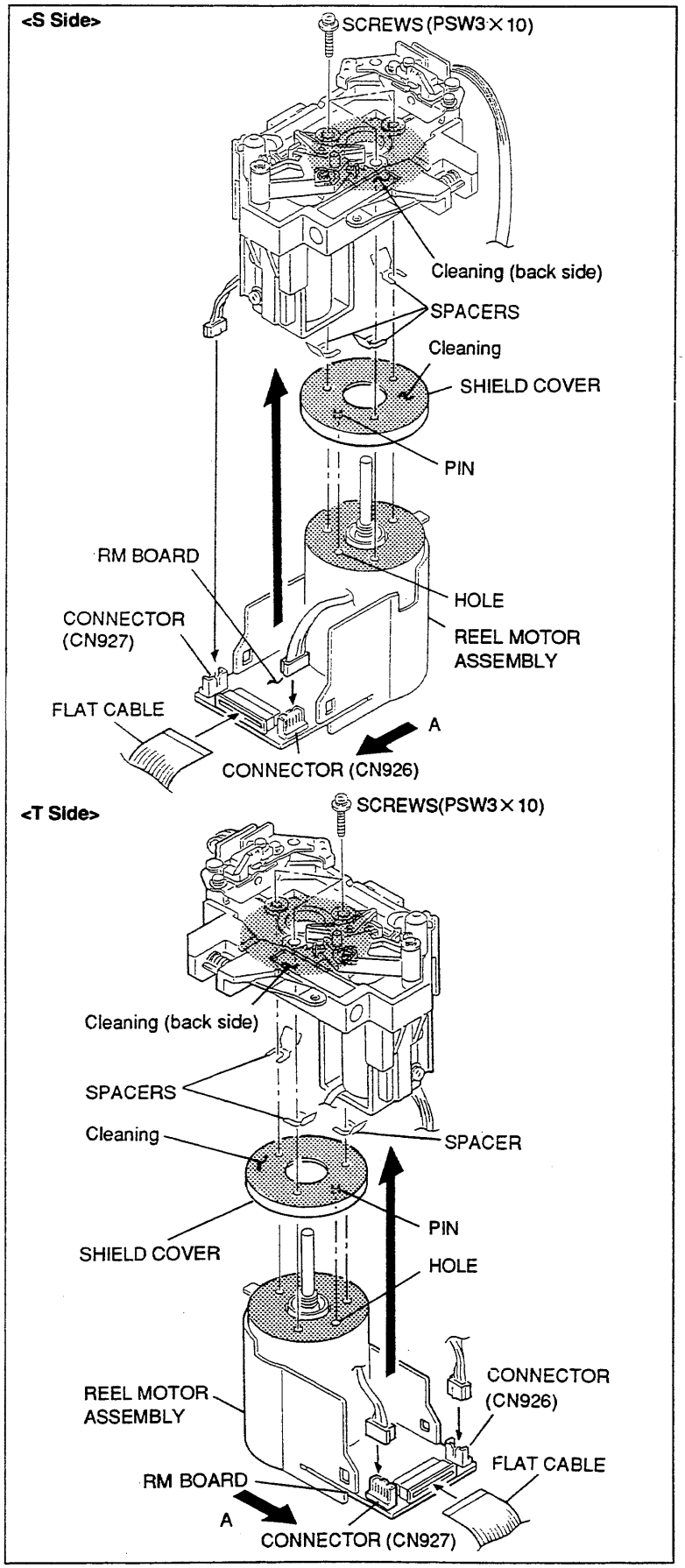

Install the Reel Motor Assembly

12. Install the Slide Shaft

(1) Wipe grease from the two holes where the slide shaft to be inserted of the reel shift plate assembly, then clean them.
(2) Wipe grease from the slide shaft removed in step 4, then clean it.
(3) Insert the slide shaft to the reel shift plate assembly.

13. Install the Reel Shift Plate Assembly

(1) Put the slide shaft on the shaft holder while inserting the portion A shown in the figure of the reel shift plate into the slide table.
(2) Install the slide shaft holder.

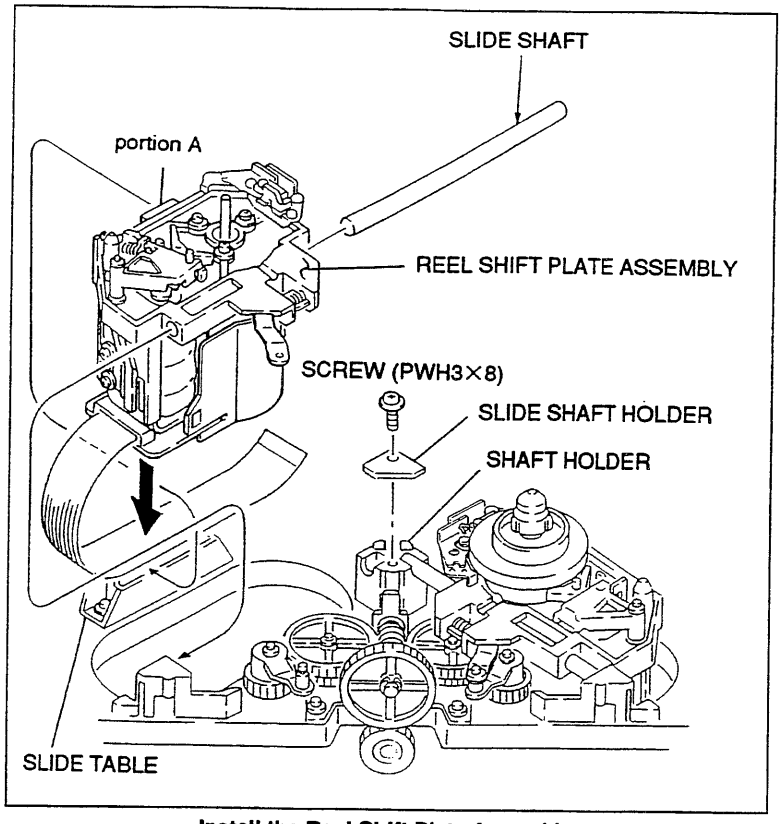

Install the Reel Shift Plate Assembly

14. Smear Grease to the Slide Shaft

(1) Smear grease very lightly to the slide shaft.
(2) Confirm that the reel shift plate assembly moves smoothly when moving it by hand towards S cassette and L cassette positions.

15. Install the Crank Arm

(1) Clean the shaft of the crank arm (A), then pour a drop of oil on it.
(2) Confirm that the reel shift plate assembly is in the intermediate position of S and L cassettes.

Caution

When installing the crank arm, place the reel shift plate assembly in the intermediate position of S and L cassettes for phase adjustment of the gears.

(3) Install the crank arm (B) to the shaft of the crank arm (A) with an E ring.

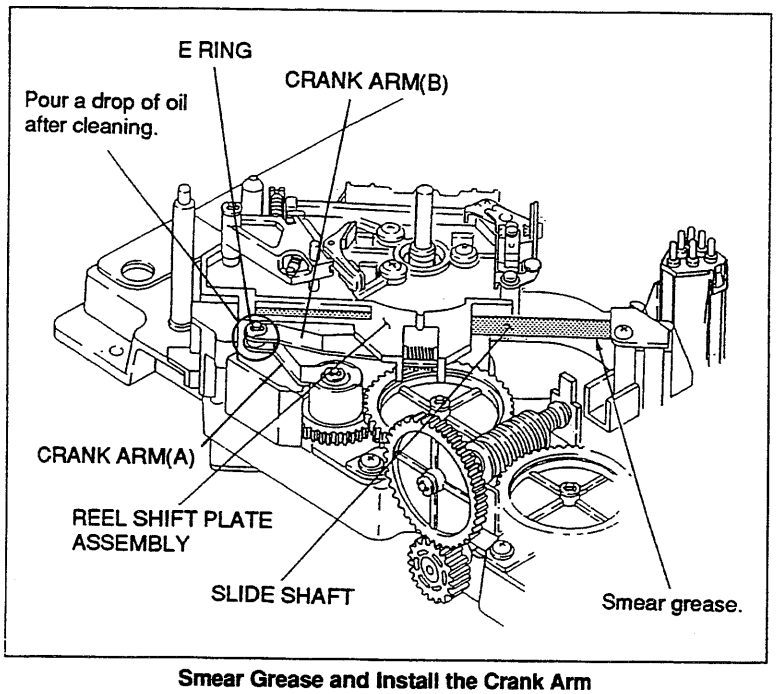

Smear Grease and Install the Crank Arm

Adjustment after Replacement

16. Confirm the Reel Motor Shaft Slantness
Refer to Section 8-3-2.

17. Install the Reel Table Assembly
(1) Clean the circumference of the reel table assembly with a cleaning cloth moistened with cleaning fluid.
(2) Pass the reel table assembly through the reel motor shaft while moving the reel brake in the direction indicated by the arrow.

Caution
Tighten two fixing screws after the adjustment of reel table height.

18. Confirm the Cassette Pillar Height
Refer to Section 8-3-3.

19. Confirm the Reel Table Height
Refer to Section 8-3-4.

20. Connect the Flat Cable
(1) Place the unit with the left side panel down.
(2) Connect the flat cable into the connector on the DR-307/200 board.
S side: CN321
T side: CN322
(3) Place the unit to the horizontal position.

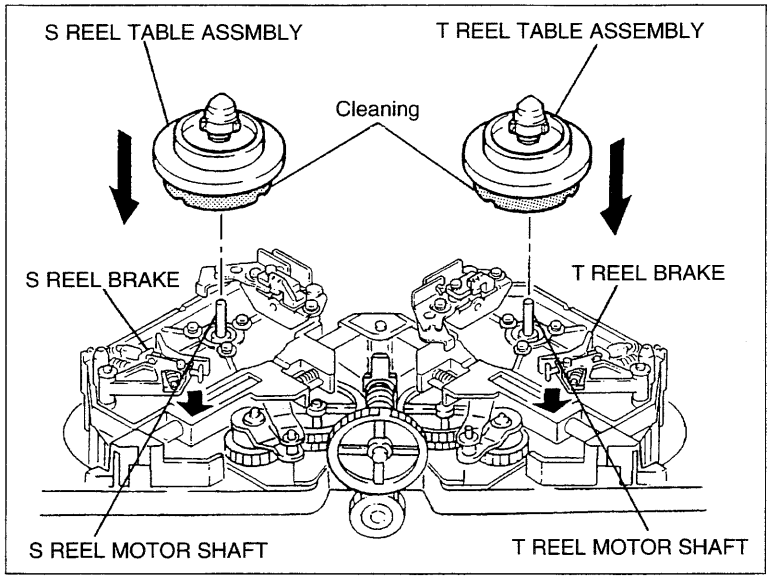

Install the Reel Table Assembly

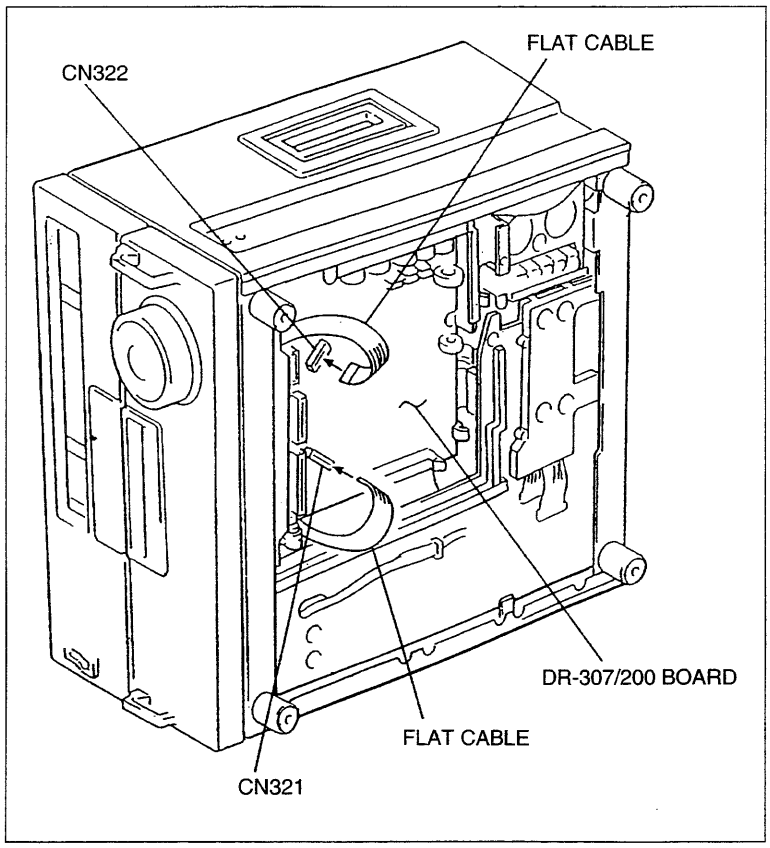

Connect the Flat Cable

21. Confirm the Reel Brake Clearance
Refer to Section 8-3-5.

22. Confirm the Reel Brake Release Amount
Refer to Section 8-3-6.

23. Confirm the Reel Motor Operation
Refer to Section 5-2. (C010 : S REEL MOTOR/ C011 : T REEL MOTOR)

24. Adjust the Reel FG Duty
Refer to Section 5-7. (A001 : S REEL FG DUTY / A002 : T REEL FG DUTY)

25. Adjust the Reel Offset/Friction
Refer to Section 5-7. (A004 : S REEL OFFSET/FRIC / A005: T REEL OFFSET/ FRIC)

26. Adjust the Reel Torque
Refer to Section 5-7. (A006 : S REEL TORQUE/A007 : T REEL TORQUE)

27. Store the Adjustment Data
Refer to Section 5-7. (A012 : NV-RAM CONTROL)

8-2-14. Fan Motor Replacement

Outline

Replacement
1. Disconnect the Connectors (CN150/MB-441 Board, Switching Regulator)
2. Remove the Fan Motor
3. Install the Fan Motor
4. Connect the Connectors (CN150/MB-441 Board, Switching Regulator)

Note

Adjustment after the fan motor replacement is not required.

Removal

1. **Disconnect the Connectors**
   Disconnect the connectors of the switching regulator and connector CN150 on the MB-441 board.

2. **Remove the Fan Motor**
   Remove the screws, then remove the fan motor.

Installation

3. **Install the Fan Motor**
   Install a new fan motor with screws.

   Caution
   1. Install the fan motor in position send the air out.
   2. The fan motors on the switching regulator side and connector panel differ in the type and number of fixing screws.
      - Fan motor on switching regulator side: PSW4x30 (4 pcs)
      - Fan motor on connector panel: BVTT3x30 (2 pcs)

4. **Connect the Connectosrs**
   Connect the connectors into connector CN150 on the MB-441 board and the switching regulator.

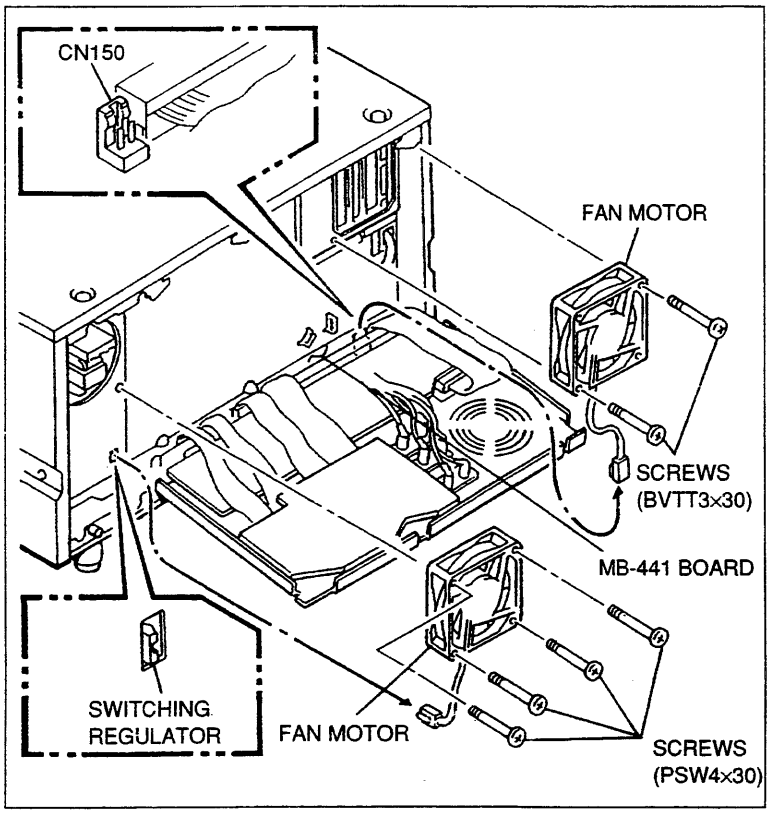

Remove/Install the Fan Motor

8-2-15. Filter Replacement

Outline

Replacement
1. Remove the Cap
2. Replace the Filter
3. Install the Cap

Note

Adjustment after the filter replacement is not required.

Replacement

1. **Remove the Cap**
   Turn the cap counterclockwise and remove it.

2. **Replace the Filter**
   Replace the dirty filter with a new one.

   Caution
   Be careful not to lose the washer, if it is inserted under the filter.

3. **Install the Cap**
   Turn the cap clockwise until it is clicked.

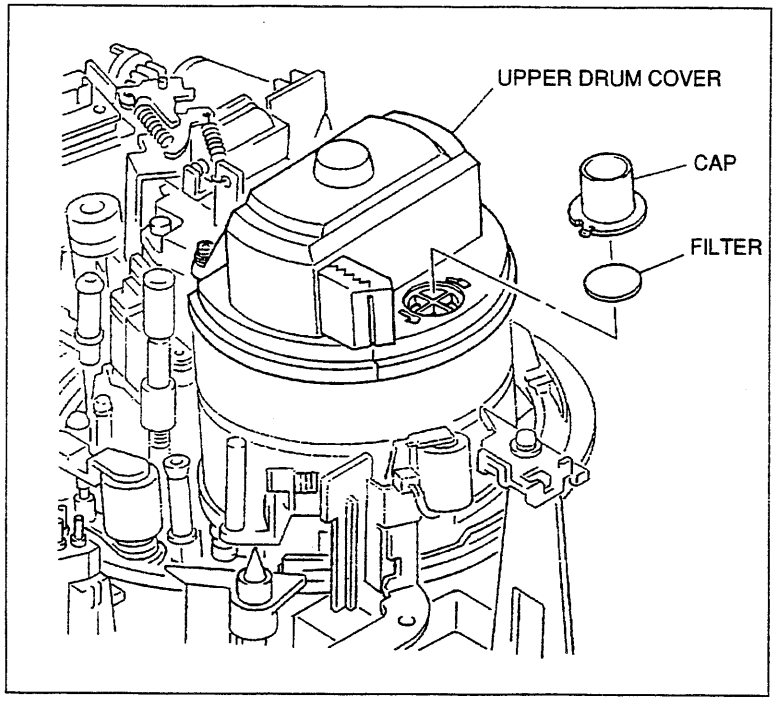

Remove/Install the Filter

8-3. MECHANICAL ADJUSTMENT

Index

Adjustment	Specification	Page
Pinch Press Clearance Adjustment	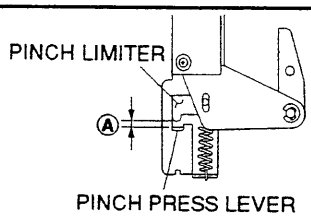 Spec.: Ⓐ=0.6 to 0.8 mm	8-73
Reel Motor Shaft Slantness Adjustment	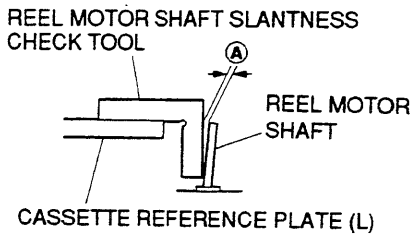 Spec. 1: (L cassette position) Ⓐ≦0.03 mm Spec. 2: (S cassette position) Ⓐ≦0.1 mm	8-75
Cassette Pillar Height Adjustment	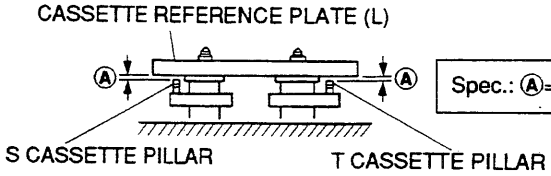 Spec.: Ⓐ= No clearance	8-77
Reel Table Height Adjustment	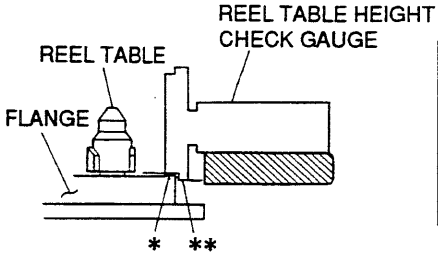 Spec.: The * marked portion of the gauge slide over the flange of the reel table. The ** marked portion of the gauge does not slide over.	8-79
Reel Brake Clearance Check	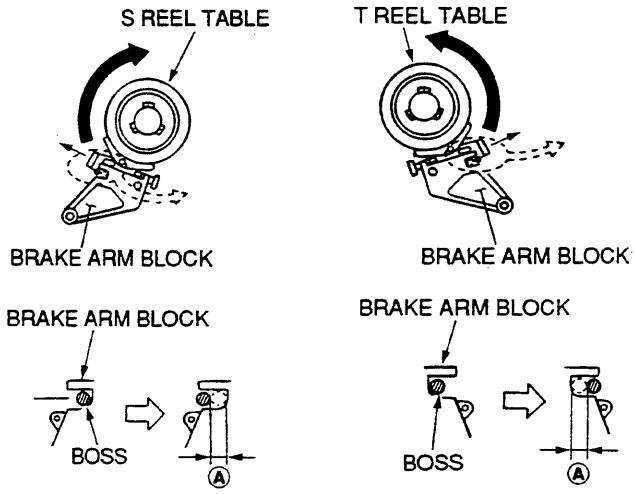 Spec.: Ⓐ= Clearance exists. Spec.: Ⓐ= Clearance exists.	8-83
Reel Brake Release Amount Adjustment	Spec. 1: The brake lining doesn't touch a reel table while reel table rotating.	8-85

8-3-1. Pinch Press Clearance Adjustment

Note

- Be sure to check the clearance during pinch press when the pinch press assembly is removed.

Tool

- Wire clearance check gauge set: J-6152-450-A

Check

1. **Put the Pinch Solenoid into the Energized State**
   (1) Turn the M gear of the gear box assembly manually, and put the unit into the threading end mode.
   (2) Press the iron core of the pinch solenoid in the direction of the fully energized state.

2. **Check the Pinch Press Clearance**
   Check that the clearance between the pinch limiter and pinch press lever satisfies the specification.

   If the specification is not satisfied, perform steps 3 and later.

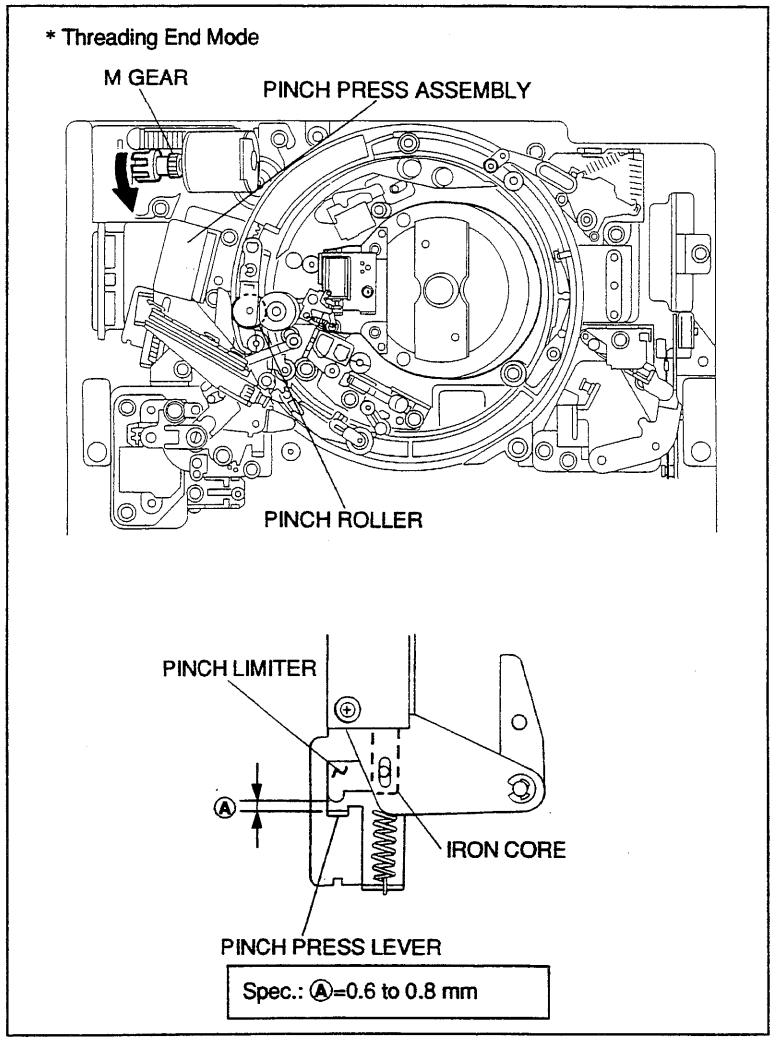

Pinch Press Clearance Check

Adjustment

3. **Loosen Screws**
   Loosen the two screws fixing the pinch press assembly by 1/2 to one turn.

4. **Adjust the Pinch Press Assembly Position**
   Put the pinch solenoid into the energized state, then insert the tip of a 3 mm flat-blade screwdriver into the notch of the pinch press assembly and adjust the pinch press assembly position so that the specification is satisfied.

5. **Tighten Screws**
   Tighten the two screws loosened in step 3.

6. **Recheck the Pinch Press Clearance**
   Refer to steps 1 and 2.

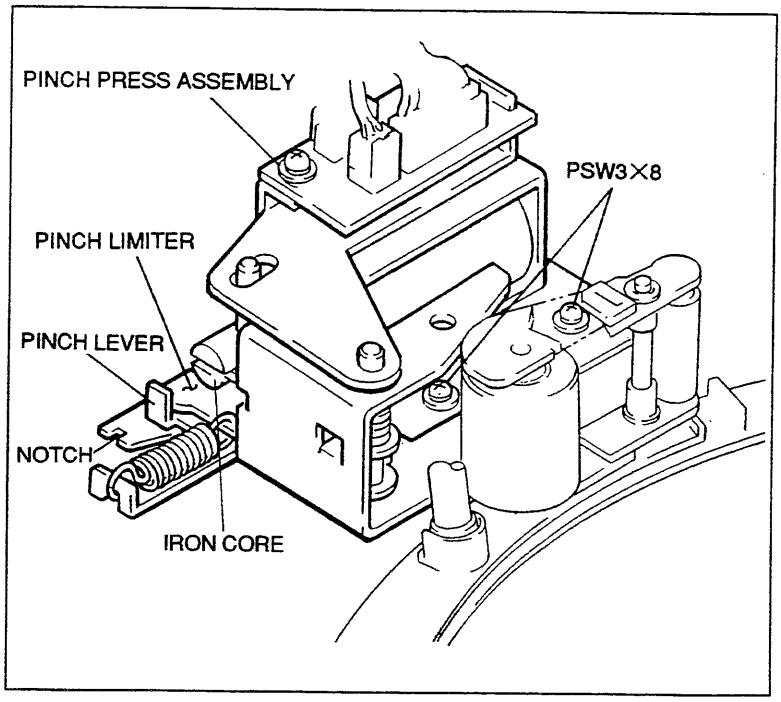

Pinch Press Clearance Adjustment

8-3-2. Reel Motor Shaft Slantness Adjustment

Notes

- Be sure to check the slantness of the reel motor shaft when the reel motor assembly is replaced or when the reel shift plate assembly is removed.
- Perform the reel motor shaft slantness adjustment correctly.
  If this adjustment is not performed correctly, a reel hub touches the case in a cassette tape, a noise occurs, and the tape does not run correctly. This may damage the tape.

Tools

- Cassette reference plate (L)(MW-088): J-6320-880-A
- Reel motor shaft slantness check tool (MW-087): J-6320-870-A
- Thickness gauge: 9-911-053-00
- Torque screwdriver (12 kg•cm) (JB-5252): J-6252-520-A
- Torque screwdriver's bit (+3 mm, l=50 mm): J-6323-430-A

Check

1. **Install the Cassette Reference Plate (L)**
   Place the cassette reference plate (L) in the direction shown in the figure, then place it on two cassette supports.

2. **Place the Reel Shift Plate Assembly in the L Cassette Position**
   Rotate the drive gear counterclockwise as far as it will go.

3. **Check the Slantness in the L Cassette Position**
   (1) Press the check tool against the reel motor shaft from the directions indicated by the arrow.
   (2) Check that the clearance between the reel motor shaft and tool satisfies specification 1.

   If the specification is not satisfied, perform steps 6 through 10.

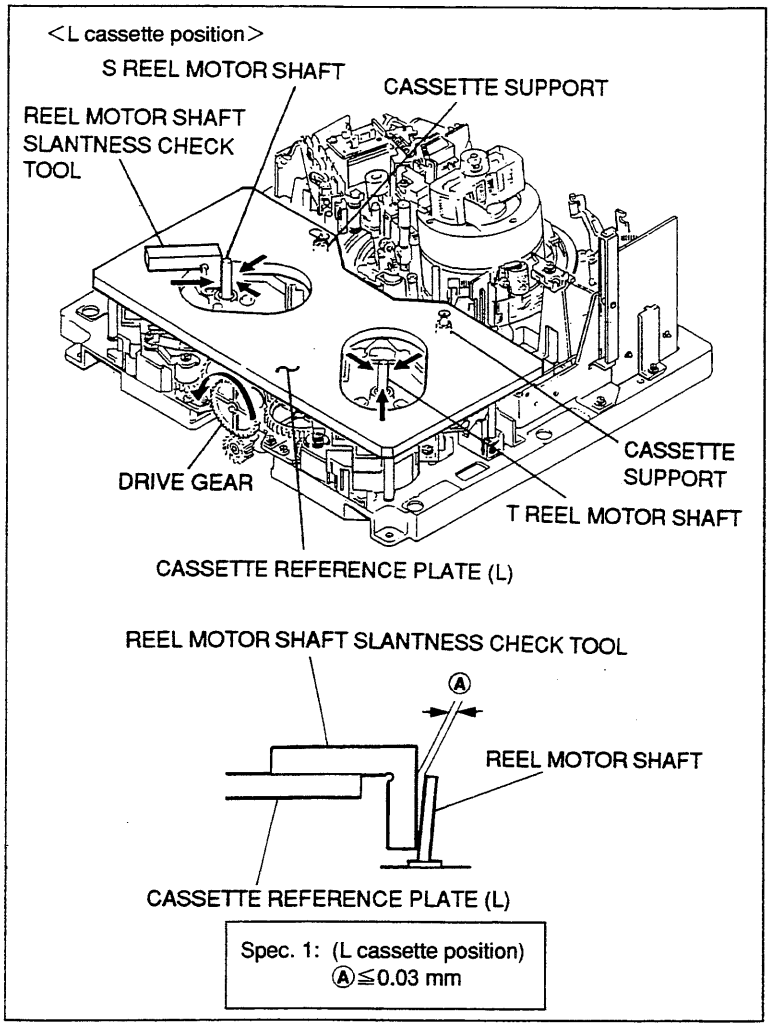

Reel Motor Shaft Slantness Check (L)

4. **Place the Reel Shift Plate Assembly in the S Cassette Position**
   Rotate the drive gear clockwise as far as it will go.

5. **Check the Slantness in the S Cassette Position**
   (1) Press the check tool against the reel motor shaft from the directions indicated by the arrow.
   (2) Check that the clearance between the reel motor shaft and tool satisfies specification 2.

   If the specification is not satisfied, perform steps 6 and later.

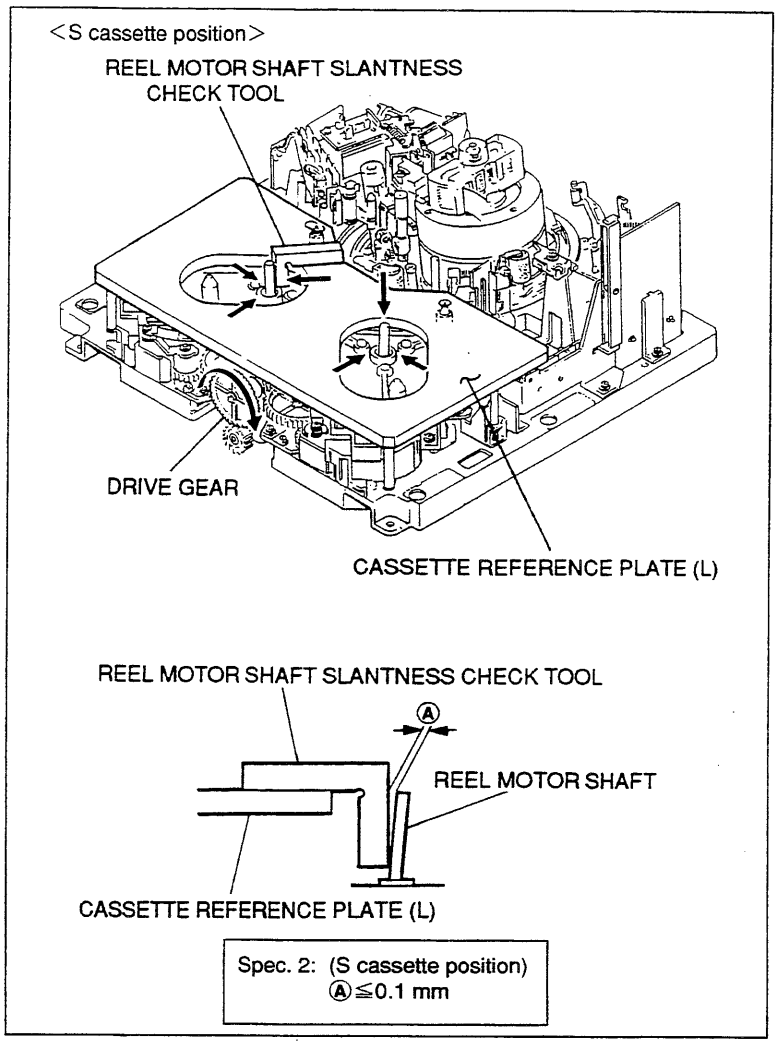

Reel Motor Shaft Slantness Check (S)

Adjustment

6. **Loosen Screws**
   Loosen the three screws fixing the reel motor by one to two turns.

7. **Bend Spacer**
   Bend the adjustment spacer as shown in the figure.

8. **Insert Spacer**
   Insert the adjustment spacer into the square hole on the upper surface of the reel shift plate assembly with tweezers.

9. **Tighten Screws**
   Gradually tighten the three screws loosened in step 6.

   Tightening torque: 68.6×10^{-2} N·m (7 kgf·cm)

10. **Recheck the Reel Motor Shaft Slantness**
    Refer to steps 2 through 5.

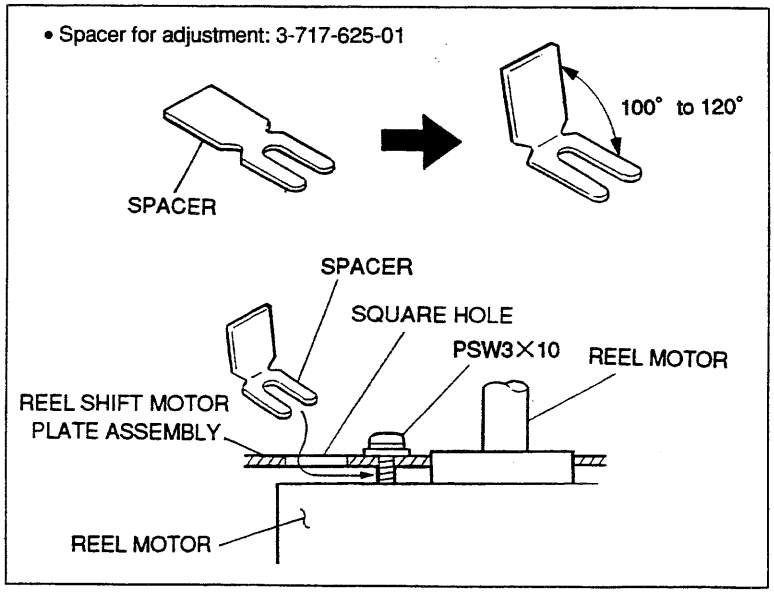

Reel Motor Shaft Slantness Adjustment

8-3-3. Cassette Pillar Height Adjustment (L Cassette)

DVW-A500 (UC)	: S/N 15993 and Higher
DVW-A500P (CE)	: S/N 17638 and Higher
DVW-500 (UC)	: S/N 12400 and Higher
DVW-500P (CE)	: S/N 14881 and Higher
DVW-A510 (UC)	: S/N 11154 and Higher
DVW-A510P (CE)	: S/N 13276 and Higher
DVW-510 (UC)	: S/N 10638 and Higher
DVW-510P (CE)	: S/N 11065 and Higher

Note

- Be sure to check the height of the cassette pillars when the reel shift plate assembly is removed.

Tools

- Cassette reference plate (L)(MW-088): J-6320-880-A
- Adjustment mirror (circular): J-6080-029-A
- L-shaped wrench (1.5 mm): 7-700-736-05

Check

1. **Install the Cassette Reference Plate (L)**
   Place the cassette reference plate (L) in the direction shown in the figure, then place it on two cassette supports.

2. **Place the Reel Shift Plate Assembly in the Intermediate Position of S and L Cassette**
   (1) Rotate the drive gear and place the reel shift plate assembly in the intermediate position of S and L cassettes.

   Note: The reel shift plate assembly should be moved to the position where the cassette pillars do not appear from the hole of the reference plate.

   (2) Check that the S and T cassette pillars are positioned under the reference plate.

3. **Check the Cassette Pillar Height**
   Push the three positions (a), (b), and (c) of the cassette reference plate (L) lightly toward the chassis and make sure that the clearance between the shaft cap and cassette reference plate satisfies the specification.

   If the specification is not satisfied, perform steps 4 through 6.

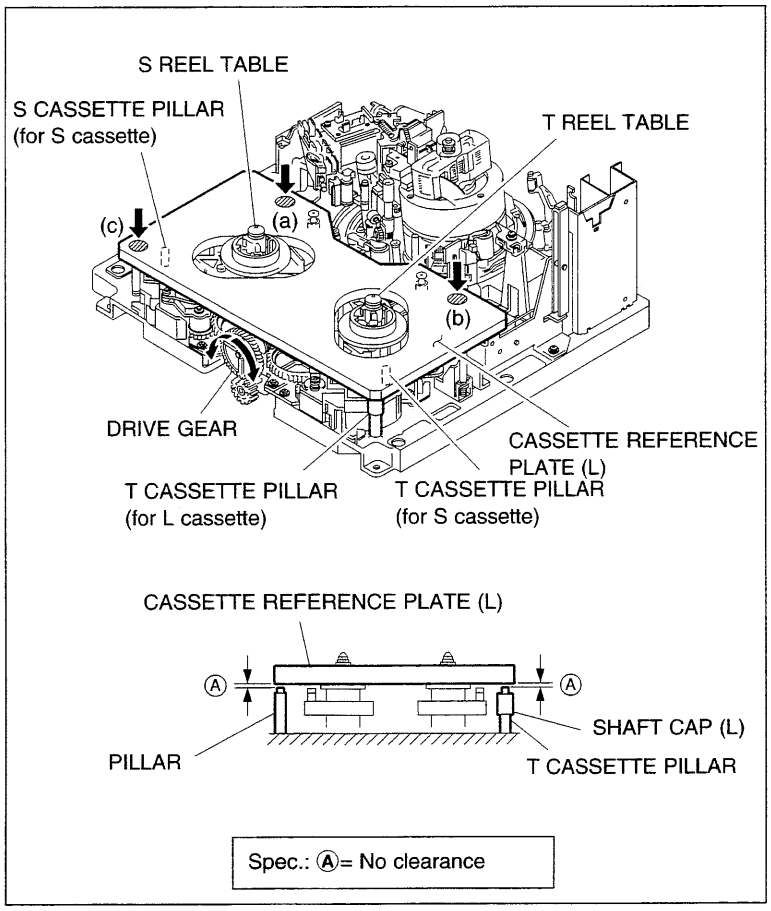

Cassette Pillar Height Check

Adjustment

4. **Loosen Fixing Screw**
   Loosen the fixing screw of the T cassette pillar by one or two turns with L-shaped wrench.

5. **Adjust the Cassette Pillar Height**
   Turn and adjust the shaft cap until the clearance is met the specification, then tighten the fixing screw.

   Tightening torque: 0.6 to 0.7 N•m (6 to 7 kgf•cm)

6. **Recheck the Cassette Pillar Height**
   Check that the height of the S and T cassette pillars satisfies the specification.

   Caution
   Shift the tightening position of the fixing screw when performing readjustment with the specification not satisfied. (Do not tighten the screw in the same position as previous.)

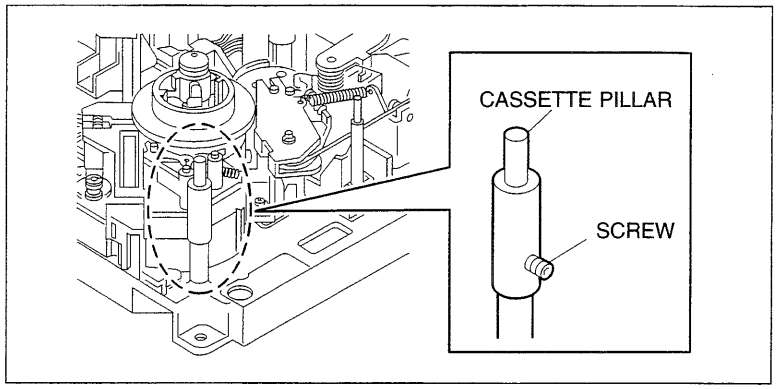

Cassette Pillar Height Adjustment

8-3-3. Cassette Pillar Height Adjustment (S Cassette)

Note

- Be sure to check the height of the cassette pillars when the reel shift plate assembly is removed.

Tools

- Cassette reference plate (L)(MW-088): J-6320-880-A
- Adjustment mirror (circular): J-6080-029-A
- L-shaped wrench (1.5 mm): 7-700-736-05

Check

1. **Install the Cassette Reference Plate (L)**
   Place the cassette reference plate (L) in the direction shown in the figure, then place it on two cassette supports.

2. **Place the Reel Shift Plate Assembly in the Intermediate Position of S and L Cassette**
   (1) Rotate the drive gear and place the reel shift plate assembly in the intermediate position of S and L cassettes.

   Note: The reel shift plate assembly should be moved to the position where the cassette pillars do not appear from the hole of the reference plate.

   (2) Check that the S and T cassette pillars are positioned under the reference plate.

3. **Check the Cassette Pillar Height**
   (1) Turn the reference plate over and place it on the cassette pillars.

   Note: The reference plate should be turned over because it has a concave portion at the back and cannot be adjusted correctly.

   (2) Check with an adjustment mirror that there are no clearances between the S and T cassette pillars and the reference plate.

   If the specification is not satisfied, perform steps 4 through 6.

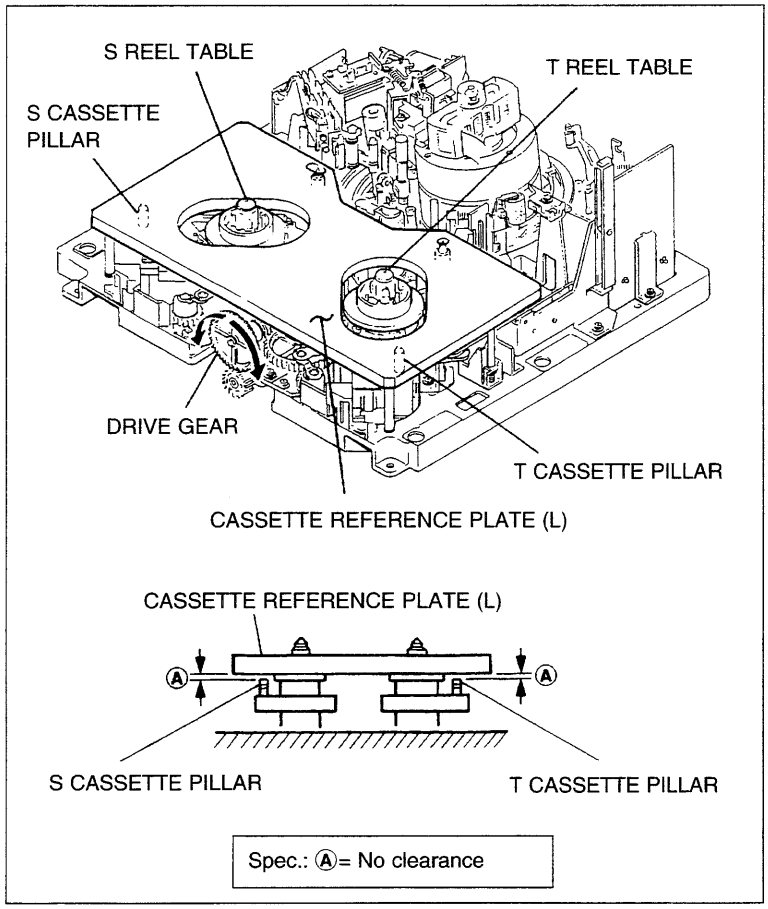

Cassette Pillar Height Check

Adjustment

4. **Loosen Fixing Screw**
   Loosen the fixing screw of the S or T cassette pillar by one to two turns.

5. **Adjust the Cassette Pillar Height**
   Lift the cassette pillars and press them slightly against the lower surface of the reference plate. Tighten the fixing screw under this condition.

6. **Recheck the Cassette Pillar Height**
   Check that the height of the S and T cassette pillars satisfies the specification.

Caution
Shift the tightening position of the fixing screw when performing readjustment with the specification not satisfied. (Do not tighten the screw in the same position as previous.)

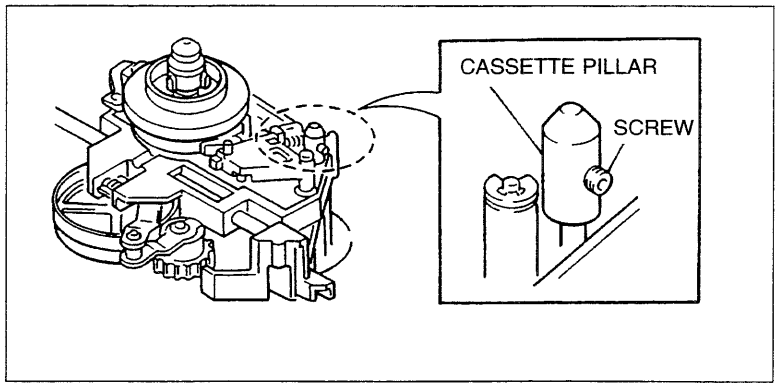

Cassette Pillar Height Adjustment

8-3-4. Reel Table Height Adjustment

Notes

- Be sure to check the height of the reel table when a reel table is removed.
- Perform the reel table height adjustment correctly.
  The height of the reel table is used as the reference for the tape path.
- After supply reel table height adjustment is performed, be sure to check the video tracking. (Refer to Section 8-4-3.)

Tools

- Cassette reference plate (L)(MW-088): J-6320-880-A
- Reel table height gauge (MW-935): J-6329-350-A
- L-shaped wrench (1.5 mm): 7-700-736-05

Check

1. **Install the Cassette Reference Plate (L)**
   Place the cassette reference plate (L) in the direction shown in the figure, then place it on two cassette supports.

2. **Place the Reel Shift Plate Assembly in the L Cassette Position**
   Rotate the drive gear counterclockwise as far as it will go.

3. **Check the Take-up Reel Table Height**
   (1) Press the "T"-stamped side of the gauge against the take-up reel table from the directions indicated by the arrow.
   (2) Check that the specification is satisfied while rotating the take-up reel table clockwise by one turn.

   If the specification is not satisfied, perform steps 7 and 8.

4. **Check the Supply Reel Table Height**
   (1) Press the "S"-stamped side of the gauge against the supply reel table from the directions indicated by the arrow.
   (2) Check that the specification is satisfied while rotating the supply reel table counter-clockwise by one turn.

   If the specification is not satisfied, perform steps 7 and 8.

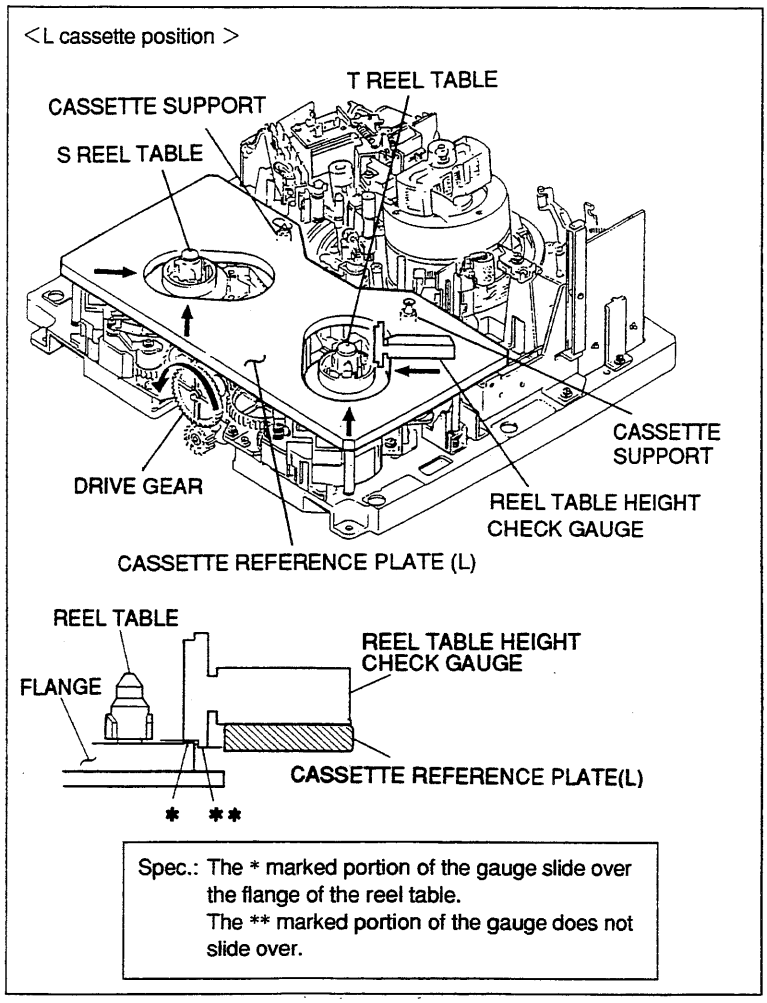

Reel Table Height Check (L)

5. **Place the Reel Shift Plate Assembly in the S Cassette Position**
   Rotate the drive gear clockwise as far as it will go.

6. **Chek the Supply and Take-up Reel Table Height**
   Perform in the same way as in steps 3 and 4.

   If the specification is not satisfied, perform steps 7 and later.
   If the specifications are satisfied in both the L and S cassette positions, perform steps 9 and later.

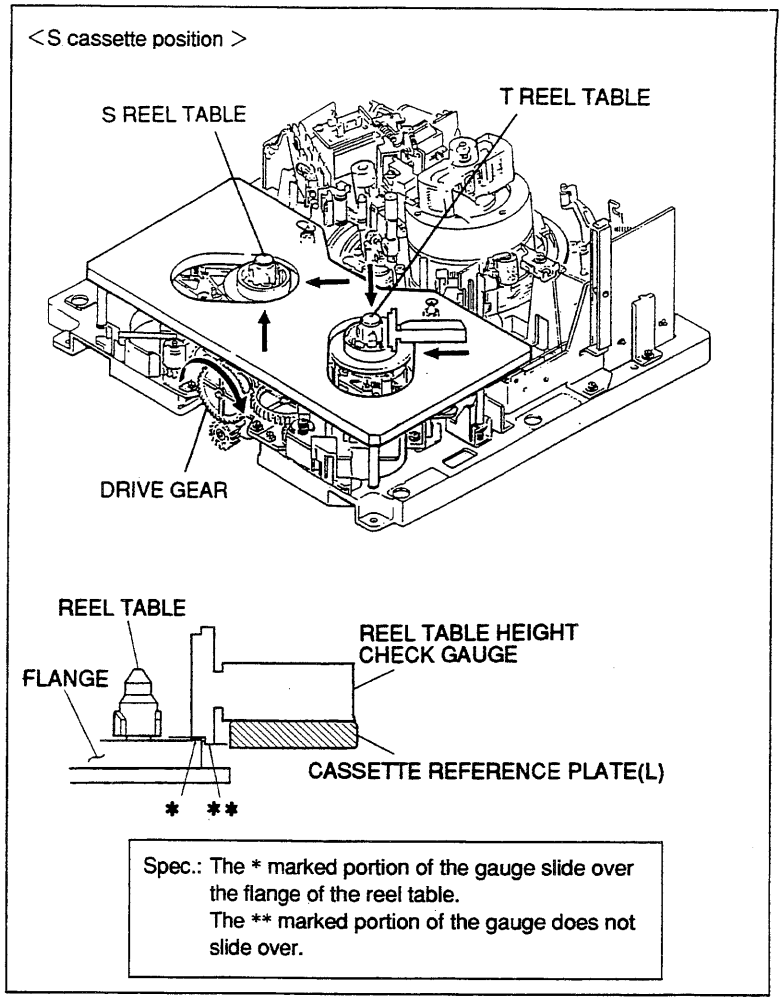

Reel Table Height Check (S)

Adjustment

7. **Remove the Reel Table**

8. **Adjust the Number of Poly-slider Washers**
   Adjust the number of poly-slider washers installed in the reel motor shaft so that the specifications are satisfied in both the L and S cassette positions.

9. **Remove the Cassette Reference Plate (L)**
   Remove the cassette reference plate (L) and reel table height gauge.

10. **Tighten the Screws of the Reel Table Assembly**
    (1) Align the notch at the bottom of the reel table assembly with the groove position of the reel shift plate assembly.
    (2) Insert an L-shaped wrench into the notch at the bottom of the reel table assembly along the groove of the reel shift plate and tighten the two screws.

11. **Recheck the Reel Table Height**
    Refer to steps 2 through 6.

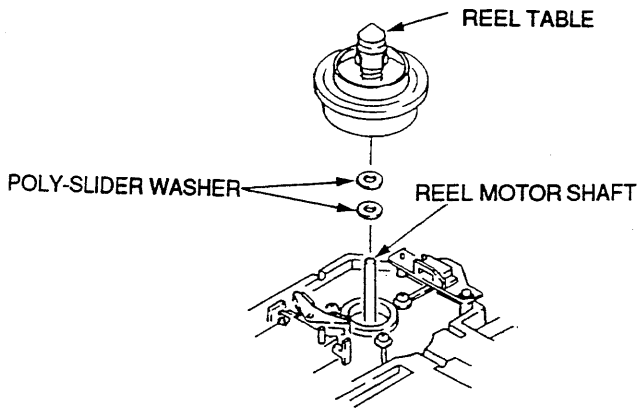

• Poly-slider washer for adjustment

Diameter	Thickness	Part No.
4 mm	0.05mm	3-188-108-01
	0.13 mm	3-701-441-01
	0.25 mm	3-701-441-11
	0.5mm	3-701-441-21

Reel Table Height Adjustment

8-3-5. Reel Brake Clearance Check

Note

- Be sure to check clearance of the reel brake when the brake lining assembly is replaced or when the reel table assembly is removed.

Check

1. **Check the Take-up Reel Brake Clearance**
   Rotate the take-up reel table counterclockwise by fingers.
   At that time, check that a clearance occurs between the brake arm block and boss.

   If no clearance occurs, replace the brake lining. (Refer to Section 8-2-12.)

2. **Check the Supply Reel Brake Clearance**
   Rotate the supply reel table clockwise by fingers.
   At that time, check that a clearance occurs between the brake arm block and boss.

   If no clearance occurs, replace the brake lining. (Refer to Section 8-2-12.)

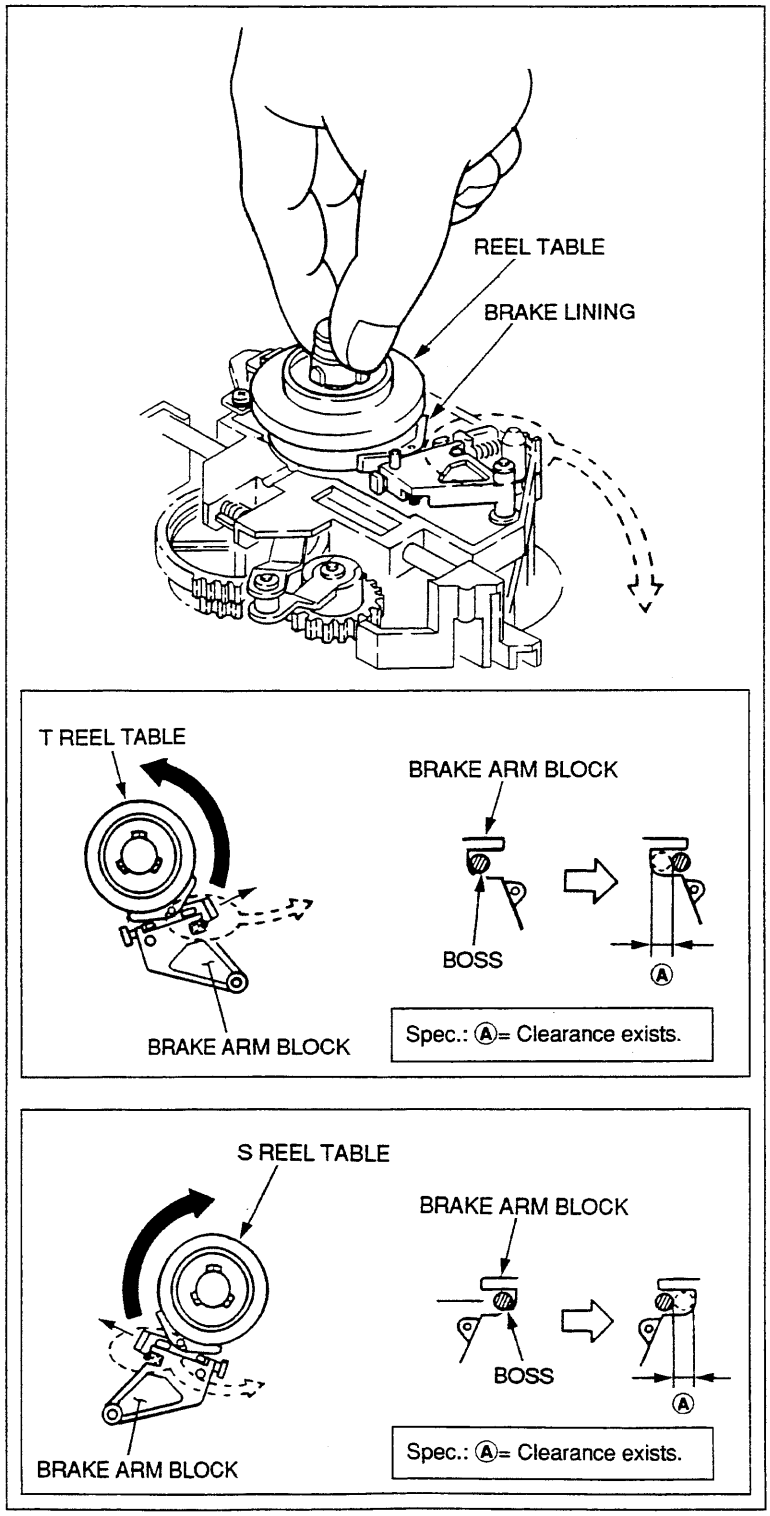

Reel Brake Clearance Check

8-3-6. Reel Brake Release Amount Adjustment

Notes

- Be sure to check the release amount of the reel brake when the brake lining assembly is replaced or when the reel table assembly is removed.
- Be sure to check the following when performing adjustment with the specification not satisfied.
  (1) Cassette pillar height check (Refer to Section 8-3-3.)
  (2) Reel table height check (Refer to Section 8-3-4.)

Basic knowledge

The brake lining is pressed against the reel table when the power is off.
When the power is turned on, the brake lining is released.
In the PLAY, STOP, REW, F FWD, SEARCH, and REV modes, the brake lining remains released.
Press the EJECT button to put the unit into the EJECT mode. The brake lining is pressed against the reel table a few seconds after the EJECT mode is completed.

Tool

- Wire clearance check gauge set: J-6152-450-A

Check

1. **Turn the Power On**

2. **Check the Brake Release Amount**
   Check on the supply and take-up sides that the brake lining does not touch the reel table while a reel table is rotating. (Specification 1)

   If specification 1 is not satisfied, perform steps 3 and later.

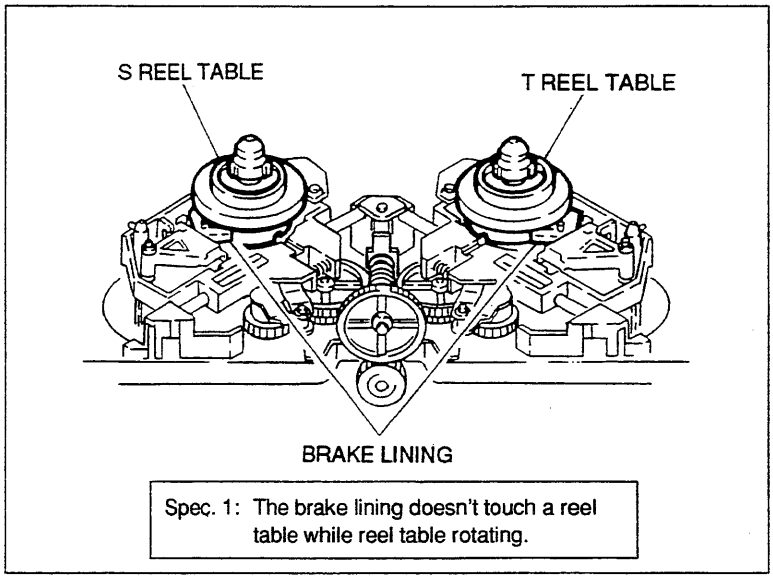

Reel Brake Release Amount Check

Adjustment

3. **Turn the Power Off**

4. **Remove the Reel Shift Plate Assembly**
   Refer to steps 1 through 4 in Section 8-2-13.
   (It is not necessary to remove a reel table.)

5. **Loosen the Screws Fixing the Brake Solenoid**
   Loosen the two screws fixing the brake solenoid.

6. **Adjust the Brake Solenoid Position**
   Press down the iron core of the brake solenoid to the energized position.
   At that time, adjust the brake solenoid position so that the clearance between the brake lining and reel table satisfies specification 2.

   Note
   Press down only the iron core by a sharp-pointed stick.
   Do no touch other portions.

   Know-how:
   - Shift the brake solenoid upward.
     →Clearance A is narrowed.
   - Shift the brake solenoid downward.
     →Clearance A is widened.

7. **Tighten the Screws Fixing the Brake Solenoid**
   Tighten the two screws loosened in step 5.

8. **Recheck the Brake Release Amount**
   Refer to step 6.

9. **Install the Reel Shift Plate Assembly**
   Refer to steps 12 through 22 in Section 8-2-13.
   (It is not necessary to smear grease again to the slide shaft or to apply oil again to the crank arm (A).)

10. **Check the Cassette Pillar Height**
    Refer to Section 8-3-3.

11. **Check the Reel Table Height**
    Refer to Section 8-3-4.

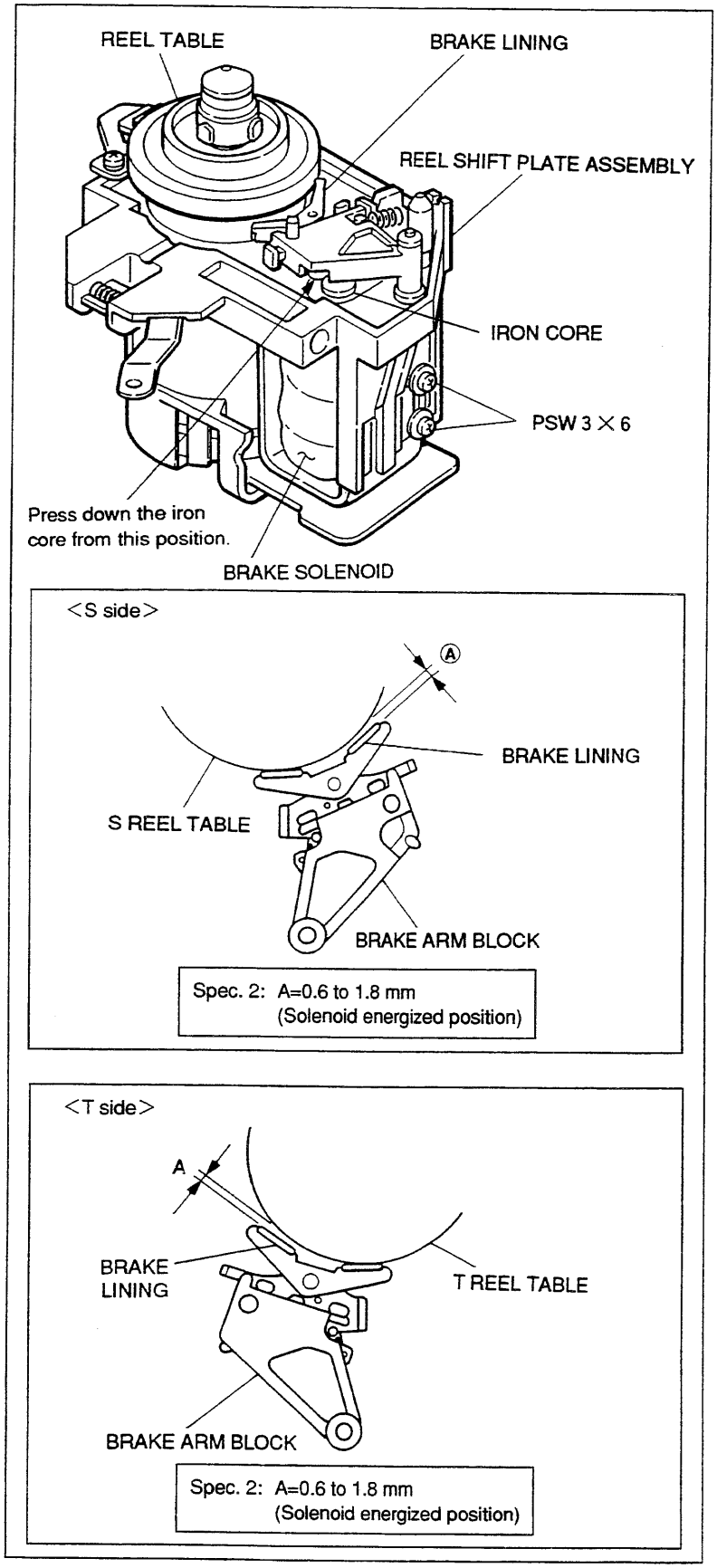

Reel Brake Release Amount Adjustment

8-4. TAPE PATH ADJUSTMENT

1. Parts Location of the Tape Running System

The parts location of the tape running system is described on page 8-135.

2. Notes

(1) Cassette Compartment

- The tape path adjustment should be performed with the cassette compartment not installed in the unit. If not, the check and adjustment may be impossible.
- When the tape path adjustment is performed with the cassette compartment removed, the tape protection circuit is activated and the "ERROR" message may be displayed. In this case, turn the power off, then turn it on again.

(2) S701-1 on SS-52 board

This switch selects whether to enable the tracking control volume.
- ON (Upper position): Tracking control disabled.
- OFF (Lower position) : Tracking control enabled.

After adjustment is completed, be sure to return this switch to ON (upper position).

3. Preparation

(1) Remove the rotary head cleaner. (Refer to Section 8-2-4.)
(2) Clean the following portions :
- Rotary heads (Refer to Section 7-1-2.)
- Upper drum's tape running surface (Refer to Section 7-1-3.)
- Lower drum's tape running surface and lead surface (Refer to Section 7-1-4.)
- Stationary heads (Refer to Section 7-1-5.)
- Tape running system and tape cleaner (Refer to Section 7-1-6.)

Note : The tape running condition may be difficult to check with the rotary head cleaner installed. Therefore, remove this component in advance.

4. Locking Compound

When loosing the following screws, apply locking compound to the screws after adjustment is completed.
The locking compound that applied to other surrounding parts must be wiped off with gauze or soft cloth.

- Locking compound : 7-432-114-11

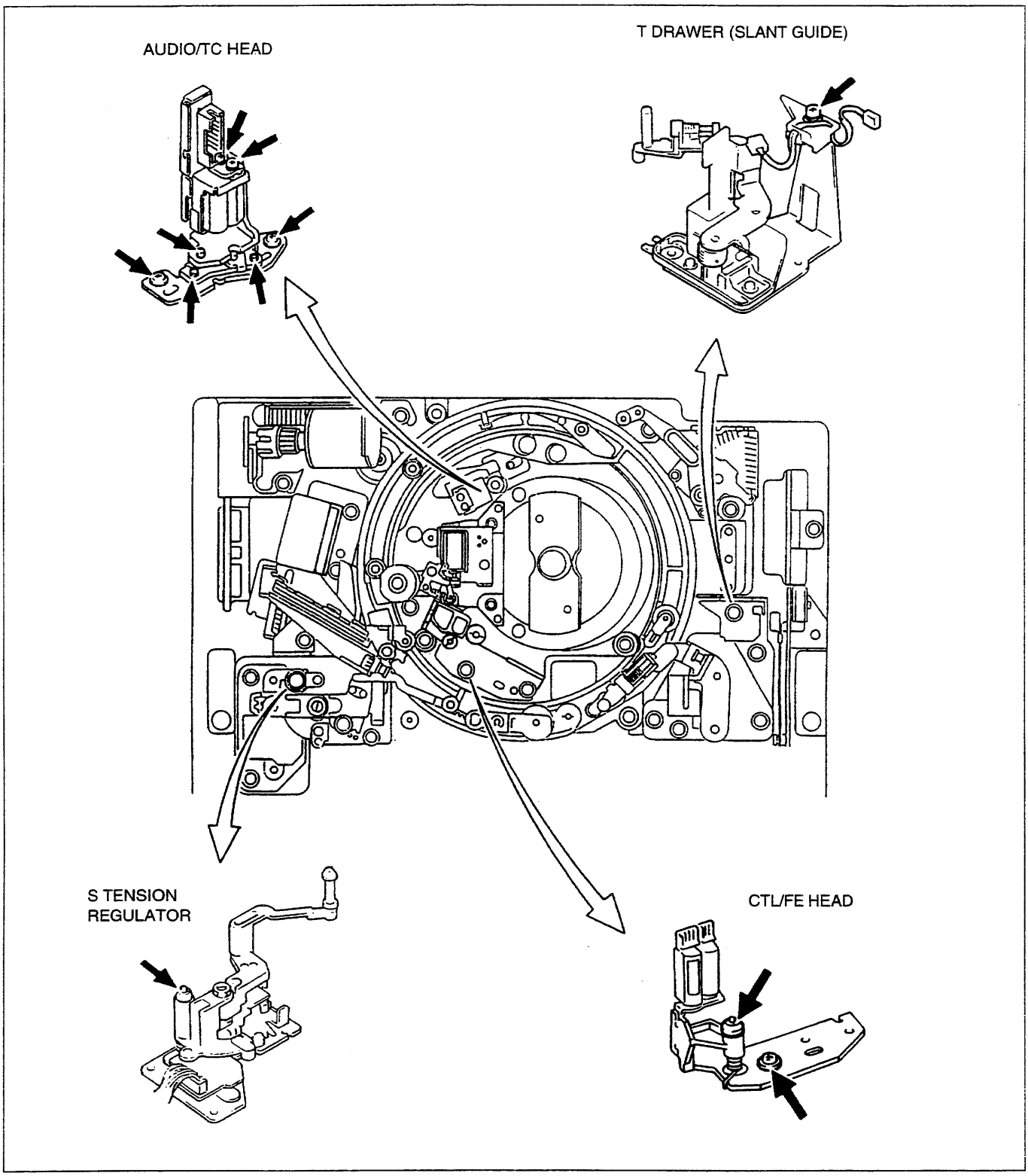

5. Alignment Tape

(1) ZR2-1P

- Part No.: 8-960-073-61
- Contents:

TIME min. sec	CTL TRACK	CUE TRACK	VIDEO/AUDIO TRACK	USE
00 : 00 ↑ (7 : 3 PULSE) ↓ 15: 00	CTL	1 kHz, 0 VU	4 MHz (A CH only)	• Video Tracking Adjustment • CTL Head Position Adjustment • Audio/TC Head Height Adjustment (DVW-500P) • Audio/TC Head Position Adjustment • Audio Level Check in REV Mode (DVW-500P)
20 : 00	CTL	12 kHz, 0 VU	A, C CH – 4 MHz B, D CH – 8 MHz	• Audio/TC Head Azimuth Adjustment (DVW-500P) • Audio/TC Head Head-to-tape Contact Adjustment (DVW-500P)
25 : 00	CTL	12 kHz, 0 VU	16 MHz (ALL CH)	
27 : 00	CTL	———	50 % FLAT FIELD (ALL CH)	

* CTL head height adjustment can be performed at any portion of this alignment tape.

Note
When the 7:3 pulse portion is played back, the displayed TC data is interpolated by CTL signal due to no recording on the time code track.

(2) CR8-1A PS

- Part No.: 8-960-098-45
- Contents:

TIME min. sec	AUDIO TRACK	VIDEO TRACK	CTL TRACK	USE
00 : 00 02 : 55	1 kHz, 0 VU	———	CTL	
03: 00	Blank			
04 : 55	10 kHz, −10 VU	———	CTL	• Audio/TC Head Azimuth Adjustment (DVW-A500P) • Audio/TC Head Head-to-tape Contact Adjustment (DVW-A500P)
05 : 00	Blank			
05 : 55	1 kHz, −20 VU	———	CTL	
06 : 00	Blank			
07 : 55	40 Hz, −20 VU 7 kHz, −20 VU 10 kHz, −20 VU 15 kHz, −20 VU	———	CTL	
08 : 00	Blank			
10 : 00	1 kHz, 0 VU	———	1 kHz Sine Wave	• Audio/TC Head Height Adjustment (DVW-A500P) • Audio Level Check in REV Mode (DVW-A500P)

Note
This alignment tape is not required in the DVW-500P.

(3) CR5-1B PS

- Part No.: 8-960-096-91
- Contents:

TIME min.:sec.	VIDEO TRACK	AFM	CTL	USE
0 : 00	RF Sweep	No Signal	CTL	
2 : 00	60% H Sweep (CTDM)			• Y/C Head Head-to-tape Contact Check
5 : 00	Pulse & Bar (CTDM)			
8 : 00	60% Multi Burst			
11 : 00	Pulse & Bar			
14 : 00	100% Color Bars	400 Hz SINE WAVE 25 kHz DEVIATION		
16 : 30		75 kHz DEVIATION		
17 : 00	50% Bowtie & 10T	No Signal		
19 : 00	Line 17 Signal			
22 : 00	Quad Phase			
24 : 00	Flat Field			
26 : 00	100% Color Bars with Dropout			
28 : 00	Composite H Sweep with VISC			
30 : 00				

Note

This alignment tape is not required in the DVW-500P.

8-4-1. Audio/TC Head Zenith Adjustment

Note

The audio/TC head zenith check and adjustment are not required except when the audio/TC head is replaced.

Tools

- Flatness plate (SL-657): J-6086-570-A
- Cleaning cloth: 3-184-527-01
- Cleaning fluid: 9-919-573-01

Check

1. **Unthreading End Mode**
   Check that the unit is in the unthreading end mode.

2. **Check the Audio/TC Head Zenith**
   (1) Push the flatness plate lightly against the TG-4 guide and audio RP head.

   Caution
   Be careful not to damage the surface of the audio RP head and TG-4 guide.

   (2) Check that no clearance exists between the audio RP head and flatness plate as TG-4 guide reference in step (1).

   If the specification is not satisfied, perform steps 3 and later.
   If it is satisfied, perform step 7.

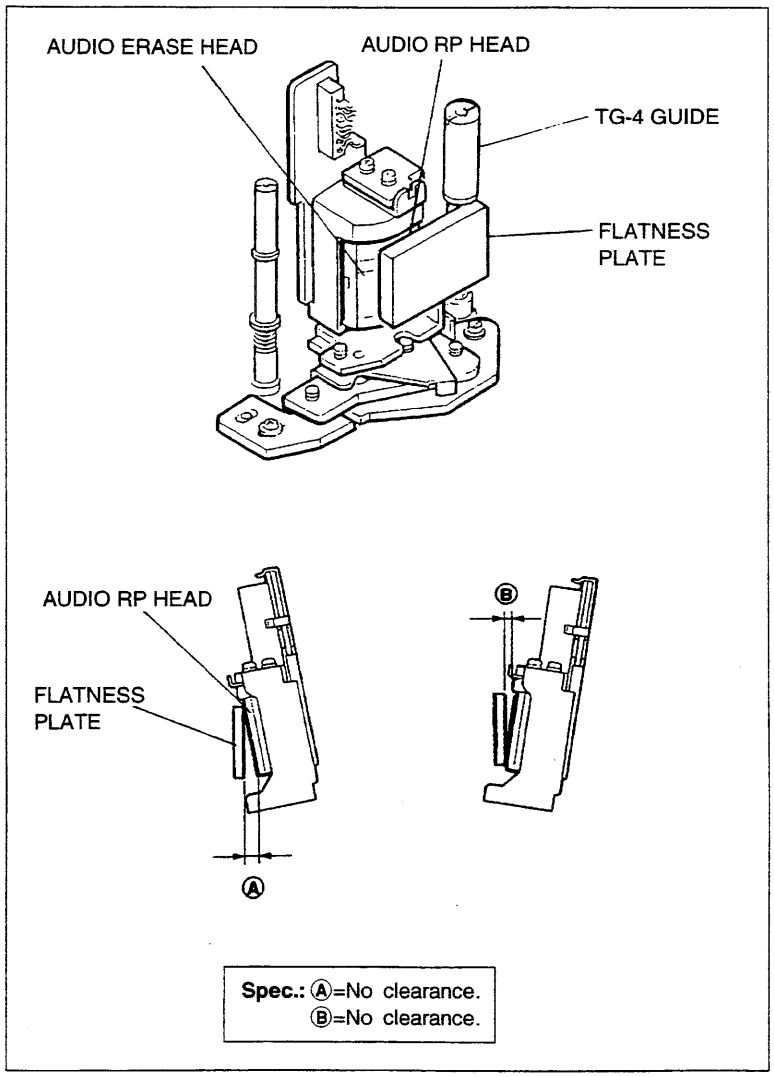

Audio/TC Head Zenith Check

Adjustment

3. **Remove the CL Guide Rail**
   Remove the two screws, then remove the CL guide rail.

4. **In Case Clearance Exists at the Upper Part (Fig. 1)**
   Turn the zenith adjustment screw counterclockwise to satisfy the specification.

5. **In Case Clearance Exists at the Lower Part (Fig. 2)**
   Turn the zenith adjustment screw clockwise to satisfy the specification.

6. **Install the CL Guide Rail**
   Install the CL guide rail with two screws.

7. **Cleaning**
   Clean the surface of the audio RP head, audio erase head, and TG-4 guide with a cleaning cloth moistened with cleaning fluid.

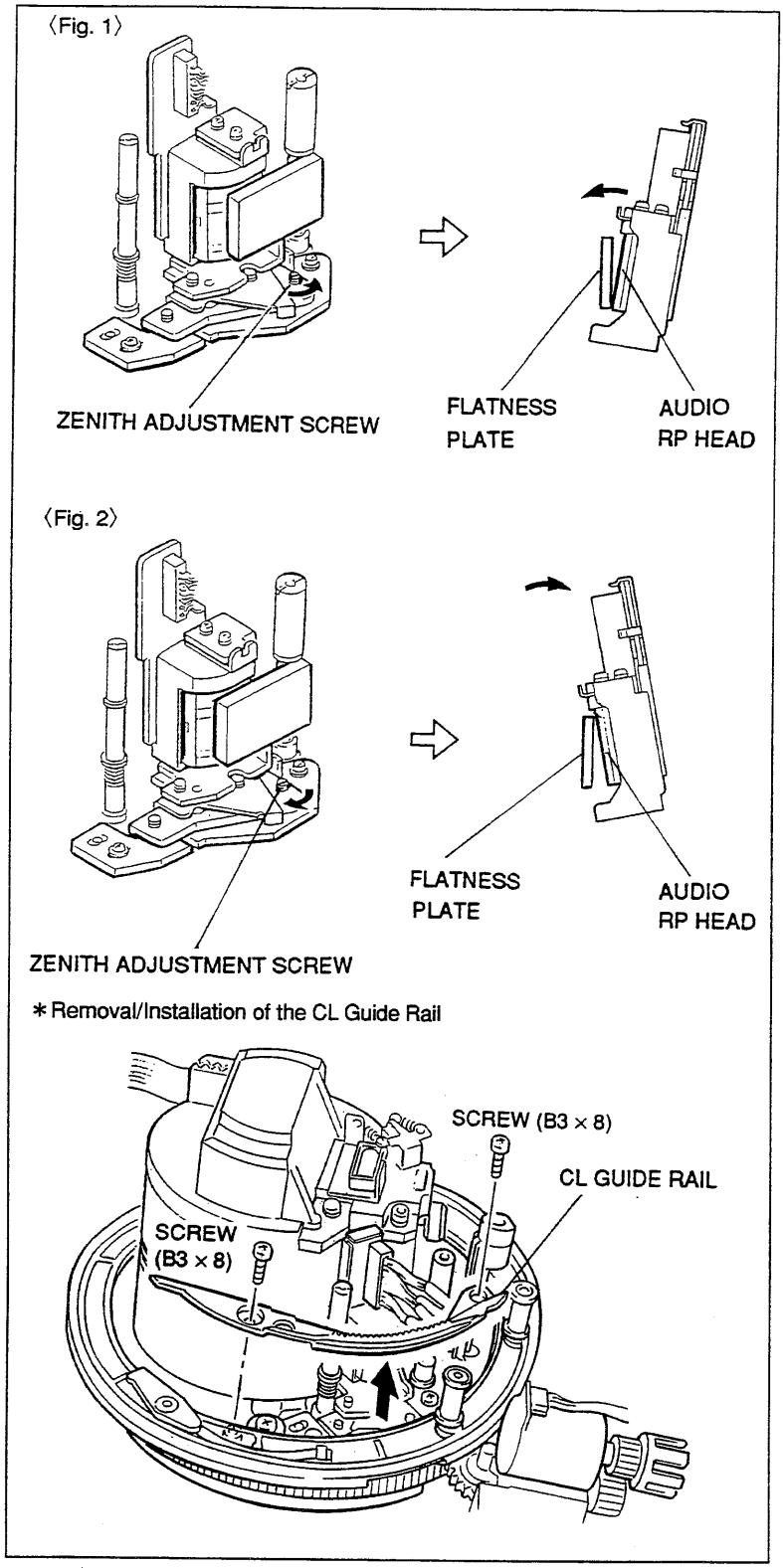

Audio/TC Head Zenith Adjustment

8-4-2. Tape Running Adjustment

Drum Entrance Side

Tools

- Digital Betacam cassette BCT-D32 (S cassette)
- Adjustment mirror (circular): J-6080-029-A
- Tape guide adjustment driver (MW-261): J-6322-610-A

Check

1. **Set the S Cassette Tape**
   (1) Place the reel shift plate assembly in the S cassette position.
   (2) Set the BCT-D32 and put a weight on the cassette so that it does not rise up.

2. **Turn the Power On**

3. **PLAY Mode**
   Check that the tape running condition satisfies specification 1.

   If specification 1 is not satisfied, perform steps 9 and 10.

4. **REV × 10 Mode**
   Check that the tape running condition satisfies specification 1.

   If specification 1 is not satisfied, perform steps 9 and 10.

5. **F.FWD Mode**
   Check that the tape running condition satisfies specification 1.

   If specification 1 is not satisfied, perform steps 9 and 10.

6. **REW Mode**
   Check that the tape running condition satisfies specification 1.

   If specification 1 is not satisfied, perform steps 9 and 10.

7. **REV × 1 Mode**
   Check that the tape running condition satisfies specification 1.

   If specification 1 is not satisfied, perform steps 9 and 10.

8. **VAR × -1/30 Mode**
   Check that the tape running condition satisfies specification 1.

   If specification 1 is not satisfied, perform steps 9 and 10.

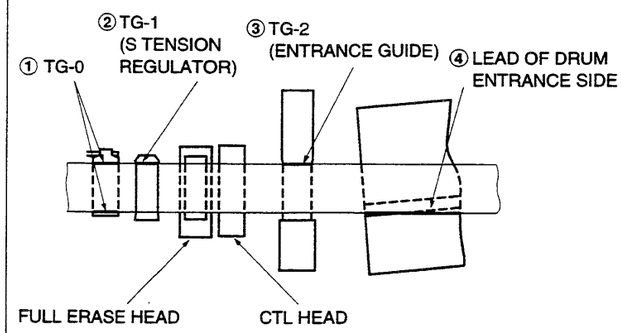

Spec. 1: ① TG-0
The tape runs without any curl at the upper and lower flanges.

② TG-1 (S TENSION REGULATOR)
The tape runs in contact with the upper flange.
The tape curl is less than 1/10 of the tape width.

③ TG-2 (ENTRANCE GUIDE)
The tape runs in contact with the upper flange.
The tape curl is less than 1/10 of the tape width.

④ LEAD OF DRUM ENTRANCE SIDE
The tape runs without any curl at the lead.

Tape Running Check at Drum Entrance Side

Adjustment

9. **Adjust the TG-1 and TG-2 (Entrance Guide) Height**
   (1) Put the unit into the PLAY mode.
   (2) Turn the height adjustment nut of TG-1 and the upper flange of TG-2 using a tape guide adjustment driver and adjust the height of TG-1 and TG-2 so that the specification 1 is satisfied.

10. **Recheck the Tape Running at Drum Entrance Side**
    Refer to steps 3 through 8.

    If the specification 1 is not satisfied, perform the adjustment in step 9 again.

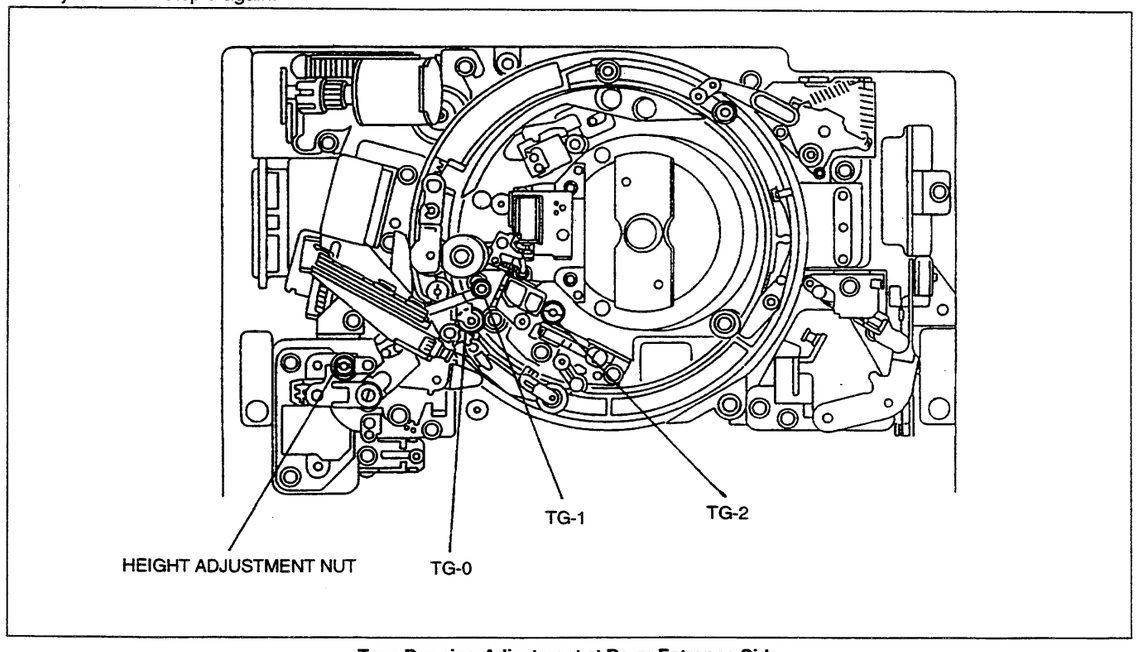

Tape Running Adjustment at Drum Entrance Side

Drum Exit Side

Tools

- Digital Betacam cassette BCT-D32 (S cassette)
- Digital Betacam cassette BCT-D94L (L cassette)
- Adjustment mirror (circular): J-6080-029-A
- Tape guide adjustment driver (MW-261): J-6322-610-A

Check

1. **Set the S Cassette Tape**
   (1) Place the reel shift plate assembly in the S cassette position.
   (2) Set the BCT-D32 and put a weight on the cassette so that it does not rise up.

2. **Turn the Power On**

3. **PLAY Mode**
   Check that the tape running condition satisfies specification 2.

   If specification 2 is not satisfied, perform steps 12 and 14.

4. **REV × 10 Mode**
   Check that the tape running condition satisfies specification 2.

   If specification 2 is not satisfied, perform steps 13 and 14.

5 **F.FWD Mode**
   Check that the tape running condition satisfies specification 2.

   If specification 2 is not satisfied, perform steps 12 and 14.

6. **REW Mode**
   Check that the tape running condition satisfies specification 2.

   If specification 2 is not satisfied, perform steps 12 and 14.

7. **REV × 1 Mode**
   Check that the tape running condition satisfies specification 2.

   If specification 2 is not satisfied, perform steps 12 and 14.

8. **VAR × -1/30 Mode**
   Check that the tape running condition satisfies specification 2.

   If specification 2 is not satisfied, perform steps 13 and 14.

9. **Set the L Cassette Tape**
   (1) Take out the BCT-D32.
   (2) Press S700 (C-1/side A) on the SS-52 board and place the reel shift plate assembly in the L cassette position.
   (3) Set the BCT-D94L and put a weight on the cassette so that it does not rise up.

10. **Play Back the Tape**
    Play back the tape beginning portion of the BCT-D94L.

11. **Check the Tape Running at the T Tape Guide of Cassette**
    Check that the tape running condition satisfies specification 3 at TG-10 and the T tape guide of the BCT-D94L.

    If specification 3 is not satisfied, perform step 15.

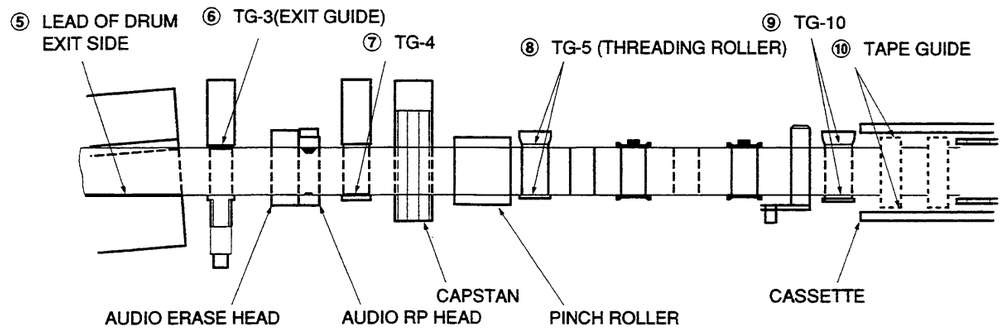

Spec. 2: ⑤ LEAD OF DRUM EXIT SIDE
The tape runs without any curl at the lead.

⑥ TG-3 (EXIT GUIDE)
The tape runs in contact with the upper flange.
The tape curl is less than 1/10 of the tape width.

⑦ TG-4
The tape runs in contact with the lower flange.
The tape curl is less than 1/10 of the tape width.

⑧ TG-5 (THREADING ROLLER)
The tape runs without any curl at the upper and lower flanges.

Spec. 3: PLAY Mode
⑨ TG-10
The tape runs not in contact with the upper and lower flanges.

⑩ TAKE-UP SIDE TAPE GUIDE
The tape runs without any curl at the upper and lower portions of the tape guide.

Tape Running Check at Drum Exit Side

Adjustment

12. Adjust the TG-3 (Exit Guide) and TG-4 Height

(1) Set the BCT-D32 and put the unit into the PLAY mode.
(2) Turn the upper flanges of TG-3 and TG-4 using a tape guide adjustment driver and adjust the height of TG-3 and TG-4 so that the specification 2 is satisfied.

13. Adjust the TG-5 (Threading Roller) Height (only when the specification is not satisfied in REV × 10 mode and VAR × –1/30 mode)

(1) Put the unit into the EJECT mode.
(2) Take out the cassette tape.
(3) Turn the upper flange of TG-5 using a tape guide adjustment driver and adjust the height of TG-5 so that the specification 2 is satisfied.
(4) Set the S cassette tape and put the unit into the REV × 10 mode or VAR × –1/30 mode. At this time, check that the tape running condition satisfies specification 2.

If it is not satisfied, repeat steps (1) through (4) mentioned above.

14. Recheck the Tape Running at Drum Exit Side

Refer to steps 2 through 8.

If the specification 2 is not satisfied, perform the adjustment in step 12 again.
(If the specification 2 is not satisfied in REV × 10 mode and VAR × –1/30 mode, perform the adjustment in step 13 again.)

15. Adjust the Slant Guide Slantness

(1) Loosen the fixing screw of the adjustment plate by 1/4 to 1/2 turn.
(2) Insert a 3 mm flatbladed screwdriver into the notch of the adjustment plate.
(3) Adjust the slantness of the slant guide so that specification 3 is satisfied.
(4) Tighten the screw loosened in step (1).
(5) Recheck that specification 3 is satisfied referring to steps 9 through 11.

If it is not satisfied, repeat steps (1) through (5) mentioned above.

8-4-2. Tape Running Adjustment

*** TG-3 and TG-4 Height Adjustment/Slant Guide Slantness Adjustment**

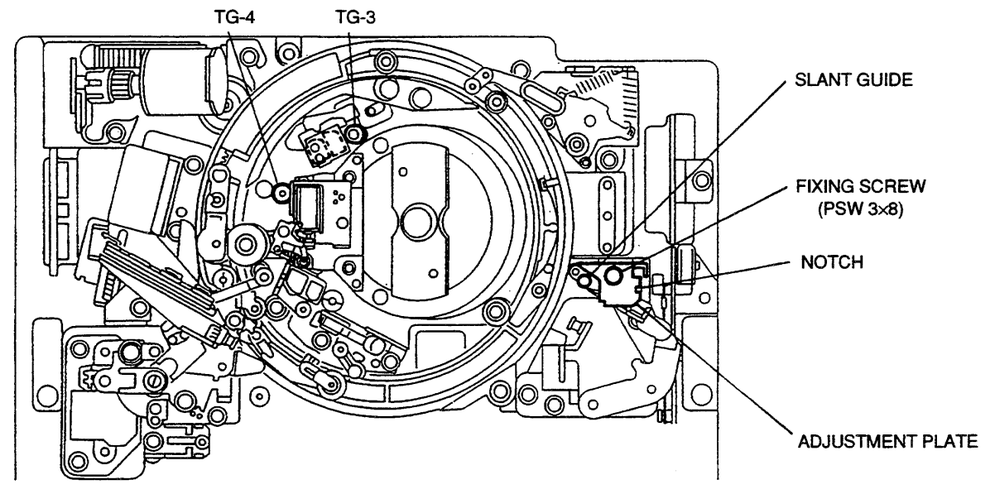

*** TG-5 Height Adjustment (only when the specification is not satisfied in REV × 10 mode and VAR × –1/30 mode)**

〈Unthreading End Mode〉

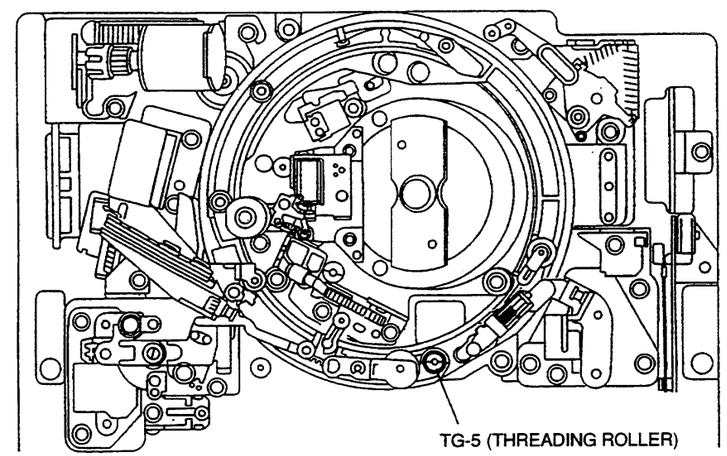

Tape Running Adjustment at Drum Exit Side

8-4-3. Video Tracking Adjustment

8-4-3. Video Tracking Adjustment

Note

The Y/C Head Head-to-tape Contact Check (step 15) should be performed in the DVW-A500P only. In the DVW-500P, it is not required.

Tools

- Alignment tape ZR2-1P: 8-960-073-61
- Oscilloscope
- Alignment tape CR5-1B PS: 8-960-096-91
  (Not required in the DVW-500P)
- Adjustment mirror (circular): J-6080-029-A
- Tape guide adjustment driver (MW-261): J-6322-610-A

Preparation

1. **Turn the Power Off**
2. **Connect the Oscilloscope**
   CH-1: TP2801/SS-52 board (SAT ENV signal)
   TRIG: TP819/SS-52 board (1/2 VD signal)
3. **Set the Alignment Tape**
   Set the ZR2-1P and put a weight on the cassette so that it does not rise up.

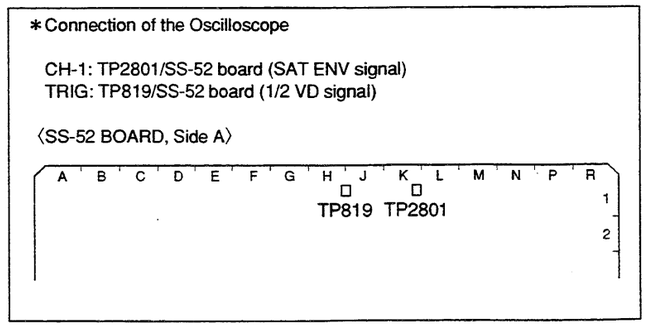

Preparation

8-97

Check

4. Turn the Power On

5. PLAY Mode

(1) Play back the ZR2-1P (00:00 to 15:00).

(2) Put S701-1 on the SS-52 board to OFF (lower position) so that the tracking control volume can be operated.

(3) Turn RV700 (tracking control volume) on the SS-52 board and check that the output levels at the entrance and exit sides do not become higher than the output level in the center portion.

If they become higher, perform the adjustment (at the Drum Entrance Side or Drum Exit Side) in steps 16 and later.

(4) Turn RV700 on the SS-52 board clockwise and adjust the center portion of the RF envelope waveform so that it is 80% of the maximum output level.
At that time, check that the RF envelope waveform satisfies specification 1.

If the level fluctuates, read the average level.Then turn RV700 on the SS-52 board so that the output level in the center portion of the RF envelope waveform is maximum, and check that the fluctuation amounts satisfy specification 2.

If specification 1 and 2 are not satisfied, perform the adjustment (at the Drum Entrance Side or Drum Exit Side) in steps 16 and later.

– To be continued. –

〈SS-52 BOARD, Side A〉

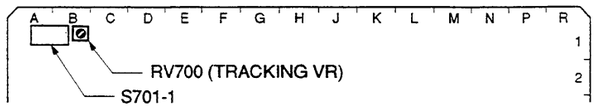

ON: upper position (TRACKING VR operation disabled)
OFF: lower position (TRACKING VR operation enabled)

- **Alignment Tape: ZR2-1P (00: 00 to 15: 00)**

〈Head-to-Tape Contact〉 S701-1 : OFF

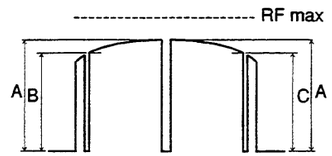

A = RF max × 0.8

Spec. 1: $\frac{B}{A} \times 100 \geqq 70\ \%$

$\frac{C}{A} \times 100 \geqq 70\ \%$

(Output levels (B and C) at the drum entrance side and exit side are more than 70% of the center level (A).)

〈Fluctuation〉 S701-1 : OFF

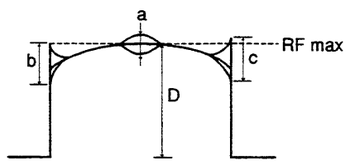

D= average level

Spec. 2: $\frac{a}{D} \times 100 \leqq 20\ \%$

$\frac{b}{D} \times 100 \leqq 20\ \%$

$\frac{c}{D} \times 100 \leqq 20\ \%$

(Fluctuation amounts (a, b, c) at the drum center portion, entrance side and exit side are less than 20% of the average level (D).)

If the output waveform is extremely abnormal condition as shown in Fig.1 after replacing the inner drum assembly, perform the steps 1 to 5 below.

① Remove the upper drum. (Refer to steps 1 through 5 in Section 8-2-1.)
② Clean the drum support's upper drum contacting surface. (Refer to step 7 in Section 8-2-1.)
③ Clean the upper drum's drum support contacting surface. (Refer to step 12 in Section 8-2-1.)
④ Install the upper drum and other removed parts. (Refer to steps 13 through 19 in Section 8-2-1.)
⑤ Check the video tracking again.

If a bamboo stick is available, it is recommended to observe the waveform while pressing the tape as shown in Fig.2 before performing the steps 1 to 5 above. If the abnormal waveform returns to the normal waveform when pressing down by bamboo stick, it shows that the tape is running apart from the drum lead without touching. In such case, reinstall the upper drum according to the steps 1 to 5 above.

<Fig. 1>

* abnormal waveform (example)

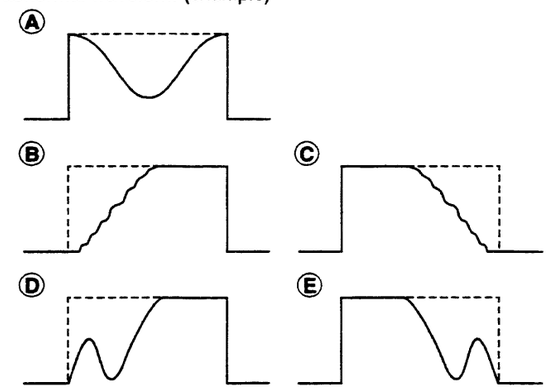

<Fig. 2>

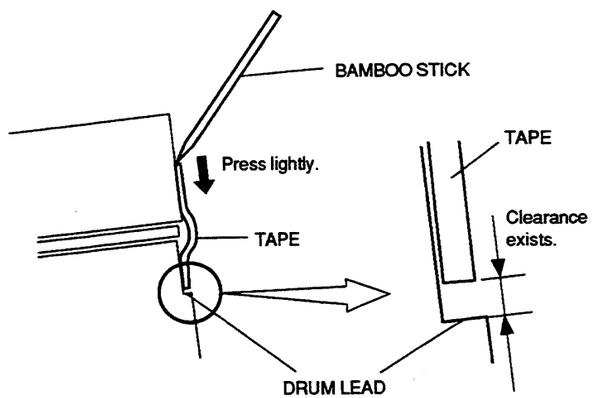

Video Tracking Check (PLAY)

6. REV×10 Mode

(1) Put S701-1 on the SS-52 board to ON (upper position) and fix the tracking control volume.
(2) Play back the ZR2-1P
(3) Put the unit into the REV×10 mode and check that the RF envelope waveform satisfies specification 3.

If specification 3 is not satisfied, perform the adjustment (at the Drum Entrance Side or Drum Exit Side) in steps 16 and later.

7. F.FWD and REW Modes

(1) Play back the ZR2-1P
(2) Put the unit into the F.FWD and REW modes and check that no waveform lacking exists in RF envelope waveform. (Spec. 4)

If specification 4 is not satisfied, perform the adjustment (at the Drum Entrance Side or Drum Exit Side) in steps 16 and later.

8. REW Mode to PLAY Mode

(1) Play back the ZR2-1P (00:00 to 15:00)
(2) Put the unit into the REW mode once. Two or three seconds later, put the unit into PLAY mode.
Check that the RF envelope waveform turns to the maximum level with the even level within 1 second. (Spec. 5-①)

If specification 5-② is not satisfied in waveform A or B shown in the figure, check the tape running at the drum entrance side. (Refer to Section 8-4-2.)

If specification 5-② is not satisfied in waveform C shown in the figure, check the tape running at the drum exit side. (Refer to Section 8-4-2.)

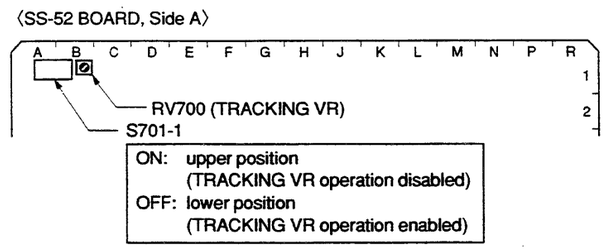

• Alignment Tape: ZR2-1P

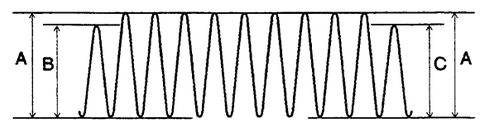

Spec. 3: $\frac{B}{A} \times 100 \geqq 70\ \%$ (DRUM ENTRANCE SIDE)
$\frac{C}{A} \times 100 \geqq 70\ \%$ (DRUM EXIT SIDE)

Video Tracking Check (REV x 10)

• Alignment Tape: ZR2-1P

Spec. 4: No waveform lacking exists.

Video Tracking Check (F. FWD, REW)

• Alignment Tape: ZR2-1P (00:00~15:00)

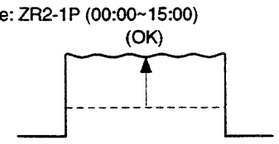

Spec. 5-①: The RF envelope waveform turns to the maximum level with the even level within 1 second.

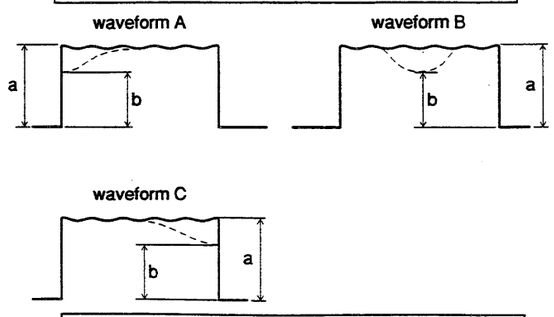

Spec. 5-②: $\frac{b}{a} \times 100 \geqq 70\ \%$
(The output level (b) is more than 70 % of the level in normal PLAY mode (a) and returns it to the level in normal PLAY mode within 1 second.)

Video Tracking Check (REW → PLAY)

9. VAR×-1/30 Mode

(1) Play back the ZR2-1P (00:00 to 15:00).
(2) Put the unit into the VAR×-1/30 mode and check that the no waveform lacking exists, the waveform are equal, and no waveform disordered exists. (Spec. 6)

In case of the drum entrance side is no good, perform the tracking adjustment at drum entrance side. (Refer to steps 16 through 18.)
In case of the drum exit side is no good, adjust the height of TG-5 first. In case of the drum exit side is no good though TG-5 height adjustment is performed, perform the tracking adjustment at drum exit side. (Refer to steps 19 through 23.)

Check that the tape curl at the lower flange of TG-4 is less than 1/10 of the tape width (Spec. 7)

If the specification 7 is not satisfied, adjust the height of TG-5 first. In case of the drum exit side is no good though TG-5 height adjustment is performed, perform the tracking adjustment at drum exit side. (Refer to steps 19 through 23.)

10. PLAY Mode to VAR×-1/30 Mode

(1) Play back the ZR2-1P (00:00 to 15:00).
(2) Put the unit into the PLAY mode once. Two or three seconds later, put the unit into the VAR×-1/30 mode.

Check that the no waveform lacking exists, the waveform are equal, and no waveform disordered exists when changing the mode. (Spec. 6)

In case of the drum entrance side is no good, perform the tracking adjustment at drum entrance side. (Refer to steps 16 through 18.)
In case of the drum exit side is no good, adjust the height of TG-5 first. In case of the drum exit side is no good though TG-5 height adjustment is performed, perform the tracking adjustment at drum exit side. (Refer to steps 19 through 23.)

Check that the tape curl at the lower flange of TG-4 is less than 1/10 of the tape width. (Spec. 7)

If the specification 7 is not satisfied, adjust the height of TG-5 first. In case of the drum exit side is no good though TG-5 height adjustment is performed, perform the tracking adjustment at drum exit side. (Refer to steps 19 through 23.)

• Alignment Tape : ZR2-1P (00:00~15:00)

(OK)

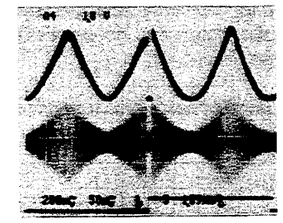

Spec. 6: No waveform lacking exists.
The waveform are equal, and no waveform disordered exists.

∗ In case of the drum entrance side is NG (Example):

(NG) (NG)

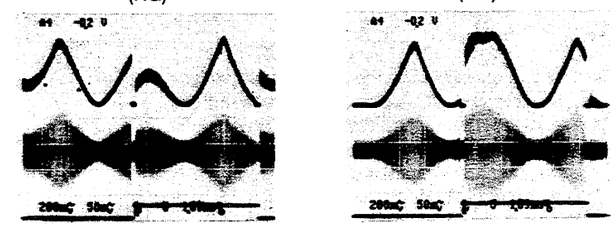

∗ In case of the drum exit side is NG (Example):

(NG) (NG)

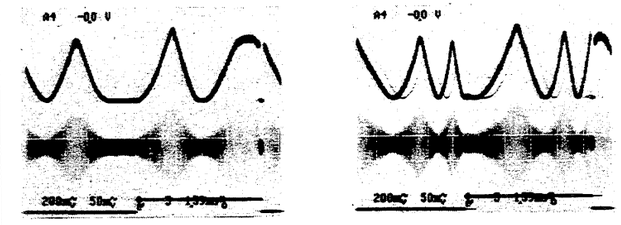

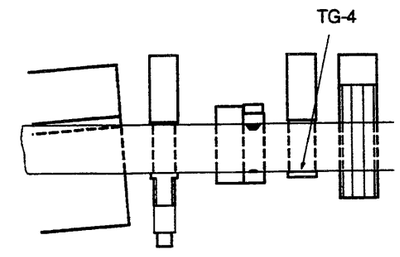

Spec. 7: Lower Flange of TG-4
The tape curl is less than 1/10 of the tape width.

Video Tracking Check (VAR×-1/30, VAR×-1)

11. VARx-1 Mode

(1) Play back the ZR2-1P (00:00 to 15:00).

(2) Put the unit into the VARx-1 mode, and check that the no waveform lacking exists, the waveform are equal, and no waveform disordered exists. (Spec. 6)

In case of the drum entrance side is no good, perform the tracking adjustment at drum entrance side. (Refer to steps 16 through 18.) In case of the drum exit side is no good, adjust the height of TG-5 first. In case of the drum exit side is no good though TG-5 height adjustment is performed, perform the tracking adjustment at drum exit side. (Refer to steps 19 through 23.)

Check that the tape curl at the lower flange of TG-4 is less than 1/10 of the tape width. (Spec. 7)

If the specification 7 is not satisfied, adjust the height of TG-5 first. In case of the drum exit side is no good though TG-5 height adjustment is performed, perform the tracking adjustment at drum exit side. (Refer to steps 19 through 23.)

12. PLAY Mode to VARx-1 Mode

(1) Play back the ZR2-1P (00:00 to 15:00).

(2) Put the unit into the PLAY mode once. Two or three seconds later, put the unit into the VARx-1 mode.

Check that no waveform lacking exists, the waveform are equal, and no waveform disordered exists when changing the mode. (Spec. 6)

In case of the drum entrance side is no good, perform the tracking adjustment at drum entrance side. (Refer to steps 16 through 18.) In case of the drum exit side is no good, adjust the height of TG-5 first. In case of the drum exit side is no good though TG-5 height adjustment is performed, perform the tracking adjustment at drum exit side. (Refer to steps 19 through 23.)

Check that the tape curl at the lower flange of TG-4 is less than 1/10 of the tape width. (Spec. 7)

If the specification 7 is not satisfied, adjust the height of TG-5 first. In case of the drum exit side is no good though TG-5 height adjustment is performed, perform the tracking adjustment at drum exit side. (Refer to steps 19 through 23.)

• Alignment Tape : ZR2-1P (00:00~15:00)

(OK)

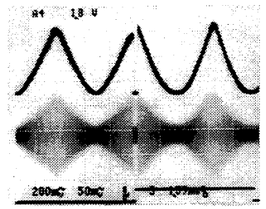

Spec. 6: No waveform lacking exists.
The waveform are equal, and no waveform disordered exists.

* In case of the drum entrance side is NG (Example):

(NG) (NG)

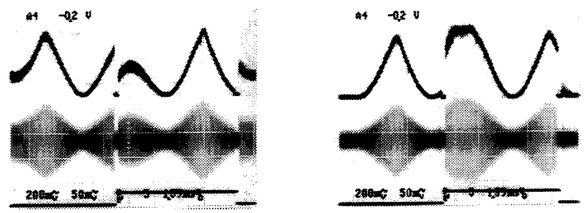

* In case of the drum exit side is NG (Example):

(NG) (NG)

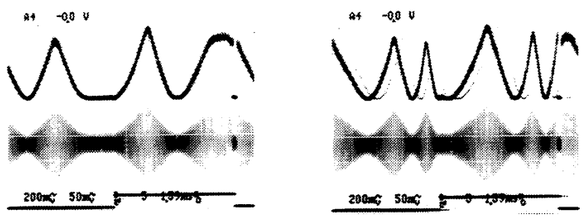

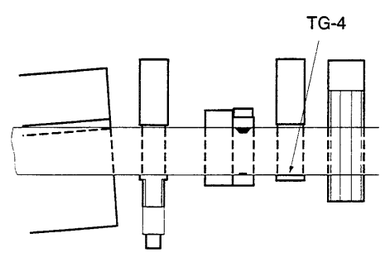

Spec. 7: Lower Flange of TG-4
The tape curl is less than 1/10 of the tape width.

Video Tracking Check (VARx-1/30, VARx-1)

13. Check the Confidence Head Head-to-tape Contact

(1) Connect the oscilloscope.
CH-1: TP601/EQ-45 board (CNF AC signal)
CH-2: TP701/EQ-45 board (CNF BD signal)
TRIG: TP105/EQ-45 board (CNF AC SEL signal)

(2) Play back the ZR2-1P (20:00 to 25:00).

(3) Put S701-1 on the SS-52 board to ON (upper position) and fix the tracking control volume.

(4) Check that the all channels output the RF envelope waveform.

* Connection of the Oscilloscope

CH-1: TP601/EQ-45 board (CNF AC signal)
CH-2: TP701/EQ-45 board (CNF BD signal)
TRIG: TP105/EQ-45 board (CNF AC SEL signal)

〈EQ-45 BOARD, Side A〉 (Board suffix No. 15 and later)

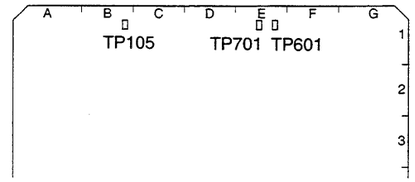

(Board suffix No. 11, 12, 13, 22, 23, 31, 41)

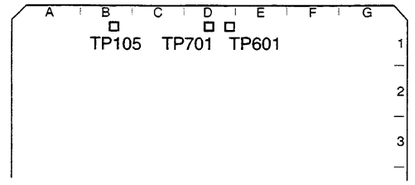

〈SS-52 BOARD, Side A〉

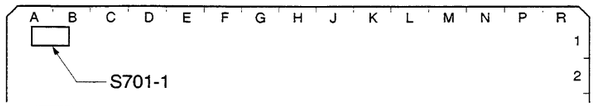

ON: upper position
OFF: lower position

* Alignment Tape: ZR2-1P (20:00~25:00)

Spec.8: All channels output the RF envelope waveform.

Confidence Head Head -to-tape Contact Check

14. Check the Advance Head Head-to-tape Contact

(1) Connect the oscilloscope.
CH-1: TP401/EQ-45 board (Y/ADV AC signal)
CH-2: TP501/EQ-45 board (C/ADV BD signal)
TRIG: TP103/EQ-45 board (Y/ADV AC SEL signal)

(2) Play back the ZR2-1P (20:00 to 25:00).

(3) Put S701-1 on the SS-52 board to ON (upper position) and fix the tracking control volume.

(4) Check that the all channels output the RF envelope waveform.

∗ Connection of the Oscilloscope

CH-1: TP401/EQ-45 board (Y/ADV AC signal)
CH-2: TP501/EQ-45 board (C/ADV BD signal)
TRIG: TP103/EQ-45 board (Y/ADV AC SEL signal)

〈EQ-45 BOARD, Side A〉 (Board suffix No. 15 and later)

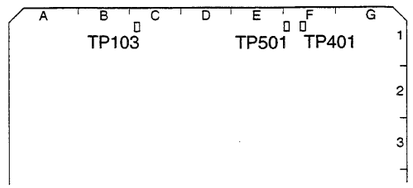

(Board suffix No. 11, 12, 13, 22, 23, 31, 41)

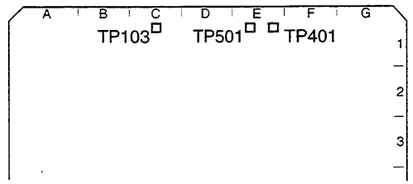

〈SS-52 BOARD, Side A〉

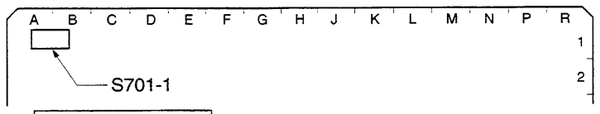

ON: upper position
OFF: lower position

∗ Alignment Tape: ZR2-1P (20:00~25:00)

Spec.8: All channels output the RF envelope waveform.

Advance Head Head -to-tape Contact Check

8-4-3. Video Tracking Adjustment

Note

Y/C Head Head-to-tape Contact Check should be performed in the DVW-A500P only. In the DVW-500P, it is not required.

15. Check the Y/C Head Head-to-tape Contact

(1) Connect the Oscilloscope.
CH-1: TP401/EQ-45 board (Y/ADV AC signal)
CH-2: TP501/EQ-45 board (C/ADV BD signal)
TRIG: TP819/SS-52 board (1/2 VD signal)

(2) Take out the ZR2-1P.

(3) Set the CR5-1B PS and put a weight on the cassette so that it does not rise up.

(4) Play back the CR5-1B PS (2:00 and later).

(5) Put S701-1 on the SS-52 board to ON (upper position) and fix the tracking control volume.

(6) Check that the all channels output the RF envelope waveform.

∗ Connection of the Oscilloscope

CH-1: TP401/EQ-45 board (Y/ADV AC signal)
CH-2: TP501/EQ-45 board (C/ADV BD signal)
TRIG: TP819/SS-52 board (1/2 VD signal)

〈EQ-45 BOARD, Side A〉 (Board suffix No. 15 and later)

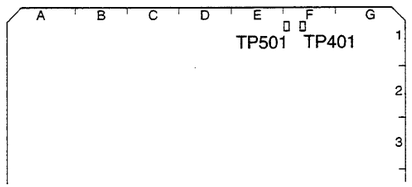

(Board suffix No. 11, 12, 13, 22, 23, 31, 41)

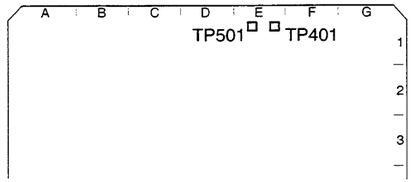

〈SS-52 BOARD, Side A〉

ON: upper position
OFF: lower position

∗ Alignment Tape: CR5-1B PS (2:00 and later)

Spec.8: All channels output the RF envelope waveform.

Y/C Head Head -to-tape Contact Check (only DVW-A500P)

Adjustment

Drum Entrance Side

16. Adjust the Tracking at Drum Entrance Side

(1) Play back the ZR2-1P (00:00 to 15:00).
(2) Put S701-1 on the SS-52 board to OFF (lower position) so that the tracking control volume can be operated.
(3) Turn RV700 on the SS-52 board clockwise and adjust the center portion of the RF envelope waveform so that it is 80% of the maximum output level.
(4) Loosen the upper flange of TG-2 so that the tape does not come in contact with the upper flange of TG-2.
(5) Turn the height adjustment nut of TG-1 so that the RF envelope waveform is as shown in Fig.1.
(6) Turn the upper flange of TG-2 and adjust the height of TG-2 so that the RF envelope waveform is flat. (Fig. 2)

– To be continued. –

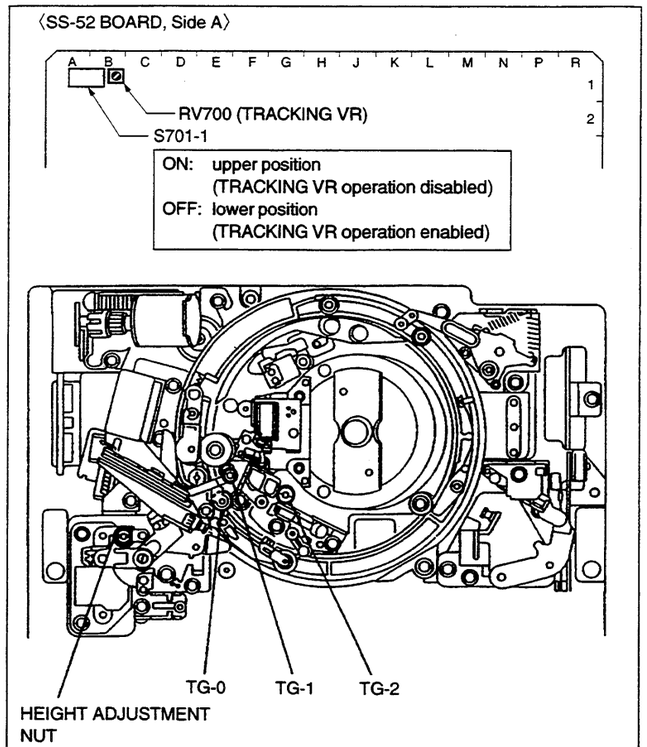

• Alignment Tape: ZR2-1P (00: 00 to 15:00)

〈Fig. 1〉

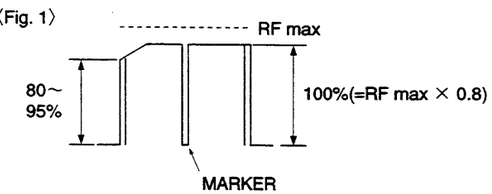

If the pressure against the tape at TG-1, 2 are too much, the waveform become as shown in the right figure. (NG)

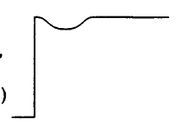

〈Fig. 2〉

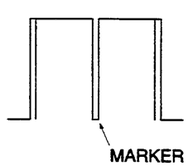

If the waveform is not flat, perform the check and adjustment below.

① Clean the drum lead with a bamboo stick. (Refer to Section 7-1-4.)
② Press down the tape by bamboo stick and check that the tape is running without aparting from the drum lead.
③ Adjust the height of TG-2 so that the RF envelope waveform is nearly flat within the range of the specification shown in the Fig 3. At this time, do not overpress the tape at TG-2.

(7) Check the tape running at the drum entrance side in the following modes.
- PLAY mode
- REV × 10 mode
- F.FWD mode
- REW mode
- REV × 1 mode
- VAR × –1/30 mode

If the tape curl does not satisfy the specification at either TG-0, TG-1 or TG-2, perform the following adjustments while observing the waveform.

① Change the pressure against the tape at TG-1 and TG-2 within the range of the specification shown in the Fig. 1.
- If the tape curl at TG-1 exceeds the specification described in Section 8-4-2, increase the pressure by turning the upper flange of TG-2 clockwise.
- If the tape curl at TG-2 exceeds the specification described in Section 8-4-2, increase the pressure by turning the height adjustment nut of TG-1 clockwise.

② Perform the tracking adjustment again. (Refer to step (1) through (7) mentioned above.)

17. Recheck the Video Tracking

Refer to steps 5 through 12. (page 8-98 to 8-100)

Caution

After adjustment is completed, be sure to put S701-1 on the SS-52 board to ON (upper position).

〈Fig. 3〉

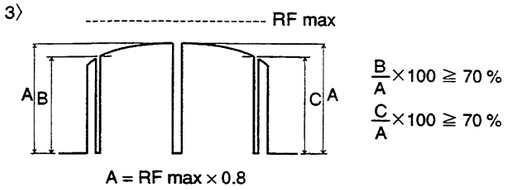

〈Tape Running Check〉

Spec. 1: ① TG-0
The tape runs without any curl at the upper and lower flanges.

② TG-1 (S TENSION REGULATOR)
The tape runs in contact with the upper flange.
The tape curl is less than 1/10 of the tape width.

③ TG-2 (ENTRANCE GUIDE)
The tape runs in contact with the upper flange.
The tape curl is less than 1/10 of the tape width.

④ LEAD OF DRUM ENTRANCE SIDE
The tape runs without any curl at the lead.

Tracking Adjustment at Drum Entrance Side

Drum Exit Side

18. Remove the CL Guide Rail

Remove the two screws, then remove the CL guide rail.

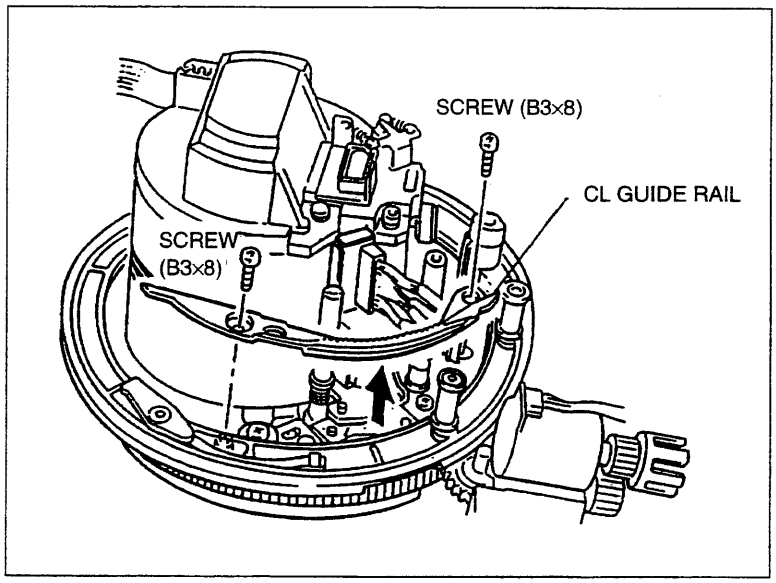

Removal/Installation of the CL Guide Rail

19. Adjust the Tracking at Drum Exit Side

(1) Play back the ZR2-1P (00:00 to 15:00).

(2) Put S701-1 on the SS-52 board to OFF (lower position) so that the tracking control volume can be operated.

(3) Turn RV700 on the SS-52 board clockwise and adjust the center portion of the RF envelope waveform so that it is 80% of the maximum output level.

(4) Turn the upper flange of TG-3 counterclockwise by one to two turns so that the tape does not come in contact with the upper flange of TG-3.

(5) Turn the upper flange of TG-4 clockwise so that the tape does not come in contact with the lower flange of TG-4.

(6) Turn the zenith adjustment screw of the audio/TC head and adjust the RF envelope waveform so that it is 0 to 30% of the maximum output level. (Fig. 1)

At this time, check that the tape never touch both the upper flange of TG-3 and the lower flange of TG-4.
If the tape touches either flanges, repeat step (4) or (5).
If the tape follows the flanges in step (4) or (5), perform the following adjustment because the symptom indicates the too much tension either at upper of lower part of the tape caused by audio/TC head zenith.

- If the tape follows the upper flange at TG-3: Turn the zenith adjustment screw counterclockwise.
- If the tape follows the lower flange at TG-4: Turn the zenith adjustment screw clockwise.

(7) Turn the upper flange of TG-3 so that it comes in contact with the tape and so that the RF envelope waveform is flat. (Fig. 2)
At that time, the tape does not contact with the lower flange of TG-4.

– To be continued. –

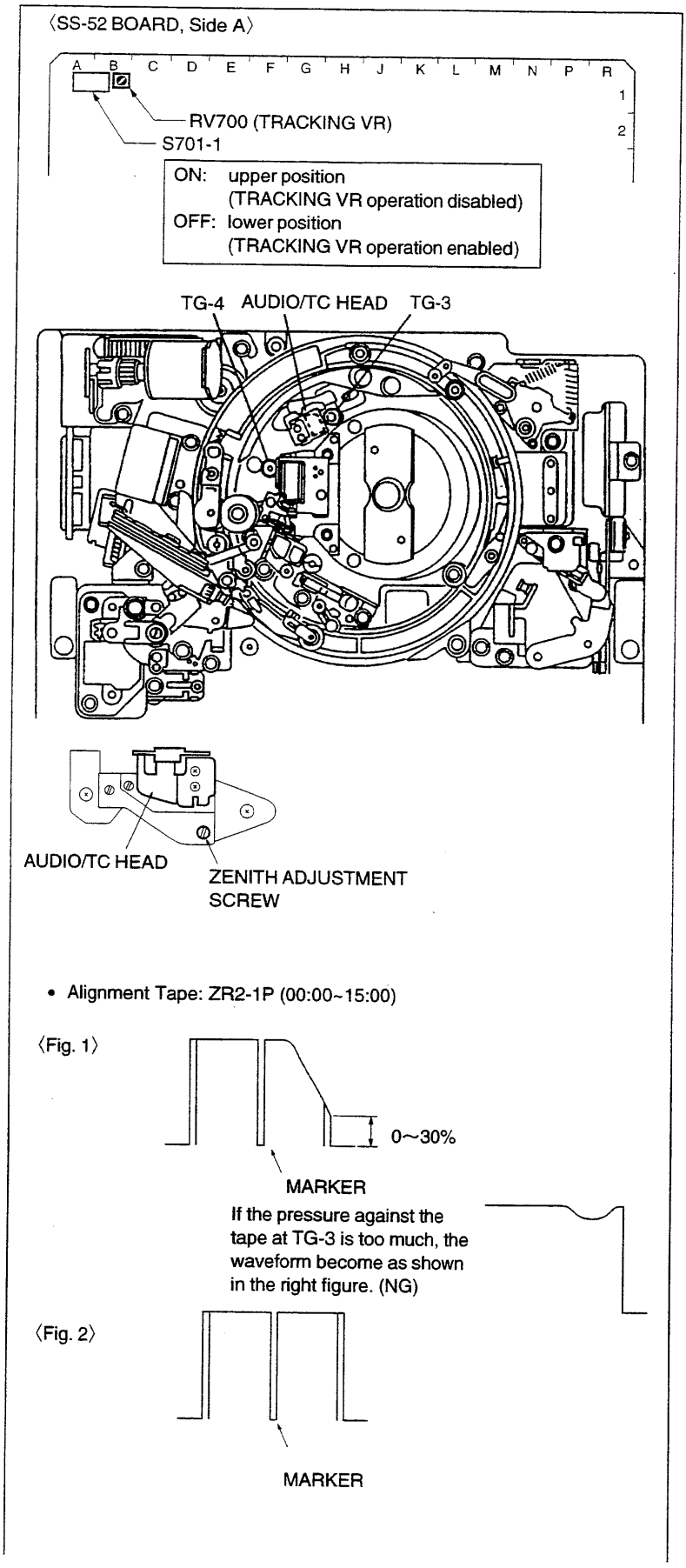

If the waveform is not flat, perform the check and adjustment below.

① Clean the drum lead with a bamboo stick. (Refer to Section 7-1-4.)

② Press down the tape by bamboo stick and check that the tape is running without aparting from the drum lead.

③ Adjust the height of TG-3 so that the RF envelope waveform is nearly flat within the range of the specification shown in the Fig.3. At this time, do not overpress the tape at TG-3.

(8) Adjust the height of TG-4 so that the lower flange of TG-4 comes in contact with the tape.

(9) Check the tape running at the drum exit side in the following modes.

- PLAY mode
- REV × 10 mode
- F.FWD mode
- REW mode
- REV × 1 mode
- VAR × –1/30 mode

If the tape curl does not satisfy the specification at TG-3, perform the following adjustments while observing the waveform.

① Change the zenith of the audio/TC head within the range of the specification shown in Fig. 1.

② Perform the tracking adjustment again. (Refer to step (1) through (9) mentioned above.)

20. Recheck the Video Tracking

Refer to steps 5 through 12. (Page 8-98 through 8-100)

21. Install the CL Guide Rail

Install the CL guide rail with two screws.

Caution

After adjustment is completed, be sure to put S701-1 on the SS-52 board to ON (upper position).

〈Fig. 3〉

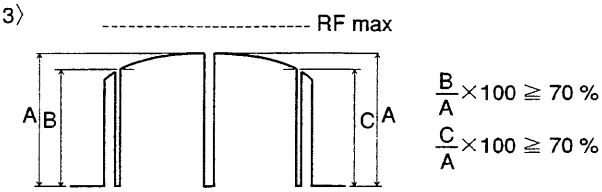

A = RF max × 0.8

〈Tape Running Check〉

Spec. 2: ⑤ LEAD OF DRUM EXIT SIDE
The tape runs without any curl at the lead.

⑥ TG-3 (EXIT GUIDE)
The tape runs in contact with the upper flange.
The tape curl is less than 1/10 of the tape width.

⑦ TG-4
The tape runs in contact with the lower flange.
The tape curl is less than 1/10 of the tape width.

⑧ TG-5 (THREADING ROLLER)
The tape runs without any curl at the upper and lower flanges.

Tracking Adjustment at Drum Exit Side

8-4-4. CTL Head Height Adjustment

Tools

- Alignment tape ZR2-1P: 8-960-073-61
- Oscilloscope
- Tape guide adjustment driver (MW-261): J-6322-610-A

Preparation

1. **Turn the Power Off**
2. **Connect the Oscilloscope**
   CH-1: TP800/SS-52 board (CTL signal)
   TRIG: TP819/SS-52 board (1/2 VD signal)
3. **Set the Alignment Tape**
   Set the ZR2-1P and put a weight on the cassette so that it does not rise up.

* Connection of the Oscilloscope

CH-1: TP800/SS-52 board (CTL signal)
TRIG: TP819/SS-52 board (1/2 VD signal)

〈SS-52 BOARD, Side A〉

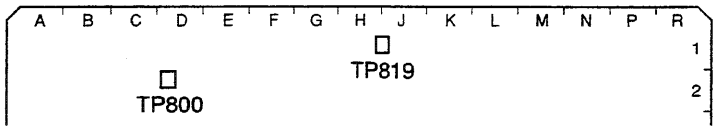

Preparation

Check

4. **Turn the Power On**
5. **Play Back the Alignment Tape**
   Play back the ZR2-1P.
6. **Check the CTL Head Height**
   (1) Check that the level decreases when portion A of the tape shown in the figure is pressed down.

   If the level increases, perform step 7.

   (2) Check that the level decreases when portion B of the tape is pushed up.

   If the level increases, perform step 8.

* Alignment Tape : ZR2-1P

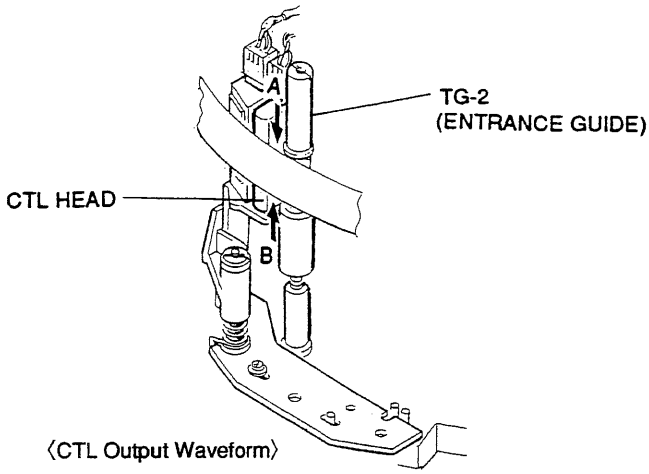

〈CTL Output Waveform〉

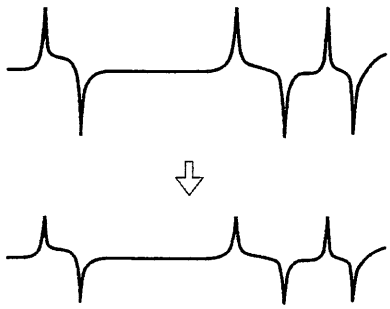

Spec.: The level decreases when pressing down and pushing up the alignment tape.

CTL Head Height Check

Adjustment

7. **In Case the Level Increases when the Tape is Pressed Down (Fig. 1)**
   Turn the adjustment nut counterclockwise and adjust so that the output waveform is maximum.

8. **In Case the Level Increases when the Tape is Pushed Up (Fig. 2)**
   Turn the adjustment nut clockwise and adjust so that the output waveform is maximum.

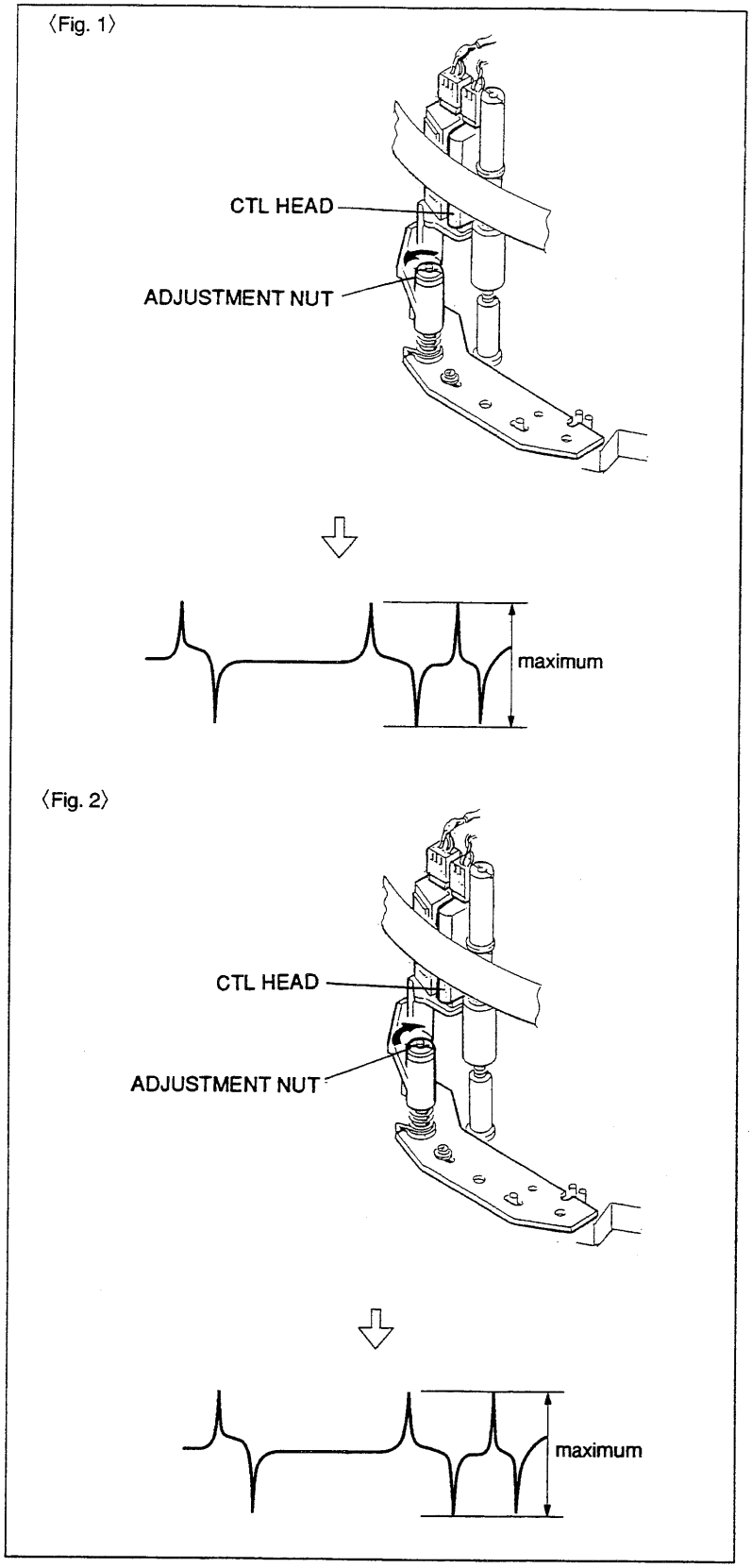

CTL Head Height Adjustment

8-4-5. CTL Head Position Adjustment

Note

The CTL head position adjustment is closely related to the audio/TC head position adjustment.
Be sure to confirm the audio/TC head position when the CTL head position is adjusted.

Tools

- Alignment tape ZR2-1P: 8-960-073-61
- Oscilloscope

Preparation

1. **Turn the Power Off**

2. **Connect the Oscilloscope**
   CH-1: TP2801/SS-52 board (SAT ENV signal)
   CH-2: TP819/SS-52 board (1/2 VD signal)
   CH-3: TP101/EQ-45 board (REC AC SEL signal)
   TRIG: TP819/SS-52 board (1/2 VD signal)

3. **Set the Alignment Tape**
   Set the ZR2-1P and put a weight on the cassette so that it does not rise up.

* Connection of the Oscilloscope

CH-1: TP2801/SS-52 board (SAT ENV signal)
CH-2: TP819/SS-52 board (1/2 VD signal)
CH-3: TP101/EQ-45 board (REC AC SEL signal)
TRIG: TP819/SS-52 board (1/2 VD signal)

⟨SS-52 BOARD, Side A⟩

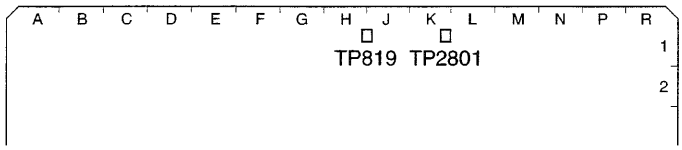

⟨EQ-45 BOARD, Side A⟩ (Board suffix No. 15 and later)

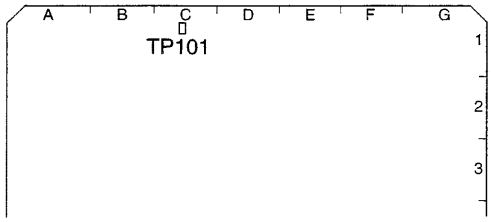

(Board suffix No. 11, 12, 13, 22, 23, 31, 41)

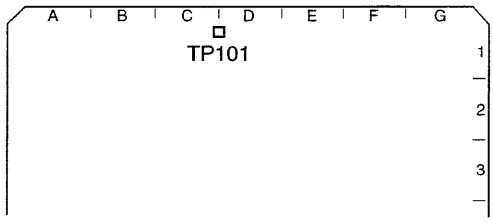

Preparation

Check

4. **Turn the Power On**

5. **Play Back the Alignment Tape**
   Play back the ZR2-1P (00:00 to 15:00).

6. **Check the CTL Head Position**
   (1) Put S701-1 on the SS-52 board to OFF (lower position) so that the tracking control volume can be operated.
   (2) Turn RV700 (tracking control volume) on the SS-52 board so that the output level in the center portion of the RF envelope waveform is maximum. At that time, check that the marker is located in the rising portion of 1/2 VD signal.
   (3) Put S701-1 on the SS-52 board to ON (upper position) and fix the tracking control volume.
   (4) Check that the output level in the center portion of the RF envelope waveform satisfies the specification.

   If the specification is not satisfied, perform steps 7 and later.

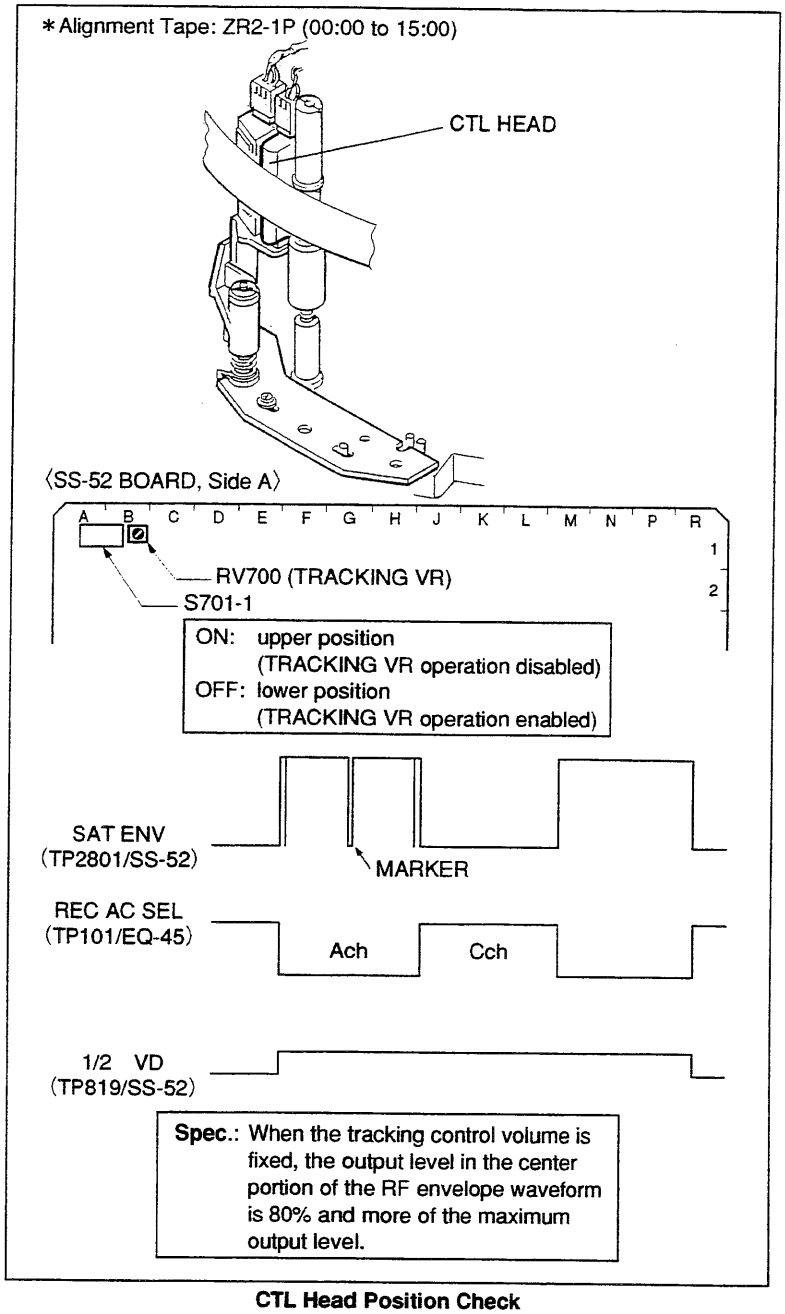

CTL Head Position Check

Adjustment

7. **Loosen the Screw**
   Loosen the fixing screw of the CTL/FE head assembly by 1/4 to 1/2 turn.

8. **Adjust the CTL Head Position**
   (1) Insert a 3 mm flatbladed screwdriver into the notch of the CTL/FE head assembly.
   (2) Adjust the CTL/FE head assembly position so that the output level in the center portion is maximum and the marker of RF envelope waveform is located in the rising portion of 1/2 VD signal.

9. **Tighten the Screw**
   Tighten the screw loosened in step 7.

10. **Recheck the CTL Head Position**
    Refer to steps 5 and 6.

In case the adjustment is performed

11. **Adjust the Audio/TC Head Position**
    Refer to Section 8-4-9.

Caution

After adjustment is completed, be sure to put S701-1 on the SS-52 board to ON (upper position).

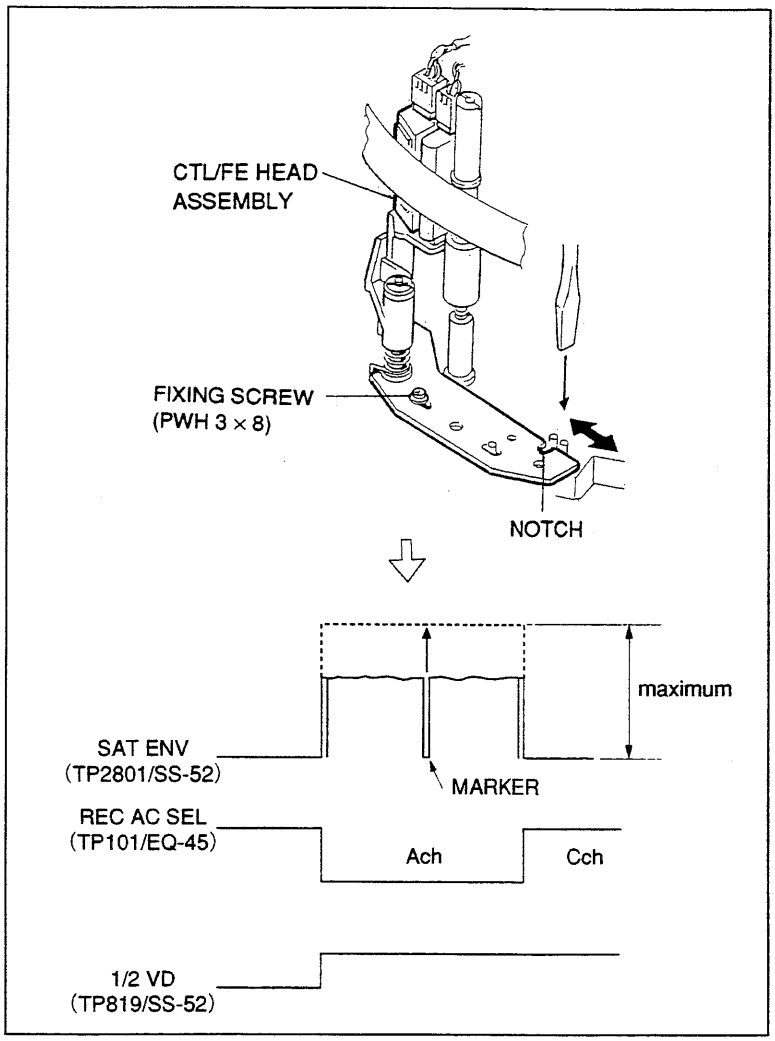

CTL Head Position Adjustment

8-4-6. Audio/TC Head Height Adjustment

For DVW-A500P

Note

The audio/TC head height adjustment is closely related to the azimuth adjustment, head-to-tape contact adjustment, and head position adjustment.
Be sure to perform adjustments (or checks) according to "In case the adjustment is performed" in this section when the audio/TC head height is adjusted.

Tools

- Alignment tape CR8-1A PS: 8-960-098-45
- Oscilloscope

Preparation

1. **Turn the Power Off**

2. **Connect the Oscilloscope**
   CH-1: TP103/AP-28 board (CH-1 PB signal)
   CH-2: TP203/AP-28 board (CH-2 PB signal)

3. **Set the Alignment Tape**
   Set the CR8-1A PS and put a weight on the cassette so that it does not rise up.

* Connection of the Oscilloscope

CH-1: TP103/AP-28 board (CH-1 PB signal)
CH-2: TP203/AP-28 board (CH-2 PB signal)

〈AP-28 BOARD, Side A〉

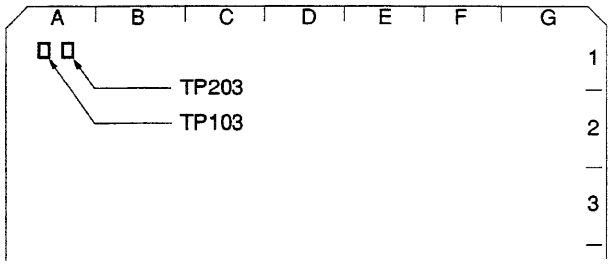

Preparation (DVW-A500P)

Check

4. **Turn the Power On**

5. **Play Back the Alignment Tape**
   Play back the 1 kHz, 0 VU signal portion (8:00 to 10:00) on the CR8-1A PS.

6. **Check the Audio/TC Head Height**
   (1) Check that both levels in CH-1 and CH-2 decrease when portion A of the tape shown in the figure is pressed down.

   If both levels increase, perform step 7.

   (2) Check that both levels in CH-1 and CH-2 decrease when portion B of the tape is pushed up.

   If both levels increase, perform step 8.

* Alignment Tape: CR8-1A PS(8:00 to 10:00)

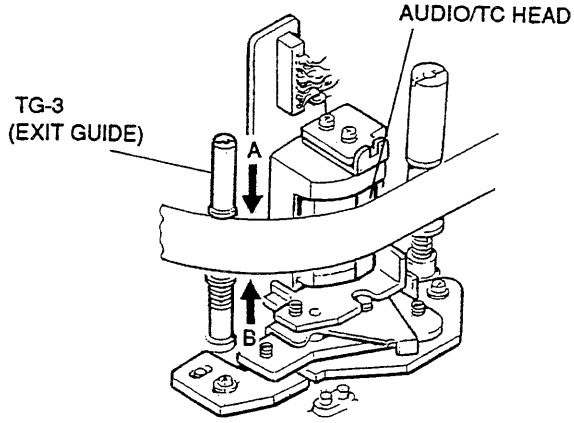

〈Audio Output Waveform〉

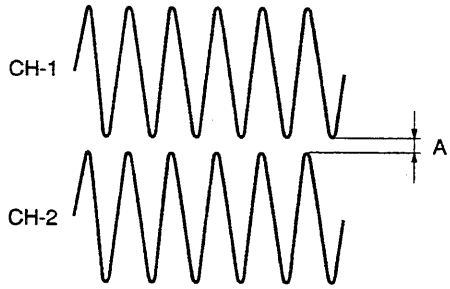

Spec. : The portion A widens when pressing down and pushing up the alignment tape.

Audio/TC Head Height Check (DVW-A500P)

Adjustment

7. **In Case both Levels Increase when the Tape is Pressed Down (Fig. 1)**
   Turn the height adjustment screw clockwise and adjust so that both output waveforms in CH-1 and CH-2 are maximum.

8. **In Case both Levels Increase when the Tape is Pushed Up (Fig. 2)**
   Turn the height adjustment screw counterclockwise and adjust so that both output waveforms in CH-1 and CH-2 are maximum.

In case the adjustment is performed

9. **Adjust the Audio/TC Head Azimuth**
   Refer to Section 8-4-7 (For DVW-A500P).

10. **Adjust the Audio/TC Head Head-to-tape Contact**
    Refer to Section 8-4-8 (For DVW-A500P).

11. **Check the Audio/TC Head Azimuth**
    Refer to Section 8-4-7 (For DVW-A500P).

12. **Adjust the Audio/TC Head Position**
    Refer to Section 8-4-9.

13. **Check the Audio/TC Head Height**
    Refer to steps 5 and 6 in this section.

14. **Check the Audio/TC Head Azimuth**
    Refer to Section 8-4-7 (For DVW-A500P).

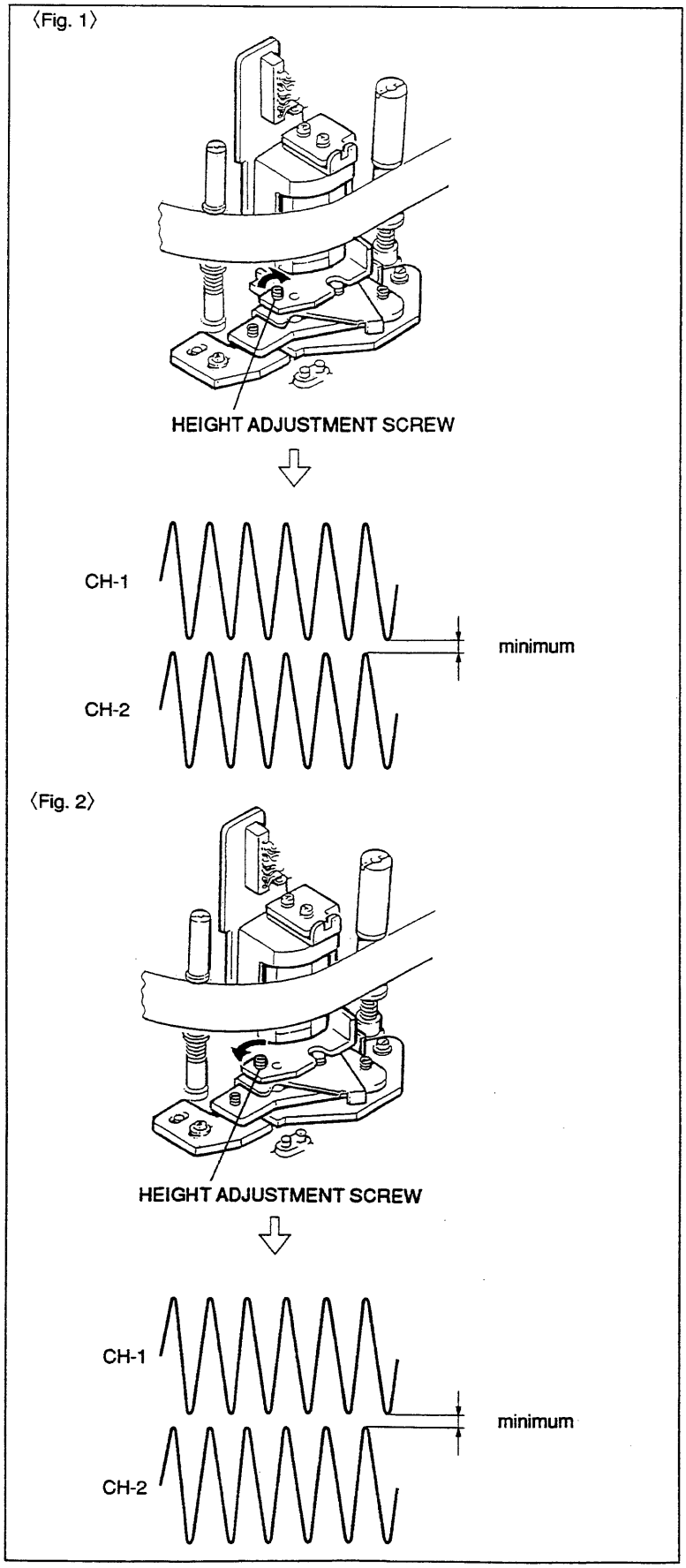

For DVW-500P

Note

The audio/TC head height adjustment is closely related to the azimuth adjustment, head-to-tape contact adjustment, and head position adjustment.
Be sure to perform adjustments (or checks) according to "In case the adjustment is performed" in this section when the audio/TC head height is adjusted.

Tools

- Alignment tape ZR2-1P: 8-960-073-61
- Oscilloscope

Preparation

1. **Turn the Power Off**

2. **Connect the Oscilloscope**
   CH-1: AUDIO OUTPUT CUE connector/ connector panel
   or
   TP701/CUE-1 board (CUE OUT signal)

3. **Play Back the Alignment Tape**
   Set the ZR2-1P and put a weight on the cassette so that it does not rise up.

Check

4. **Turn the Power On**

5. **Play Back the Alignment Tape**
   Play back the 1 kHz, 0 VU signal portion (00:00 to 15:00) on the ZR2-1P.

6. **Check the Audio/TC Head Height**
   (1) Check that the level decreases when portion A of the tape shown in the figure is pressed down.

   If the level increases, perform step 7.

   (2) Check that the level decreases when portion B of the tape is pushed up.

   If the level increases, perform step 8.

* Alignment Tape: ZR2-1P (00:00 to 15:00)

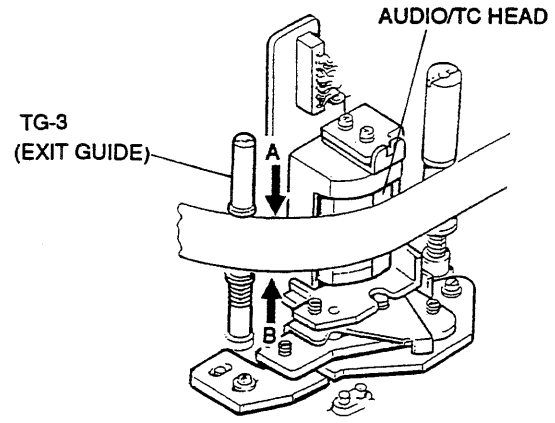

〈Cue Output Waveform〉

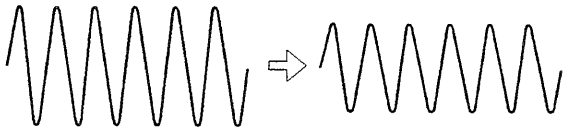

Spec. : The level decreases when pressing down and pushing up the alignment tape.

Audio/TC Head Height Check (DVW-500P)

Adjustment

7. **In Case the Level Increases when the Tape is Pressed Down (Fig. 1)**
   Turn the height adjustment screw clockwise and adjust so that the output waveform is maximum.

8. **In Case the Level Increases when the Tape is Pushed Up (Fig. 2)**
   Turn the height adjustment screw counterclockwise and adjust so that the output waveform is maximum.

In case the adjustment is performed

9. **Adjust the Audio/TC Head Azimuth**
   Refer to Section 8-4-7 (For DVW-500P).

10. **Adjust the Audio/TC Head Head-to-tape Contact**
    Refer to Section 8-4-8 (For DVW-500P).

11. **Check the Audio/TC Head Azimuth**
    Refer to Section 8-4-7 (For DVW-500P).

12. **Adjust the Audio/TC Head Position**
    Refer to Section 8-4-9.

13. **Check the Audio/TC Head Height**
    Refer to steps 5 and 6 in this section.

14. **Check the Audio/TC Head Azimuth**
    Refer to Section 8-4-7 (For DVW-500P).

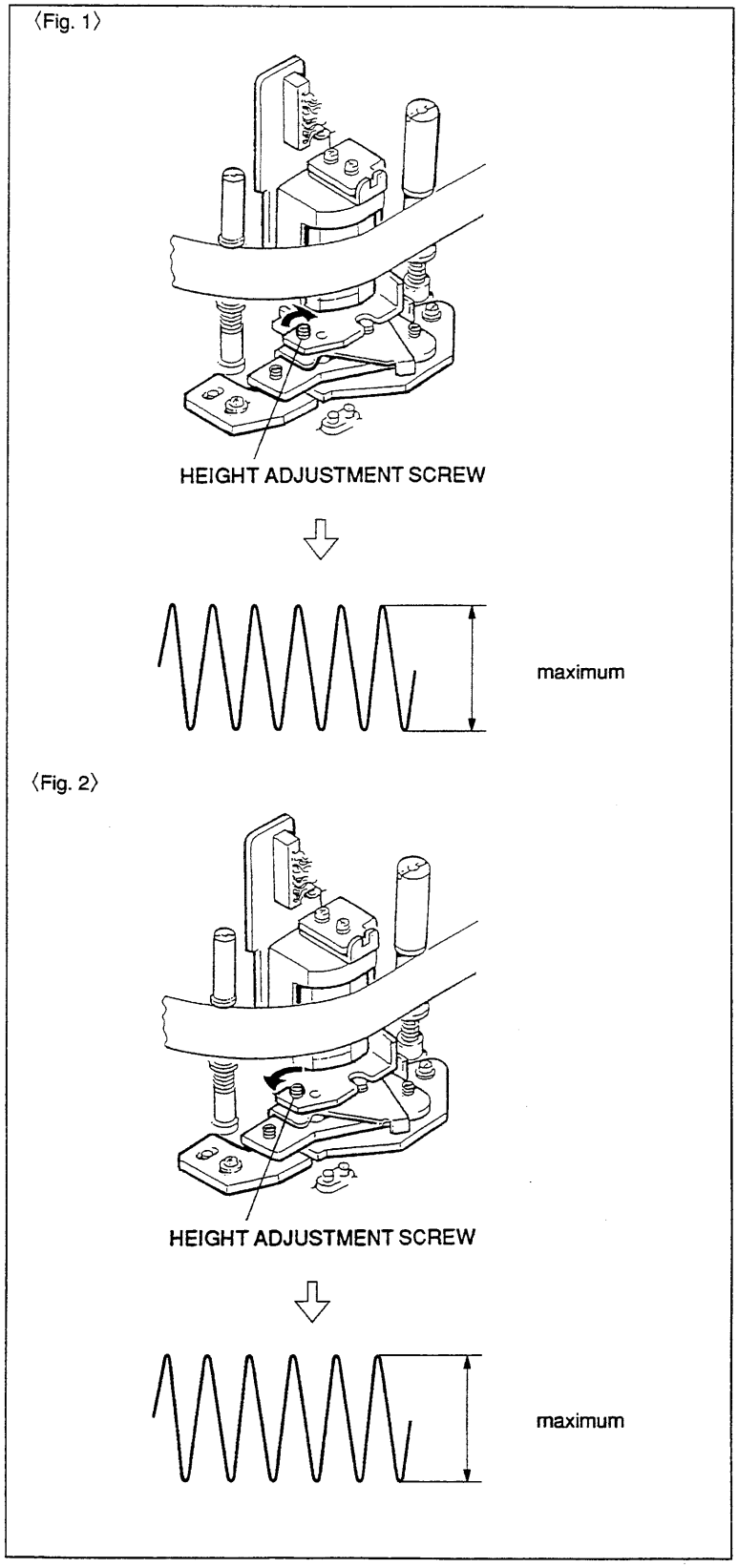

Audio/TC Head Height Adjustment (DVW-500P)

8-4-7. Audio/TC Head Azimuth Adjustment

For DVW-A500P

Note

The audio/TC head azimuth adjustment is closely related to the head-to-tape contact adjustment, head position adjustment, and head height adjustment.
Be sure to perform adjustments (or checks) according to "In case the adjustment is performed" in this section when the audio/TC head azimuth is adjusted.

Tools

- Alignment tape CR8-1A PS: 8-960-098-45
- Oscilloscope

Preparation

1. **Turn the Power Off**

2. **Connect the Oscilloscope**
   CH-1: TP103/AP-28 board (CH-1 PB signal)
   CH-2: TP203/AP-28 board (CH-2 PB signal)

3. **Set the Alignment Tape**
   Set the CR8-1A PS and put a weight on the cassette so that it does not rise up.

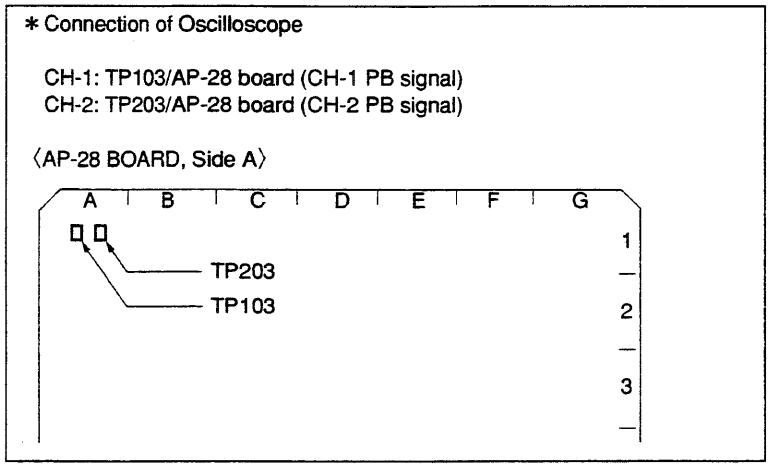

Preparation (DVW-A500P)

Check

4. Turn the Power On

5. Play Back the Alignment Tape
Play back the 10 kHz, -10 VU signal portion (3:00 to 4:55) on the CR8-1A PS.

6. Check the Audio/TC Head Azimuth
(1) Output a lissajous waveform so that the amplitudes in the horizontal and vertical directions are 6 cm each.
(2) Check that the vertical amplitude at the center point in the horizontal direction satisfies the specification.

If the specification is not satisfied, perform steps 7 and later.

(3) Strike the portions A and B shown in the figure lightly with the tip of a screwdriver. Then check that the specification is satisfied.

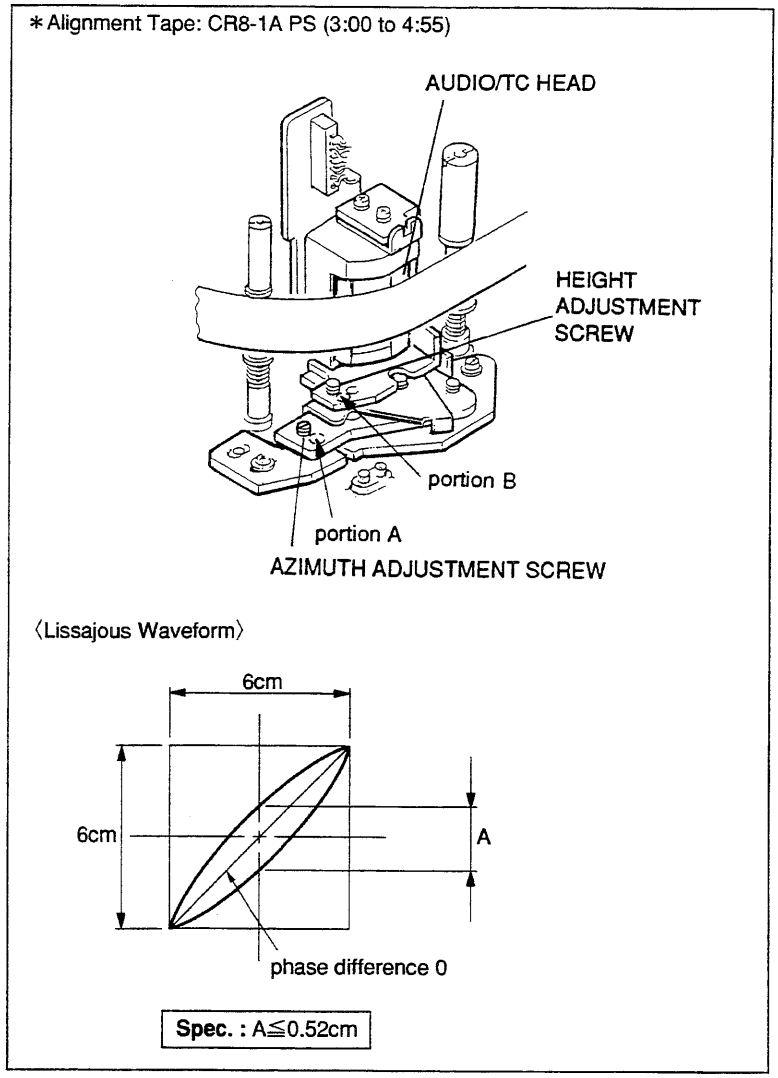

Audio/TC Head Azimuth Check (DVW-A500P)

Adjustment

7. **Adjust the Audio/TC Head Azimuth**
   (1) Turn the azimuth adjustment screw clockwise and adjust so that the specification is satisfied.

   (2) Strike the portions A and B shown in the figure lightly with the tip of a screwdriver. Then check that the specification is satisfied.

In case the adjustment is performed

8. **Adjust the Audio/TC Head Head-to-tape Contact**
   Refer to Section 8-4-8 (For DVW-A500P).

9. **Check the Audio/TC Head Azimuth**
   Refer to steps 5 and 6 in this section.

10. **Adjust the Audio/TC Head Position**
    Refer to Section 8-4-9.

11. **Check the Audio/TC Head Height**
    Refer to Section 8-4-6 (For DVW-A500P).

12. **Check the Audio/TC Head Azimuth**
    Refer to steps 5 and 6 in this section.

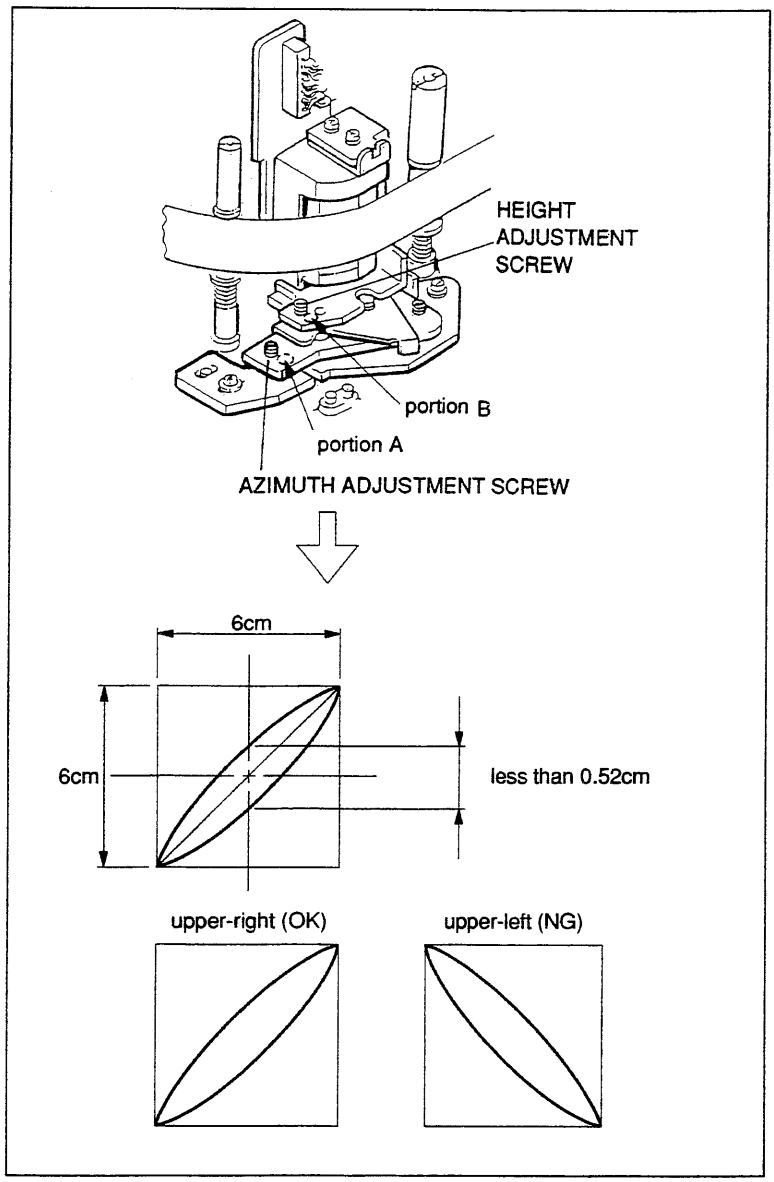

Audio/TC Head Azimuth Adjustment (DVW-A500P)

For DVW-500P

Note

The audio/TC head azimuth adjustment is closely related to the head-to-tape contact adjustment, head position adjustment, and head height adjustment.
Be sure to perform adjustments (or checks) according to "In case the adjustment is performed" in this section when the audio/TC head azimuth is adjusted.

Tools

- Alignment tape ZR2-1P: 8-960-073-61
- Oscilloscope

Preparation

1. **Turn the Power Off**

2. **Connect the Oscilloscope**
   CH-1: AUDIO OUTPUT CUE connector/ connector panel
   or
   TP701/CUE-1 board (CUE OUT signal)

3. **Set the Alignment Tape**
   Set the ZR2-1P and put a weight on the cassette so that it does not rise up.

Adjustment

4. **Turn the Power On**

5. **Play Back the Alignment Tape**
   Play back the 12 kHz, 0 VU signal portion (15:00 to 25:00) on the ZR2-1P.

6. **Adjust the Audio/TC Head Azimuth**
   (1) Turn the azimuth adjustment screw and adjust so that the output waveform is maximum.
   (2) Strike the portions A and B shown in the figure lightly with the tip of a screwdriver. Then the level remains maximum.

7. **Adjust the Audio/TC Head Head-to-tape Contact**
   Refer to Section 8-4-8 (For DVW-500P).

8. **Adjust the Audio/TC Head Position**
   Refer to Section 8-4-9.

9. **Check the Audio/TC Head Height**
   Refer to Section 8-4-6 (For DVW-500P).

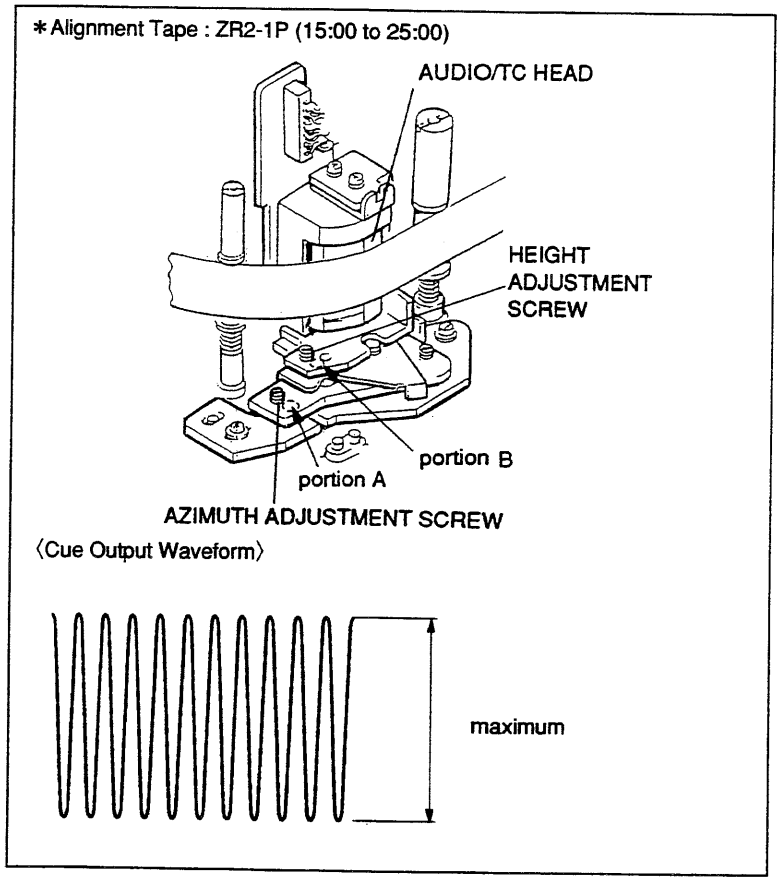

Audio/TC Head Azimuth Adjustment (DVW-500P)

8-4-8. Audio/TC Head Head-to-tape Contact Adjustment

For DVW-A500P

Note

The audio/TC head head-to-tape contact adjustment is closely related to the head position adjustment, head height adjustment, and head azimuth adjustment.
Be sure to perform adjustments (or checks) according to "In case the adjustment is performed" in this section when the audio/TC head head-to-tape contact is adjusted.

Tools

- Alignment tape CR8-1A PS: 8-960-098-45
- Oscilloscope

- Torque screwdriver (6 kg•cm) (JB-5251): J-6252-510-A
- Torque screwdriver's bit (+2 mm, l= 75 mm): J-6323-420-A

Preparation

1. **Turn the Power Off**

2. **Connect the Oscilloscope**
   CH-1: TP103/AP-28 board (CH-1 PB signal)
   CH-2: TP203/AP-28 board (CH-2 PB signal)

3. **Set the Alignment Tape**
   Set the CR8-1A PS and put a weight on the cassette so that it does not rise up.

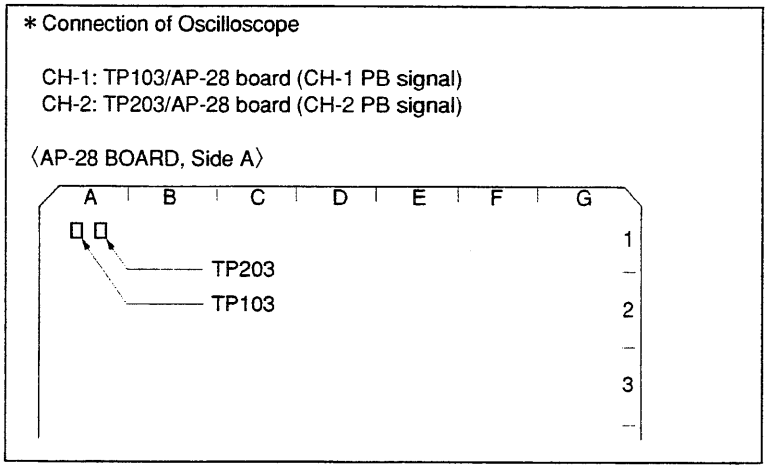

Preparation (DVW-A500P)

Check

4. **Turn the Power On**

5. **Play Back the Alignment Tape**
   Play back the 10 kHz, -10 VU signal portion (3:00 to 4:55) on the CR8-1A PS.

6. **Check the Audio/TC Head Head-to-tape Contact**
   (1) Push portions A and B of the tape shown in the figure slightly.
   (2) Check that both increase values of the output levels in CH-1 and CH-2 satisfy the specification.

   If the specification is not satisfied, perform step 7 and later.

* Alignment Tape : CR8-1A PS (3:00 to 4:55)

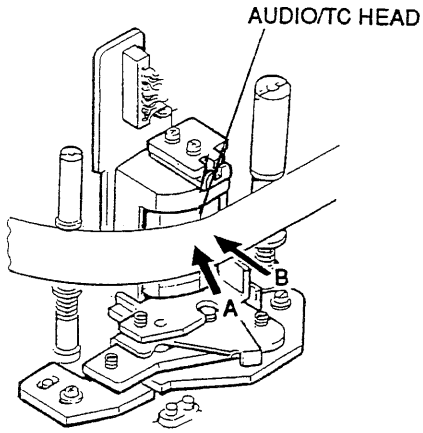

〈Audio Output Waveform〉

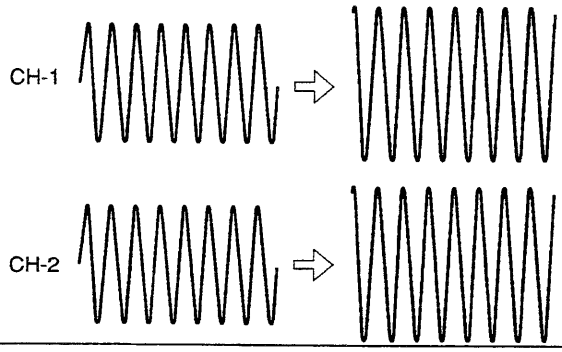

Spec. : Both increase values of the output levels in CH-1 and CH-2 are within 5%.

Audio/TC Head Head-to-tape Contact Check (DVW-A500P)

Adjustment

7. **Loosen the Screws**
   Loosen the two head fixing screws by 1/4 to 1/2 turn.

8. **Adjust the Audio/TC Head Head-to-tape Contact**
   (1) Insert a 2 mm flatbladed screwdriver into the notch of the adjustment plate.
   (2) Adjust the audio/TC head position so that the output waveform is maximum.

9. **Tighten the Screws**
   Tighten the two fixing screws loosened in step 7.

   Tightening torque: 19.6×10^{-2} N•m (2 kgf•cm)

10. **Recheck the Audio/TC Head Head-to-tape Contact**
    Refer to steps 5 and 6 in this section.

In case the adjustment is performed

11. **Check the Audio/TC Head Position**
    Refer to Section 8-4-9.

12. **Check the Audio/TC Head Height**
    Refer to Section 8-4-6 (For DVW-A500P).

13. **Check the Audio/TC Head Azimuth**
    Refer to Section 8-4-7 (For DVW-A500P).

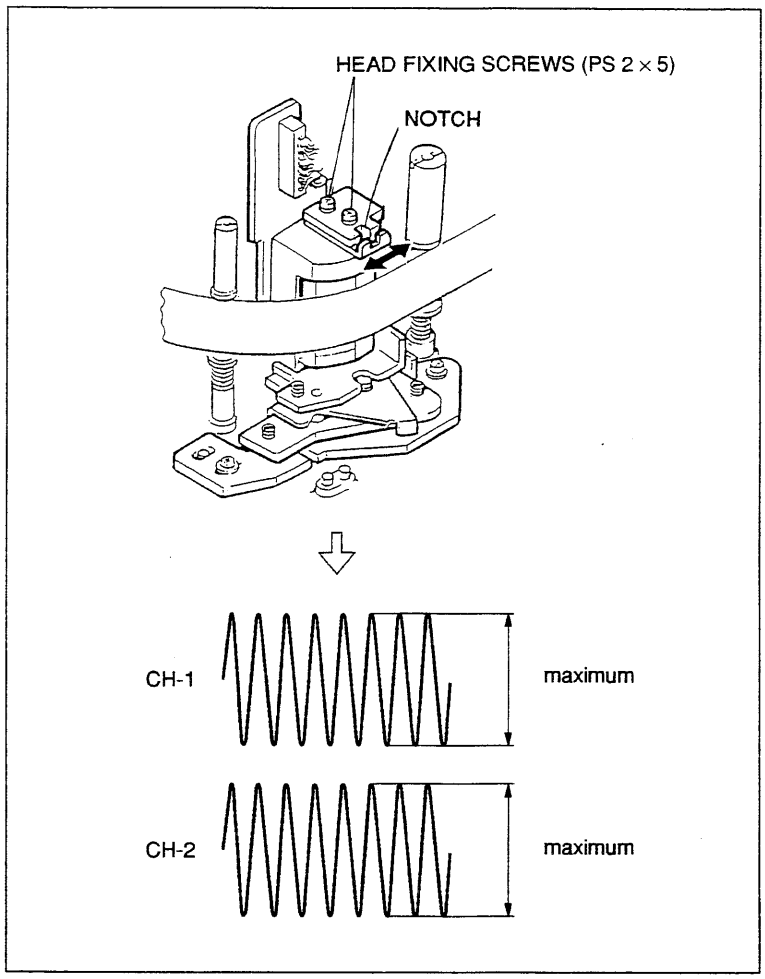

Audio/TC Head Head-to-tape Contact Adjustment (DVW-A500P)

For DVW-500P

Note

The audio/TC head head-to-tape contact adjustment is closely related to the head position adjustment, head height adjustment, and head azimuth adjustment.
Be sure to perform adjustments (or checks) according to "In case the adjustment is performed" in this section when the audio/TC head head-to-tape contact is adjusted.

Tools

- Alignment tape ZR2-1P: 8-960-073-61
- Oscilloscope

- Torque screwdriver (6 kg•cm)(JB-5251): J-6252-510-A
- Torque screwdriver's bit (+2 mm, l= 75 mm): J-6323-420-A

Preparation

1. **Turn the Power Off**

2. **Connect the Oscilloscope**
   CH-1: AUDIO OUTPUT CUE connector/ connector panel
   or
   TP701/CUE-1 board (CUE OUT signal)

3. **Set the Alignment Tape**
   Set the ZR2-1P and put a weight on the cassette so that it does not rise up.

Check

4. **Turn the Power On**

5. **Play Back the Alignment Tape**
   Play back the 12 kHz, 0 VU signal portion (15:00 to 25:00) on the ZR2-1P.

6. **Check the Audio/TC Head Head-to-tape Contact**
   (1) Push portions A and B of the tape shown in the figure slightly.
   (2) Check that the increase value in the output level satisfies the specification.

   If the specification is not satisfied, perform step 7 and later.

* Alignment Tape : ZR2-1P (15:00 to 25:00)

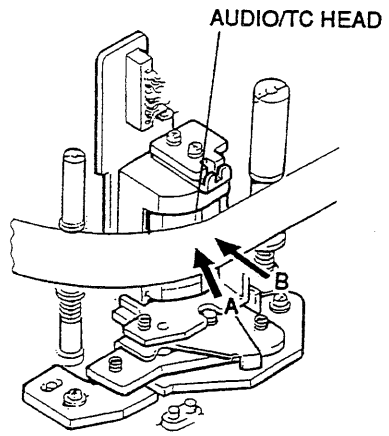

<Cue Output Waveform>

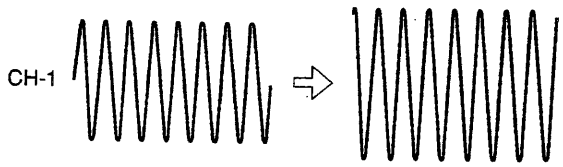

Spec. : The increase value of the output level is within 5%.

Audio/TC Head Head-to-tape Contact Check (DVW-500P)

Adjustment

7. **Loosen the Screws**
   Loosen the two head fixing screws by 1/4 to 1/2 turn.

8. **Adjust the Audio/TC Head Head-to-tape Contact**
   (1) Insert a 2 mm flatbladed screwdriver into the notch of the adjustment plate.
   (2) Adjust the audio/TC head position so that the output waveform is maximum.

9. **Tighten the Screws**
   Tighten the two fixing screws loosened in step 7.

   Tightening torque: 19.6×10^{-2} N•m (2 kgf•cm)

10. **Recheck the Audio/TC Head Head-to-tape Contact**
    Refer to steps 5 and 6 in this section.

In case the adjustment is performed

11. **Check the Audio/TC Head Position**
    Refer to Section 8-4-9.

12. **Check the Audio/TC Head Height**
    Refer to Section 8-4-6 (For DVW-500P).

13. **Check the Audio/TC Head Azimuth**
    Refer to Section 8-4-7 (For DVW-500P).

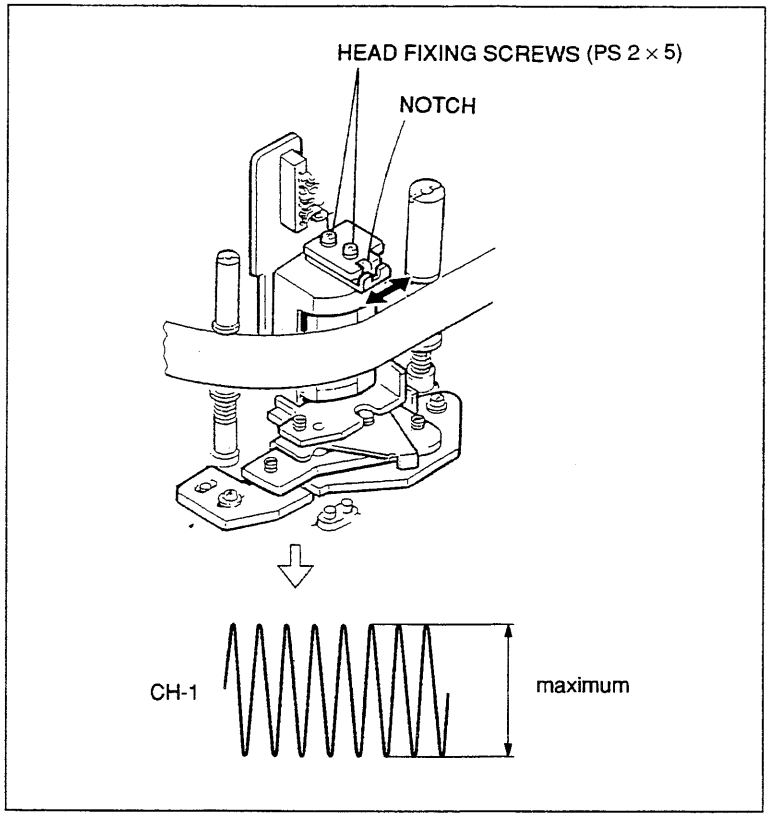

Audio/TC Head Head-to-tape Contact Adjustment (DVW-500P)

8-4-9. Audio/TC Head Position Adjustment

Notes

- The CTL head position adjustment must have been completed before performing this adjustment. The audio/TC head position is adjusted with the CTL head position as reference.
- The audio/TC head position adjustment is closely related to the head height adjustment, head azimuth adjustment, and head-to-tape contact adjustment.
  Be sure to perform adjustments (or checks) according to "In case the adjustment is performed" in this section when the audio/TC head position is adjusted.

Tools

- Alignment tape ZR2-1P: 8-960-073-61
- Oscilloscope

Preparation

1. **Turn the Power Off**

2. **Connect the Oscilloscope**
   CH-1: TP815/SS-52 board (CTL PULSE signal)
   CH-2: TP2800/SS-52 board (PB LTC signal)

3. **Set the Alignment Tape**
   Set the ZR2-1P and put a weight on the cassette so that it does not rise up.

Check

4. **Turn the Power On**

5. **Play Back the Alignment Tape**
   Play back the ZR2-1P (00:00 to 15:00).

6. **Check the Audio/TC Head Position**
   Check that the positional relationship between the rising edges of CTL and TC signals satisfies the specification.

   If the specification is not satisfied, perform steps 7 and later.

* Connection of the Oscilloscope

CH-1: TP815/SS-52 board (CTL PULSE signal)
CH-2: TP2800/SS-52 board (PB LTC signal)

〈SS-52 BOARD, Side A〉

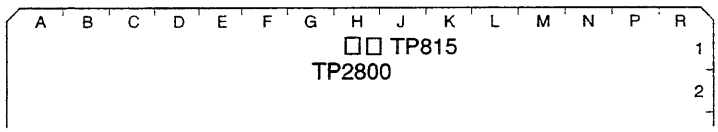

Preparation

* Alignment Tape: ZR2-1P (00:00 to 15:00)

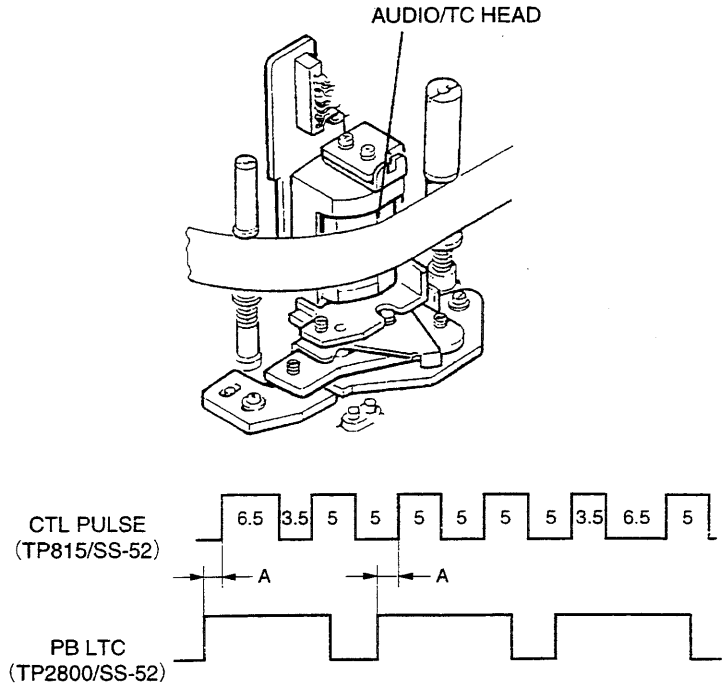

Spec.: A = 0 ± 400 µsec

Audio/TC Head Position Check

Adjustment

7. **Remove the CL Guide Rail**
   Remove the two screws, then remove the CL guide rail.

8. **Loosen the Screws**
   Loosen the two fixing screws of the audio/TC head assembly by 1/4 to 1/2 turn.

9. **Adjust the Audio/TC Head Position**
   (1) Insert a 3 mm flatbladed screwdriver into the notch of the audio/TC head assembly.
   (2) Adjust the audio/TC head assembly position so that the specification is satisfied.

10. **Tighten the Screws**
    Tighten the two screws loosened in step 8.

11. **Recheck the Audio/TC Head Position**
    Refer to steps 5 and 6 in this section.

12. **Install the CL Guide Rail**
    Install the CL guide rail with two screws.

In case the adjustment is performed

13. **Check the Audio/TC Head Height**
    Refer to Section 8-4-6 (For DVW-A500P or For DVW-500P).

14. **Check the Audio/TC Head Azimuth**
    Refer to Section 8-4-7 (For DVW-A500P or For DVW-500P).

15. **Check the Audio/TC Head Head-to-tape Contact**
    Refer to Section 8-4-8 (For DVW-A500P or For DVW-500P).

16. **Check the Audio/TC Head Position**
    Refer to steps 5 and 6 in this section.

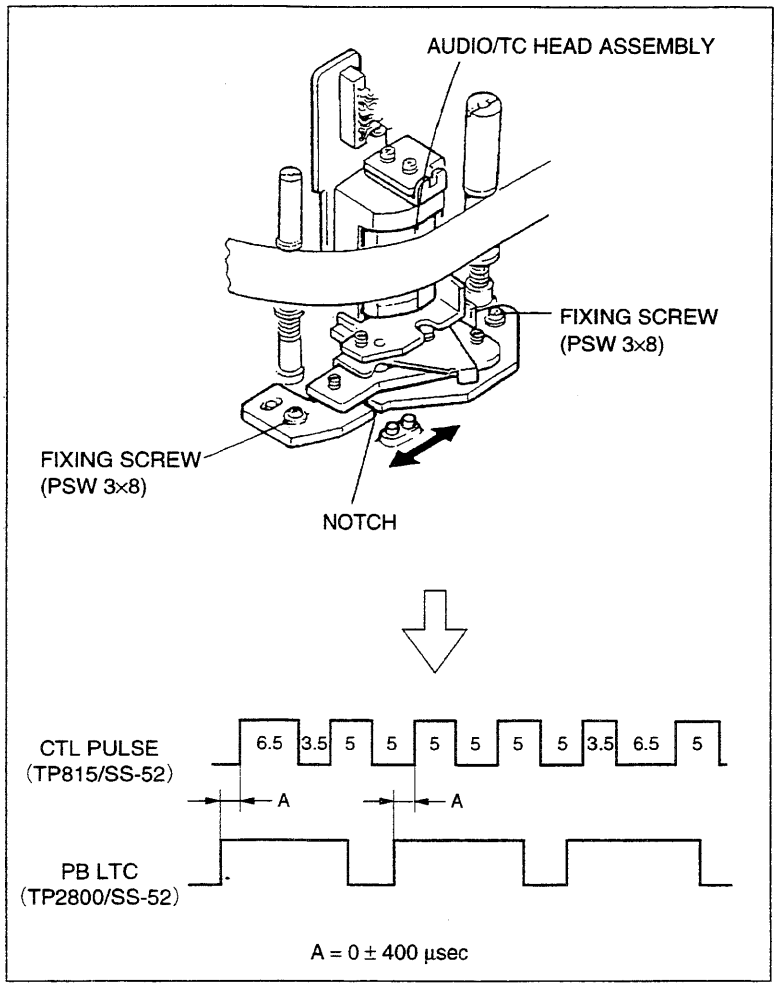

Audio/TC Head Position Adjustment

8-4-10. Audio Level Adjustment in REV Mode

For DVW-A500P

Tools

- Alignment tape CR8-1A PS: 8-960-098-45
- Oscilloscope

- Digital Betacam cassette BCT-D32 (S cassette)
- Adjustment mirror (circular): J-6080-029-A
- Tape guide adjustment driver (MW-261): J-6322-610-A

Preparation

1. **Turn the Power Off**

2. **Connect the Oscilloscope**
   CH-1: TP203/AP-28 board (CH-2 PB signal)

3. **Set the Alignment Tape**
   Set the CR8-1A PS and put a weight on the cassette so that it does not rise up.

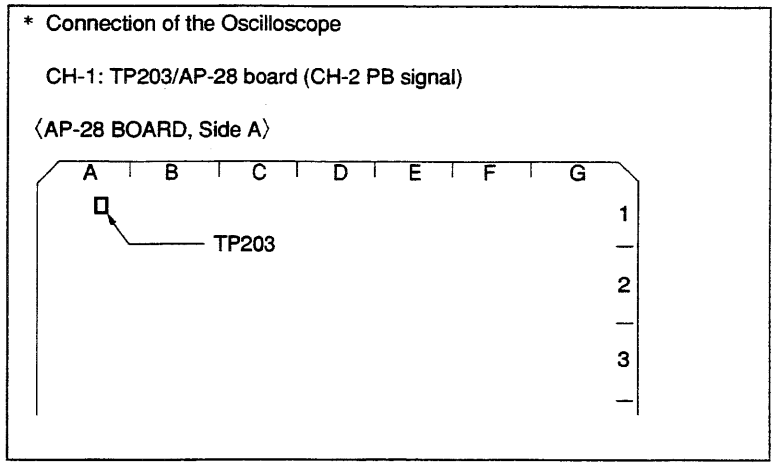

Preparation (DVW-A500P)

Check

4. **Turn the Power On**

5. **Play Back the Alignment Tape**
   Play back the 1 kHz, 0 VU signal portion (8:00 to 10:00) on the CR8-1A PS.

6. **Check the Audio Output Level**
   Check the audio output level A in CH-1.

7. **Put the Unit into the REV × 1 Mode**

8. **Check the Audio Output Level**
   Check that the audio output level B in CH-1 satisfies specification 1.

   If specification 1 is not satisfied, perform steps 9 and later.

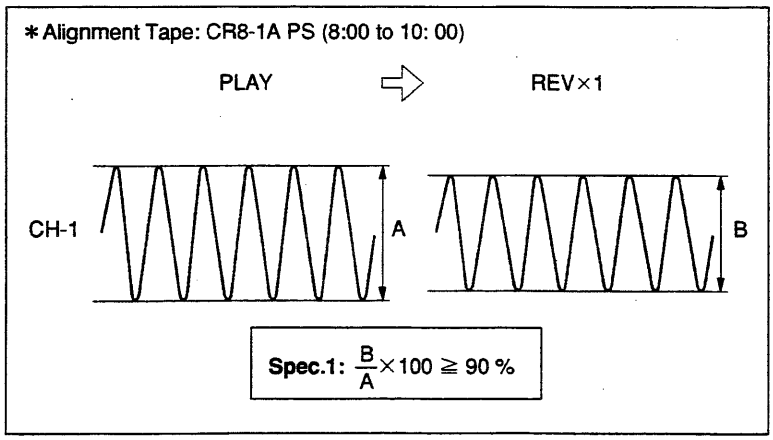

Audio Level Check in REV Mode (DVW-A500P)

Adjustment

9. Adjust the TG-5 (Threading Roller) Height

(1) Play back the 1 kHz, 0VU signal portion (8:00 to 10:00) on the CR8-1A PS.
(2) Put the unit into the REV x 1 mode.
(3) In case the level increases when portion A of the tape shown in the figure is pressed down, turn the upper flange of TG-5 clockwise using a tape guide adjustment driver.
In case the level increases when portion B is pushed up, turn the upper flange of TG-5 counterclockwise.
(4) Check the audio output level satisfies specification 1. (Refer to steps 5 through 8.)

If the specification 1 is not satisfied, repeat steps (1) through (4) mentioned above.

10. Check the Tape Running at Drum Exit Side

In the modes below, check that the tape running condition satisfies specification 2.
(1) PLAY mode
(2) REV × 10 mode
(3) REV × 1 mode

If specification 2 is not satisfied, adjust the tape guides height at the drum exit side. (Refer to steps 12 through 14 (at the Drum Exit Side) in Section 8-4-2.)

If the height of the tape guide is adjusted, perform the video tracking check. (Refer to Section 8-4-3.)

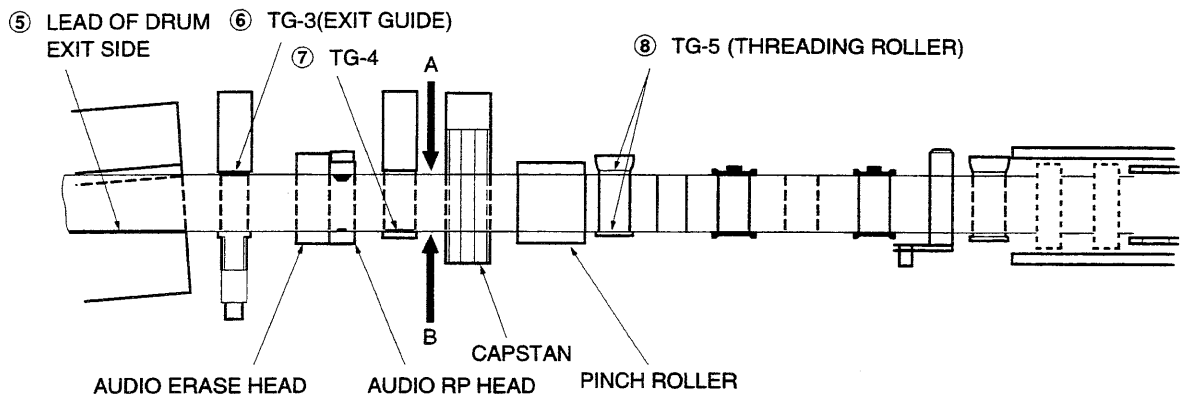

Spec. 2: ⑤ LEAD OF DRUM EXIT SIDE
The tape runs without any curl at the lead.

⑥ TG-3 (EXIT GUIDE)
The tape runs in contact with the upper flange.
The tape curl is less than 1/10 of the tape width.

⑦ TG-4
The tape runs in contact with the lower flange.
The tape curl is less than 1/10 of the tape width.

⑧ TG-5 (THREADING ROLLER)
The tape runs without any curl at the upper and lower flanges.

Audio Level Adjustment in REV Mode (DVW-A500P)

For DVW-500P

Tools

- Alignment tape ZR2-1P: 8-960-073-61
- Oscilloscope

- Digital Betacam cassette BCT-D32 (S cassette)
- Adjustment mirror (circular): J-6080-029-A
- Tape guide adjustment driver (MW-261): J-6322-610-A

Preparation

1. **Turn the Power Off**

2. **Connect the Oscilloscope**
   CH-1: AUDIO OUTPUT CUE connector/ connector panel
   or
   TP701/CUE-1 board (CUE OUT signal)

3. **Set the Alignment Tape**
   Set the ZR2-1P and put a weight on the cassette so that it does not rise up.

Check

4. **Turn the Power On**

5. **Play Back the Alignment Tape**
   Play back the 1 kHz, 0 VU signal portion (00:00 to 15:00) on the ZR2-1P.

6. **Check the Cue Output Level**
   Check the cue output level A.

7. **Put the Unit into the REV × 1 Mode**

8. **Check the Cue Output Level**
   Check that the cue output level B satisfies specification 1.

   If specification 1 is not satisfied, perform steps 9 and later.

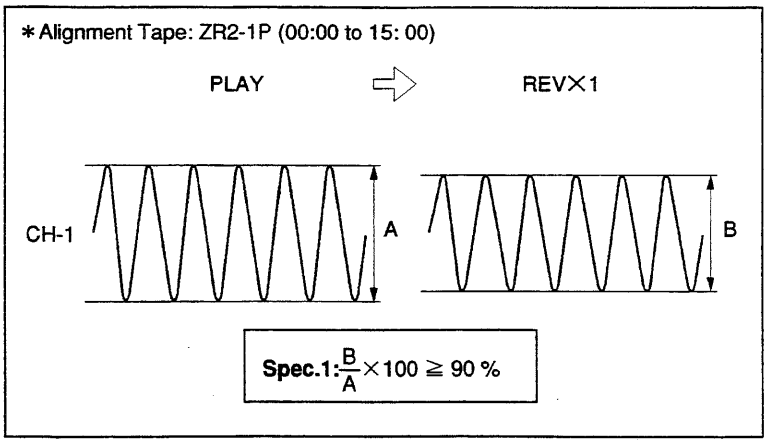

Audio Level Check in REV Mode (DVW-500P)

Adjustment

9. Adjust the TG-5 (Threading Roller) Height

(1) Play back the 1 kHz, 0VU signal portion (00:00 to 15:00) on the ZR2-1P.
(2) Put the unit into the REV x 1 mode.
(3) In case the level increases when portion A of the tape shown in the figure is pressed down, turn the upper flange of TG-5 clockwise using a tape guide adjustment driver.
In case the level increases when portion B is pushed up, turn the upper flange of TG-5 counterclockwise.
(4) Check the cue output level satisfies specification 1. (Refer to steps 5 through 8.)

If the specification 1 is not satisfied, repeat steps (1) through (4) mentioned above.

10. Check the Tape Running at Drum Exit Side

In the modes below, check that the tape running condition satisfies specification 2.
(1) PLAY mode
(2) REV × 10 mode
(3) REV × 1 mode

If specification 2 is not satisfied, adjust the tape guides height at the drum exit side. (Refer to steps 12 through 14 (at the Drum Exit Side) in Section 8-4-2.)

If the height of the tape guide is adjusted, perform the video tracking check.
(Refer to Section 8-4-3.)

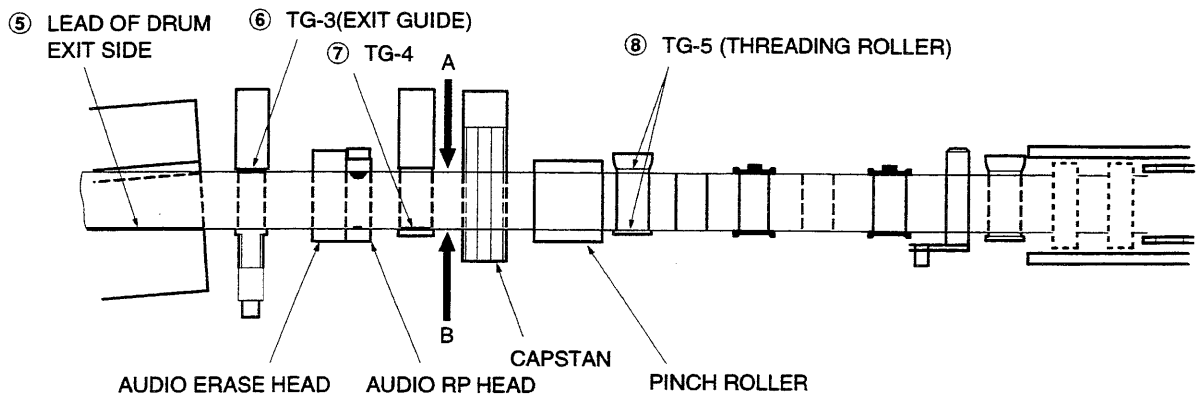

Spec. 2: ⑤ LEAD OF DRUM EXIT SIDE
The tape runs without any curl at the lead.

⑥ TG-3 (EXIT GUIDE)
The tape runs in contact with the upper flange.
The tape curl is less than 1/10 of the tape width.

⑦ TG-4
The tape runs in contact with the lower flange.
The tape curl is less than 1/10 of the tape width.

⑧ TG-5 (THREADING ROLLER)
The tape runs without any curl at the upper and lower flanges.

Audio Level Adjustment in REV Mode (DVW-500P)

Parts Location of the Tape Running System

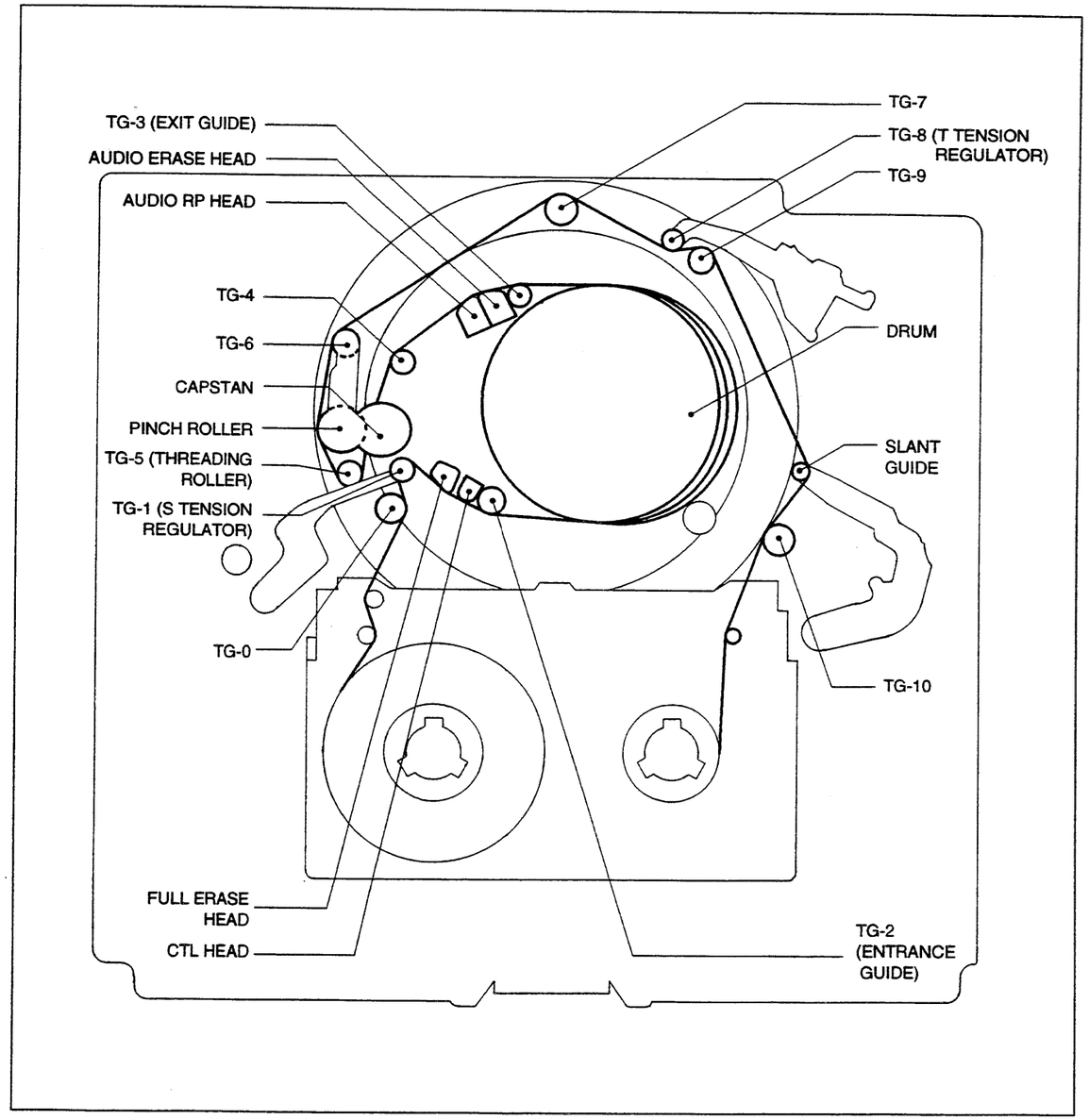

8-5. SERVO/DT AND RF ADJUSTMENT

Adjustment of each item is performed by using maintenance mode. Refer to section 5 for how to operate the maintenance mode.

[Equipment]

- Analog Composite Signal Generator (TEKTRONIX TSG-271 or equivalent)
- Analog Component Signal Generator (TEKTRONIX TSG-300 or equivalent)
- Blank Tape
  Note : "Blank Tape" indicates a cassette tape on which no video/audio signals are recorded.
- Alignment Tape ZR2-1P (Part No. 8-960-073-61)
- Alignment Tape ZR5-1P (Part No. 8-960-073-51)
- Alignment Tape CR5-1B PS (Part No. 8-960-096-91)

Alignment Tape ZR2-1P (Part No. 8-960-073-61)
Contents

TIME min.:sec.	CTL TRACK	CUE TRACK	VIDEO/AUDIO TRACK
00 : 00 ↑ (7 : 3 PULSE) ↓ 15 : 00	CTL	1 kHz, 0 VU	4 MHz (A CH only)
15 : 00 – 20 : 00	CTL	12 kHz, 0 VU	A,C CH - 4 MHz B,D CH - 8 MHz
20 : 00 – 25 : 00	CTL	12 kHz, 0 VU	16 MHz (All CH)
25 : 00 – 27 : 00	CTL	———	50% FLAT FIELD (All CH)

Alignment Tape CR5-1B PS (Part No. 8-960-096-91)
Contents

TIME min.:sec.	VIDEO TRACK	AFM	CTL
0 : 00 – 2 : 00	RF Sweep	No Signal	CTL
2 : 00 – 5 : 00	60% H Sweep (CTDM)	No Signal	CTL
5 : 00 – 8 : 00	Pulse & Bar (CTDM)	No Signal	CTL
8 : 00 – 11 : 00	60% Multi Burst	No Signal	CTL
11 : 00 – 14 : 00	Pulse & Bar	No Signal	CTL
14 : 00 – 16 : 30	100% Color Bars	400 Hz SINE WAVE 25 kHz DEVIATION	CTL
16 : 30 – 17 : 00	100% Color Bars	75 kHz DEVIATION	CTL
17 : 00 – 19 : 00	50% Bowtie & 10T	No Signal	CTL
19 : 00 – 22 : 00	Line 17 Signal	No Signal	CTL
22 : 00 – 24 : 00	Quad Phase	No Signal	CTL
24 : 00 – 26 : 00	Flat Field	No Signal	CTL
26 : 00 – 28 : 00	100% Color Bars with Dropout	No Signal	CTL
28 : 00 – 30 : 00	Composite H Sweep with VISC	No Signal	CTL

Alignment Tape ZR5-1P (Part No. 8-960-073-51)

Contents

TIME min.:sec.	CTL	VIDEO	D-AUDIO	CUE	TIME min.:sec.
00 : 00					00 : 00
		Color Bars (100%)	1 kHz -20 dB FS	1 kHz 0 VU	
				Blank	01 : 25
					01 : 30
02 : 00				1 kHz -20 VU	
					02 : 25
				Blank	02 : 30
				3 kHz -20 VU	
					02 : 55
				Blank	03 : 00
			1 kHz 0 dB FS	7 kHz -20 VU	
					03 : 25
				Blank	03 : 30
				10 kHz -20 VU	
					03 : 55
				Blank	04 : 00
04 : 00					
				12 kHz -20 VU	
					04 : 25
				Blank	04 : 30
			-∞ dB FS	90 Hz -20 VU	
					04 : 55
				Blank	05 : 00
06 : 00					
			20 Hz -20 dB FS	Repeat	
08 : 00					
			20 kHz -20 dB FS		
10 : 00					10 : 00
		Ramp	Repeat	Repeat	
20 : 00					20 : 00

[Switch Setting]

Upper/Lower Control Panel

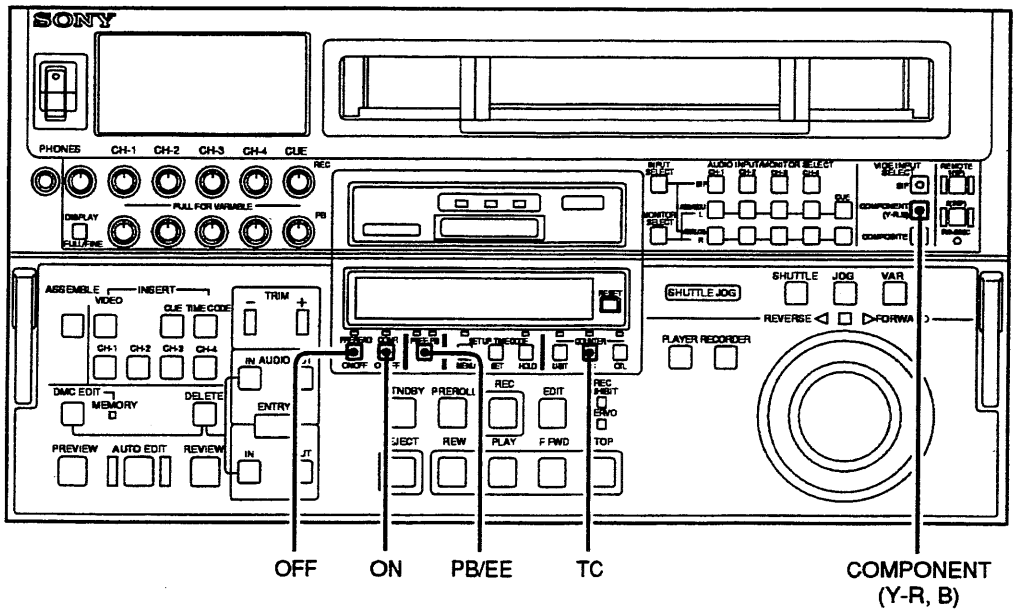

Sub Control Panel

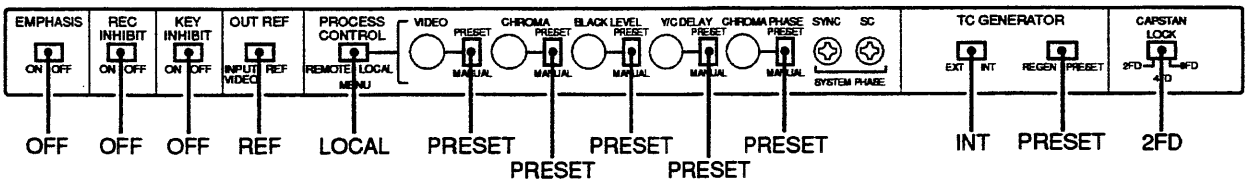

System Setup Panel

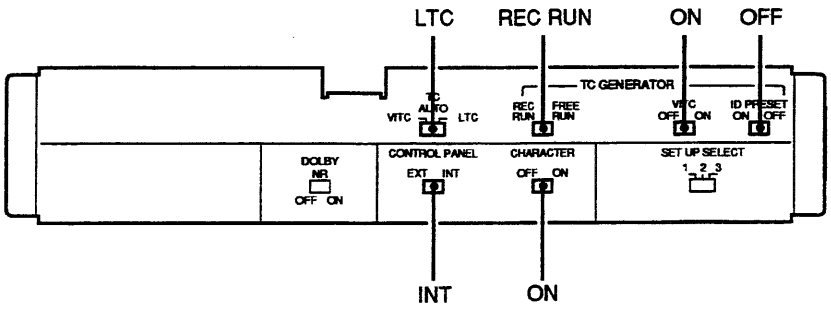

How to operate the maintenance mode

Push ⑧ S300(DIAG/ADJUST 1) (M-1) on the SS-52 board to enter the maintenance mode.

How to enter the next menu:

Press the ⑥ JOG button once. (Enters JOG mode.)
Turn the ⑦ search dial to move the ∗ mark to a desired item.
Press the ③ SET button.

How to exit the current menu or the maintenance mode:

Press the ② MENU button.

How to operate a tape (e.g. PLAY) in the manual adjustment or other items:

Press the ③ SET button to exit the maintenance mode temporarily. (A tape can be operated in this condition.)
Press the ② MENU button to return to the maintenance mode.

How to change the data (adjust the level) manually:

Turn the ⑦ search dial to move the ∗ mark to the item wishing to be adjusted.
Turn the ⑦ search dial while pressing the ⑥ JOG button.

How to save the data:

Turn the ⑦ search dial to move the ∗ mark to "A??: NV-RAM CONTROL".
Press the ③ SET button.
Turn the ⑦ search dial to move the ∗ mark to "SAVE ALL ADJUST DATA".
Press the ③ SET button.

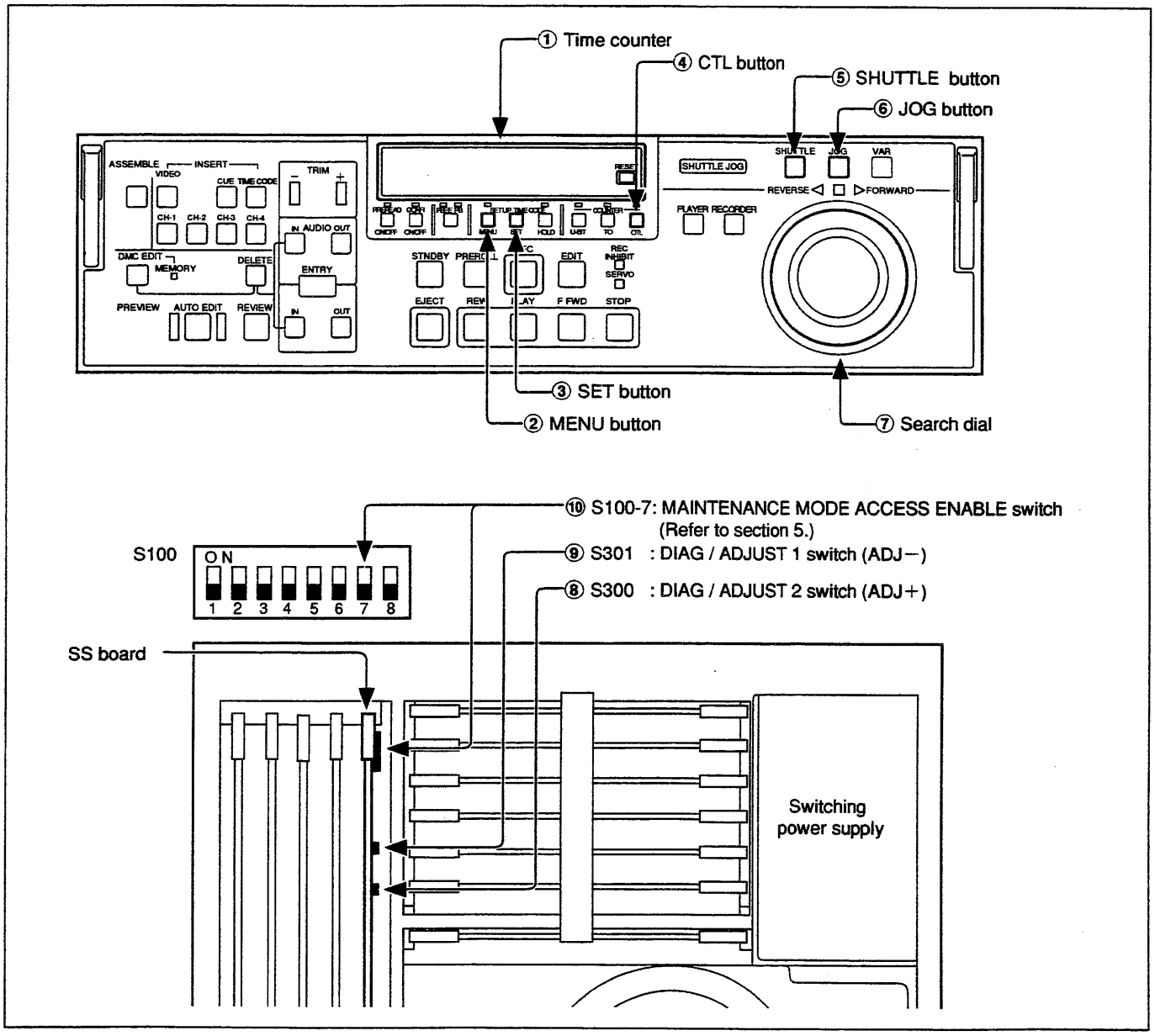

8-5-1. Drum Phase Adjustment

(1) Prepare the alignment tape ZR2-1P which is cue upped the 00:25:00:00 portion by the time code.

(2) Press S300 switch on the SS-52 board to enter the maintenance mode.

(3) Move the * mark to "A0 : SERVO/DT ADJUST" by the search dial.

(4) Press the SET button to enter "A0 : SERVO/DT ADJUST" mode.

From this time on, operate the menu in the same way.

(5) Enter "A00-01 : SERVO ADJUST" menu.

(6) Enter "A011 : RF SWITCHING POS.".

(7) Select "AUTO" by turning the search dial while pressing the JOG button.

(8) Insert the alignment tape ZR2-1P as instructed by monitor display and execute the automatic adjustment.

(9) After adjustment is completed, "ADJUST COMPLETE" is displayed.

(10) Press the MENU button to return to the SERVO ADJUST display.

(11) Enter "A012 : NV-RAM CONTROL" menu.

(12) Select "SAVE SERVO ADJUST DATA".

(13) After adjustment data are saved in NV-RAM completely, "DATA SAVED" is displayed.

(14) Press the MENU button several times to return to the operation mode.

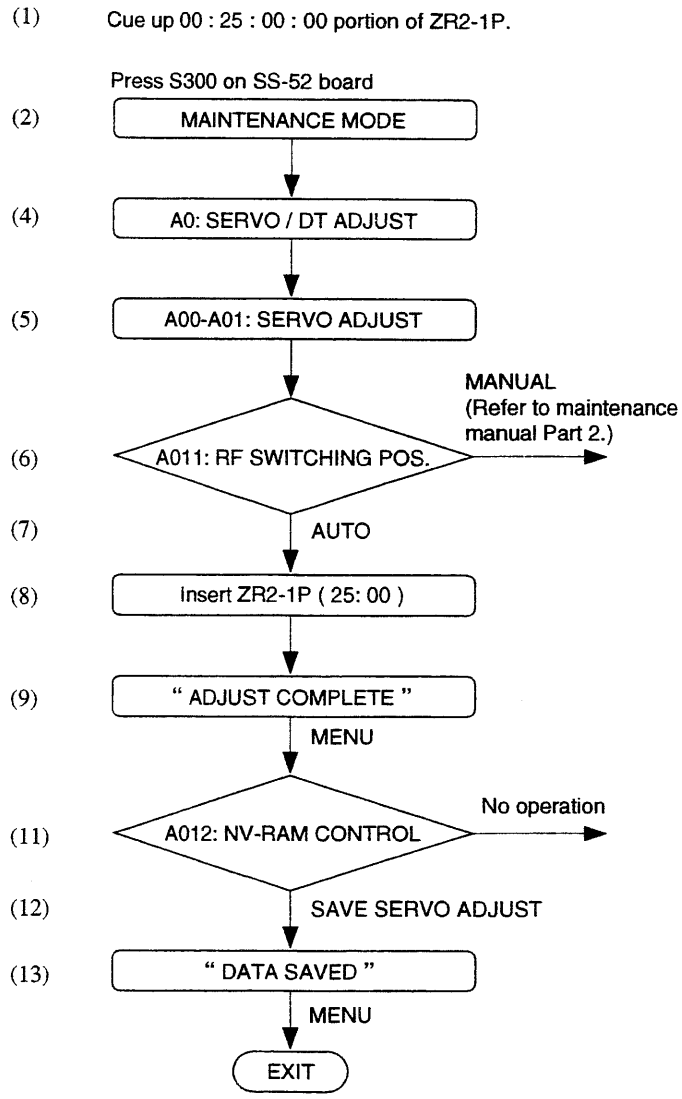

Note

When adjustment is incomplete at "A011 : RF SWITCH POS", error message is displayed. As for error message, refer to section 5-7-1. Servo System Adjustment Mode.

8-5-2. Digital DT Adjustment

(1) Insert the alignment tape ZR5-1P.

(2) Press S300 switch on the SS-52 board to enter the maintenance mode.

(3) Move the * mark to "A0 : SERVO/DT ADJUST" by the search dial.

(4) Press the SET button to enter "A0 : SERVO/DT ADJUST" mode.

From this time on, operate the menu in the same way.

(5) Enter "A02 : DIGITAL DT ADJUST" menu.

(6) Enter "A021 : DRIVE GAIN".

(7) Select "Start auto adjust".

(8) Put the unit into the STILL mode by pressing the JOG button as instructed by monitor display.

(9) After adjustment is completed, "ADJUST COMPLETE" is displayed.

(10) Press the MENU button to return to the DIGITAL ADJUST display.

(11) Enter "A022:HEAD OFFSET LEVEL".

(12) Select "Start auto adjust".

(13) Put the unit into the PLAY mode by pressing the PLAY button as instructed by monitor display.

(14) After adjustment is completed, "ADJUST COMPLETE" is displayed.

(15) Press the MENU button to return to DIGITAL ADJUST display.

(16) Enter "A023 : NV-RAM CONTROL".

(17) Execute "SAVE DIGITAL DT ADJUST".

(18) After adjustment data are saved in NV-RAM completely, "DATA SAVED" is displayed.

(19) Press the MENU button several times to return to the operation mode.

Note

When adjustment is incomplete at "A021 : DRIVE GAIN" or "A022 : HEAD OFFSET LEVEL", "ADJUST INCOMPLETE" is displayed. Refer to section 5-2-6. Digital DT System Check.

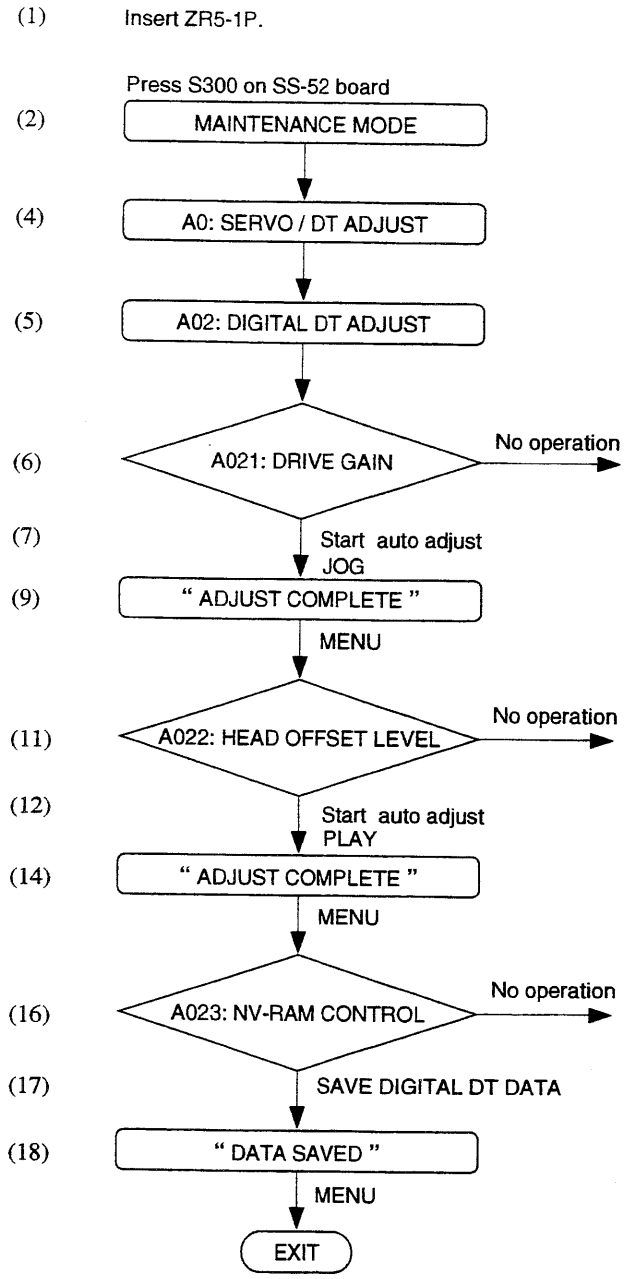

8-5-3. Analog DT Adjustment (For DVW-A500P/A510P/CA510P)

(1) Insert the alignment tape CR5-1B PS, and cue up the color bars signal portion (00:14:00:00).

(2) Press the S300 switch on the SS-52 board to enter the maintenance mode.

(3) Move the * mark to " A0 : SERVO/DT ADJUST" by the search dial.

(4) Press the SET button to enter " A0 : SERVO/DT ADJUST".

From this time on, operate the menu in the same way.

(5) Enter "A03 : ANALOG DT ADJUST" menu.

(6) Enter "A030 : HEAD OFFSET LEVEL".

(7) Select "Start auto adjust".

(8) Put the unit into the PLAY mode by pressing the PLAY button as instructed by monitor display.

(9) After adjustment is completed, "ADJUST COMPLETE" is displayed.

(10) Press the MENU button to return to ANALOG DT ADJUST display.

(11) Enter "A031 : DRIVE GAIN".

(12) Select "Start auto adjust".

(13) Set to VAR+3 times speed mode as instructed by monitor display, (Press VAR button on the control panel and turn the search dial clockwise.)

(14) After adjustment is completed, "ADJUST COMPLETE" is displayed.

(15) Press the JOG button on the control panel.

(16) Press the MENU button to return to ANALOG DT ADJUST display.

(17) Enter "A032 : NV-RAM CONTROL".

(18) Select "SAVE ANALOG DT DATA".

(19) After adjustment data are saved in NV-RAM completely, "DATA SAVED" is displayed.

(20) Press the MENU button several times to return to the operation mode.

Note

- Never eject the tape untill the data saved. If ejecting, re-adjust.
- When adjustment is incomplete at "A030 : HEAD OFFSET LEVEL", or "A031 : DRIVE GAIN", "ADJUST INCOMPLETE" is displayed. Refer to section 5-2-7. Analog DT System Check.

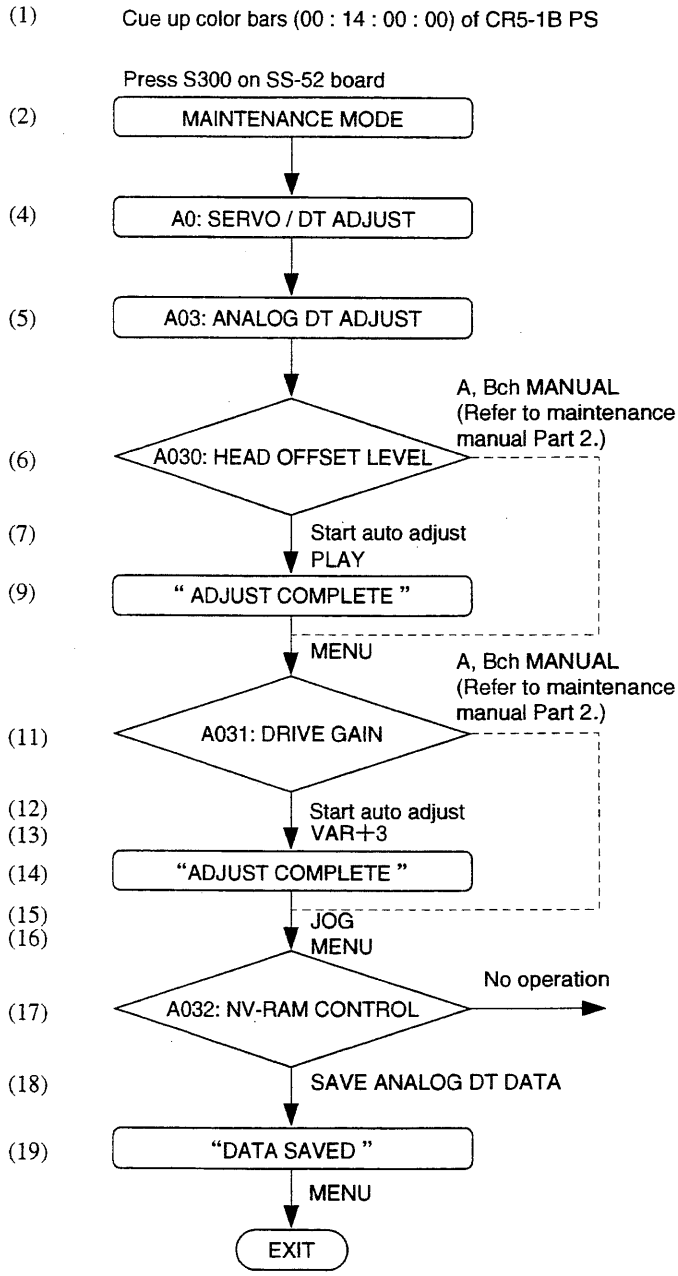

8-5-4. SAT Check (For DVW-A500P/500P)

(1) Prepare the alignment tape ZR2-1P which is cue upped the 00:25:00:00 portion by the time code.

(2) Press S300 switch on the SS-52 board to enter the maintenance mode.

(3) Move the * mark to "C0 : SERVO/DT CHECK" by the search dial.

(4) Press the SET button to enter "C0 : SERVO/DT CHECK" mode.

From this time on, operate the menu in the same way.

(5) Enter "C04 : SAT CHECK" menu.

(6) Enter "C040 : FUNCTION MODE".

(7) Insert the alignment tape ZR2-1P as instructed by monitor display and execute "FUNCTION MODE".

(8) After check is completed, "COMPLETE" is displayed.

(9) Press the MENU button several times to return to the operation mode.

Note

When adjustment is incomplete at "C04 : SAT CHECK", error message is displayed. As for error message, refer to section 5-2-5. Servo System Check 5.

(1) Cue up 00 : 25 : 00 : 00 portion of ZR2-1P.

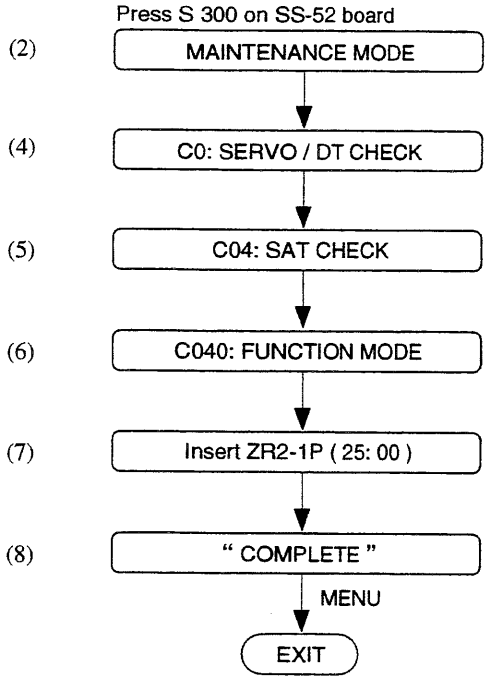

8-5-5. Head Height Check
SV1 ROM Version 1.20 and higher

(1) Prepare the alignment tape ZR2-1P which is cued up at 00:25:00:00 portion by the time code.

(2) Press S300 switch on the SS-52 board to enter the maintenance mode.

(3) Move the *mark to "C0:SERVO/DT CHECK" by the search dial.

(4) Press the SET button to enter "C0:SERVO/DT CHECK".

From this time on, operate the menu in the same way.

(5) Enter "C04:SAT CHECK".

(6) Enter "C042:HEAD HEIGHT MODE".

(7) Insert the alignment tape ZR2-1P as instructed by monitor display and execute "HEAD HEIGHT MODE".

(8) When "REW TO TC 00:25:00:00 AND REPLAY" is displayed on a monitor, rewind the alignment tape to the 00:25:00:00 portion. Press the PLAY button again.

(9) Repeat the STEP (8) from 2 to 5 times until "COMPLETE" is displayed.

(10) After "COMPLETE" is displayed and check is completed, the alignment tape is ejected automatically.

(11) Press the MENU button several times to return the operation mode.

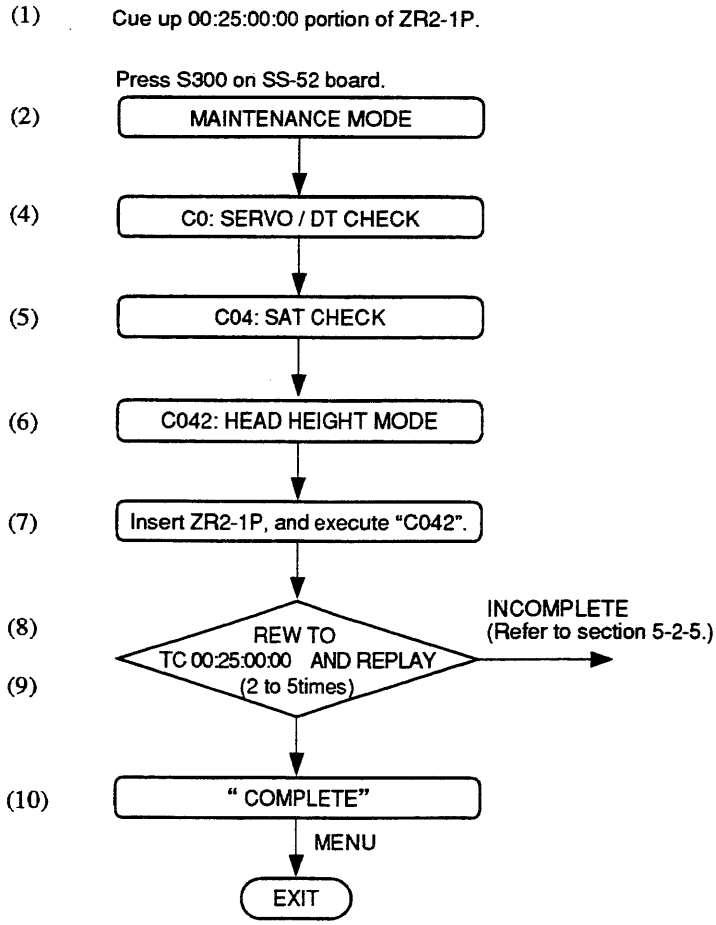

Note
When check is incomplete at "C042:HEAD HEIGHT MODE" is displayed. As for error message, refer to section 5-2-5. Servo System Check 5.

8-5-6. ADV Envelope Level Adjustment (for Board Suffix No. -15 and later)

Preparations for adjustment	Specifications	Adjustments
• Enter “A19:ADV LEVEL” menu in the “A1:RF ADJUST” mode in the maintenance mode. **Step 1** • Connect CH1 and CH2 of the oscilloscope to TP423 and TP103 on the EQ-45 board. • Play back the alignment tape ZR5-1P.	Oscilloscope TP423/EQ-45(*F-1) 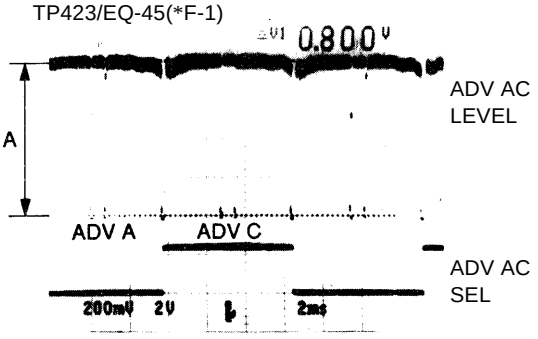 A = 800 ±100 mV	A19:ADV LEVEL Ach LEVEL ↓ Level Adjustment ↓ Cch LEVEL ↓ Level Adjustment TRIG:TP103/EQ-45(C-1)
Step 2 • Connect CH1 and CH2 of the oscilloscope to TP523 and TP103 on the EQ-45 board. • Play back the alignment tape ZR5-1P.	Oscilloscope TP523/EQ-45(*E-1) 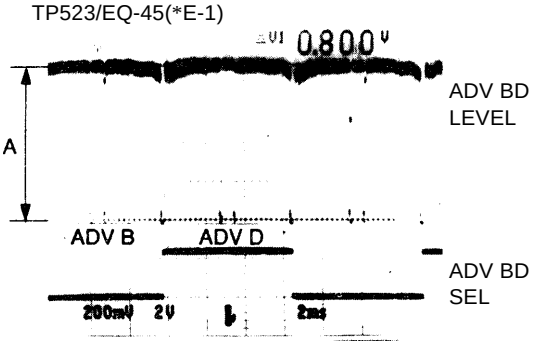 A = 800 ±100 mV	Bch LEVEL ↓ Level Adjustment ↓ Dch LEVEL ↓ Level Adjustment TRIG:TP103/EQ-45(C-1)
Step 3 • Enter “A1F:NV-RAM CONTROL” menu. • Save adjustment data.		A1F:NV-RAM CONTROL SAVE ALL ADJUST DATA

Board suffix No. 15 and later

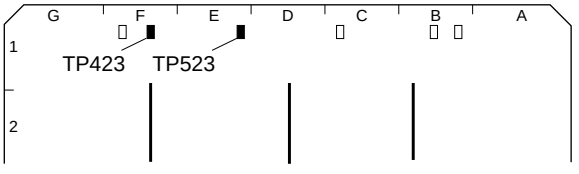

* : B SIDE

Board suffix No. 15 and later

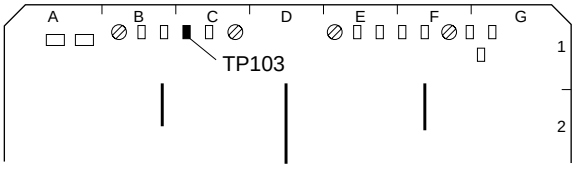

A SIDE

8-5-7. CNF Envelope Level Adjustment (for Board Suffix No. -15 and later)

Preparations for adjustment	Specifications	Adjustments
Step 1 • Enter “A1A:CNF LEVEL” menu. • Connect CH1 and CH2 of the oscilloscope to TP623 and TP105 on the EQ-45 board. • Play back the alignment tape ZR5-1P.	Oscilloscope TP623/EQ-45(*C-1) 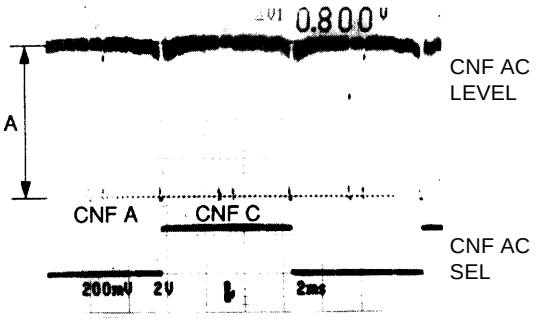 A = 800 ±100 mV	A1A:CNF LEVEL Ach LEVEL ↓ Level Adjustment ↓ Cch LEVEL ↓ Level Adjustment TRIG:TP105/EQ-45(B-1)
Step 2 • Connect CH1 and CH2 of the oscilloscope to TP723 and TP105 of the EQ-45 board. • Play back the alignment tape ZR5-1P.	Oscilloscope TP723/EQ-45(*B-1) 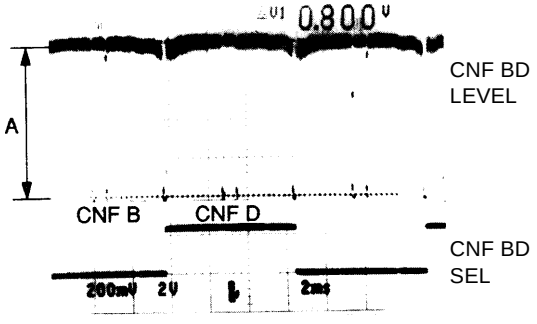 A = 800 ±100 mV	Bch LEVEL ↓ Level Adjustment ↓ Dch LEVEL ↓ Level Adjustment ↓ MENU TRIG:TP105/EQ-45(B-1)
Step 3 • Enter “A1F:NV-RAM CONTROL” menu. • Save adjustment data. • Exit the maintenance mode.		A1F:NV-RAM CONTROL SAVE ALL ADJUST DATA SET ↓ MENU | MENU

Board suffix No. 15 and later

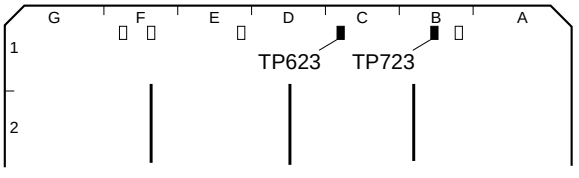

* : B SIDE

Board suffix No. 15 and later

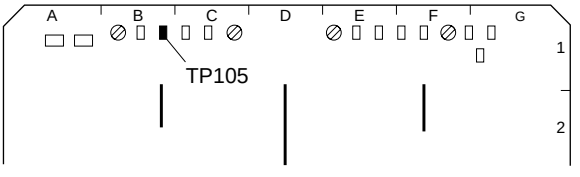

A SIDE

8-5-6. ADV Envelope Level Adjustment (for Board Suffix No. -11, 12, 13, 22, 23, 31, 41)

Preparations for adjustment	Specifications	Adjustments
• Enter "A19:ADV LEVEL" menu in the "A1:RF ADJUST" mode in the maintenance mode. **Step 1** • Connect CH1 and CH2 of the oscilloscope to TP423 and TP103 on the EQ-45 board. • Play back the alignment tape ZR5-1P.	Oscilloscope TP423/EQ-45(*F-1)(F-3) 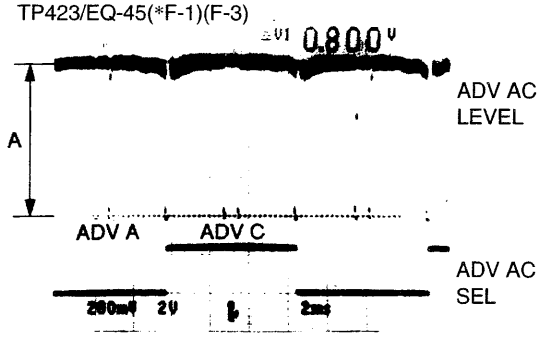 A = 800 ±100 mV	A19:ADV LEVEL Ach LEVEL ↓ Level Adjustment ↓ Cch LEVEL ↓ Level Adjustment TRIG:TP103/EQ-45(C-1)
Step 2 • Connect CH1 and CH2 of the oscilloscope to TP523 and TP104 on the EQ-45 board. • Play back the alignment tape ZR5-1P.	Oscilloscope TP523/EQ-45(*D-1)(D-3) 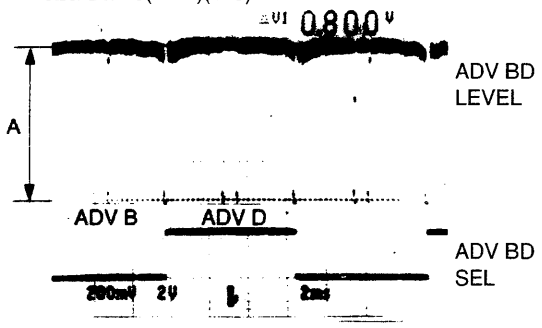 A = 800 ±100 mV	Bch LEVEL ↓ Level Adjustment ↓ Dch LEVEL ↓ Level Adjustment TRIG:TP104/EQ-45(C-1)
Step 3 • Enter "A1F:NV-RAM CONTROL" menu. • Save adjustment data.		A1F:NV-RAM CONTROL SAVE ALL ADJUST DATA

Board suffix No. 13, 23, 31, 41

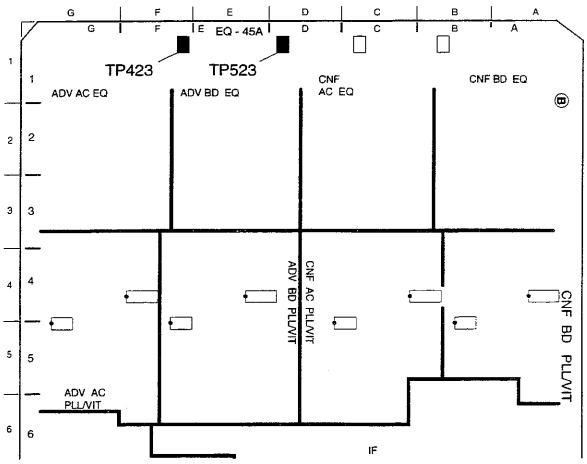

* : B SIDE

Board suffix No. 11, 12, 22

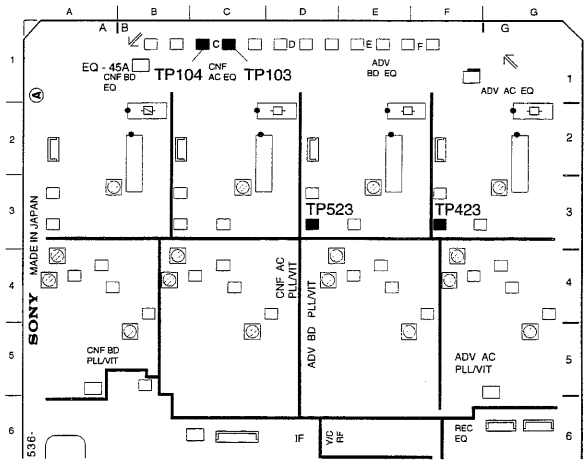

A SIDE

8-5-7. CNF Envelope Level Adjustment (for Board Suffix No. -11, 12, 13, 22, 23)

Preparations for adjustment	Specifications	Adjustments
Step 1 • Enter "A1A:CNF LEVEL" menu. • Connect CH1 and CH2 of the oscilloscope to TP623 and TP105 on the EQ-45 board. • Play back the alignment tape ZR5-1P.	Oscilloscope TP623/EQ-45(*C-1)(B-3) 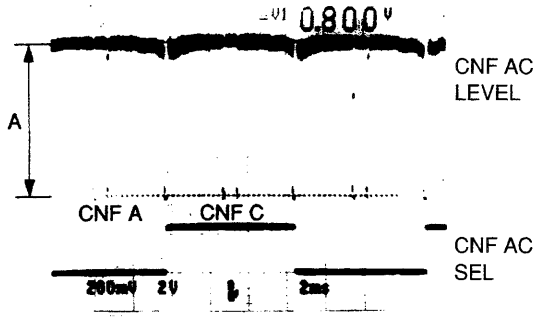 A = 800 ±100 mV	A1A:CNF LEVEL Ach LEVEL ↓ Level Adjustment ↓ Cch LEVEL ↓ Level Adjustment TRIG:TP105/EQ-45(B-1)
Step 2 • Connect CH1 and CH2 of the oscilloscope to TP723 and TP106 of the EQ-45 board. • Play back the alignment tape ZR5-1P.	Oscilloscope TP723/EQ-45(*B-1)(A-3) 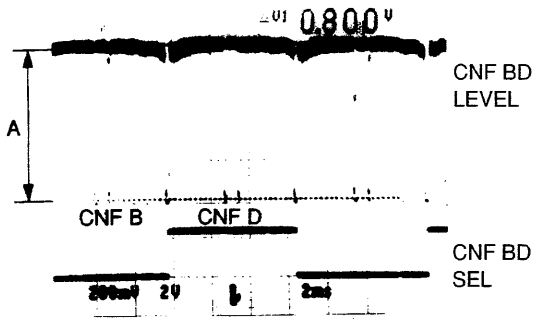 A = 800 ±100 mV	Bch LEVEL ↓ Level Adjustment ↓ Dch LEVEL ↓ Level Adjustment ↓ MENU TRIG:TP106/EQ-45(B-1)
Step 3 • Enter "A1F:NV-RAM CONTROL" menu. • Save adjustment data. • Exit the maintenance mode.		A1F:NV-RAM CONTROL SAVE ALL ADJUST DATA SET ↓ MENU ⋮ MENU

Board suffix No. 13, 23

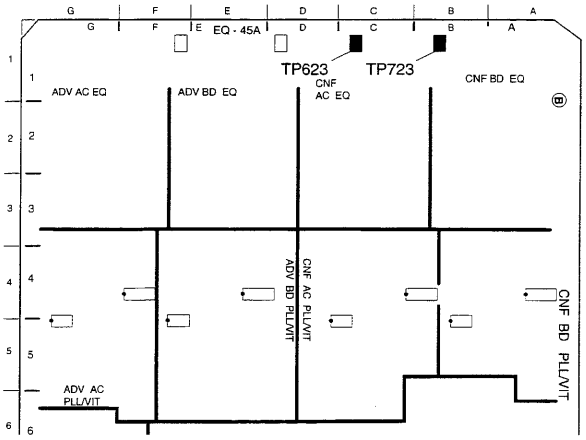

* : B SIDE

Board suffix No. 11, 12, 22

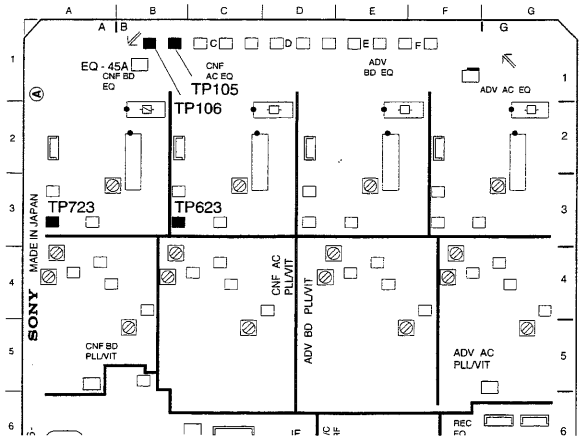

A SIDE

8-5-8. Playback Equalizer Adjustment

(1) Insert the alignment tape ZR5-1P.

(2) Press S300 switch on the SS-52 board to enter the maintenance mode.

(3) Move the * mark to "A1 : RF ADJUST" by the search dial.

(4) Press the SET button to enter "A1 : RF ADJUST" mode.

From this time on, operate the menu in the same way.

(5) Enter "A12 : ADV EQUALIZER" menu.

(6) Select "Auto" by turning the search dial while pressing the JOG button.

(7) Press the SET button to execute the automatic adjustment.

(8) After adjustment is completed, "Adjust Complete" is displayed.

(9) Press the MENU button to return to RF ADJUST MODE display.

(10) Enter "A13 : CNF EQUALIZER" menu.

(11) Select "Auto" by turning the search dial while pressing the JOG button.

(12) Press the SET button to execute automatic adjustment.

(13) After adjustment is completed, "Adjust Complete" is displayed.

(14) Press the MENU button to return to RF ADJUST MODE display.

(15) Enter "A1F : NV-RAM CONTROL".

(16) Select "SAVE ALL ADJUST DATA".

(17) After adjustment data are saved in NV-RAM completely, "Save Complete" is displayed.

(18) Press the MENU button several times to return to the operation mode.

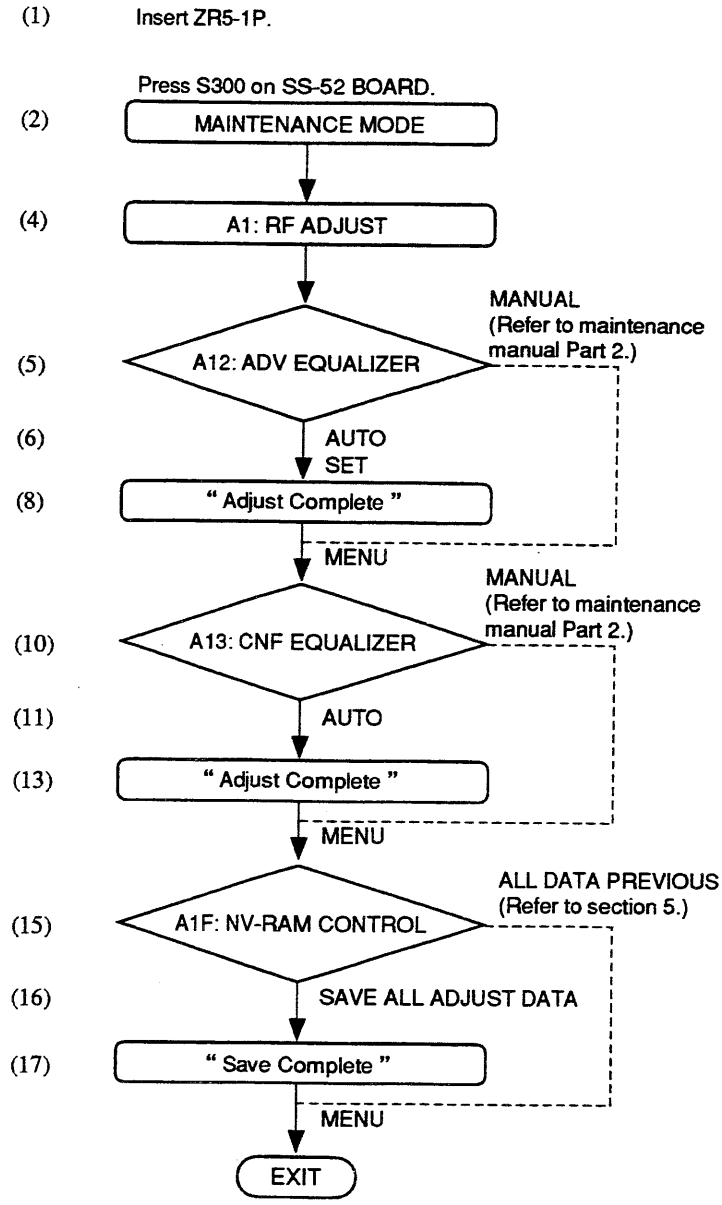

8-5-9. Recording Current Adjustment

Input: Color bars of the TEST signal or external SG

(1) Insert a digital tape for recording.

(2) Press S300 switch on the SS-52 board to enter the maintenance mode.

(3) Move the * mark to "A1 : RF ADJUST" by the search dial.

(4) Press the SET button to enter "A1 : RF ADJUST" mode.

From this time on, operate the menu in the same way.

(5) Enter "A18 : REC CURRENT" menu.

(6) Select "Auto" by turning the search dial while pressing the JOG button.

(7) Press the SET button to execute the automatic adjustment.

(8) After adjustment is completed, "Adjust Complete" is displayed.

(9) Press the MENU button to return to RF ADJUST MODE display.

(10) Enter "A1F : NV-RAM CONTROL" menu.

(11) Select "SAVE ALL ADJUST DATA".

(12) After adjustment data are saved in NV-RAM completely, "Save Complete" is displayed.

(13) Press the MENU button several times to return to the oparation mode.

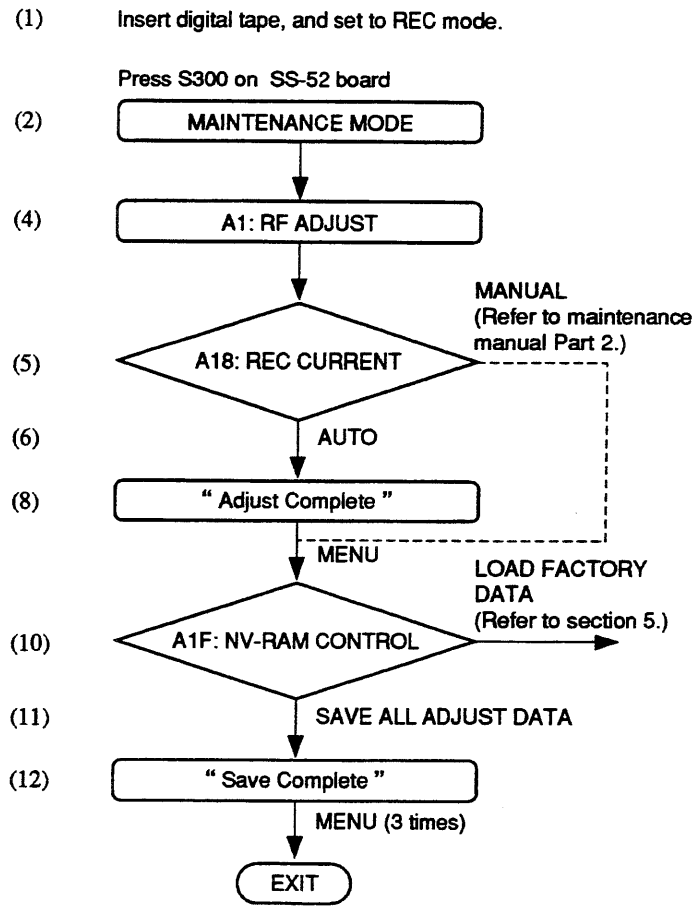

8-6. ADJUSTMENT AFTER DRUM REPLACEMENT (For DVW-A500P/A510P/CA510P)

[Item List]

No.	ITEMS	BOARDS	ADJUSTMENTS	NOTES
1	EQ RF (METAL Y)	DM-89	A30: RF GAIN M-Y-A,B	TP100
	(OXIDE Y)	DM-89	A30: RF GAIN O-Y-A,B	TP100
	(METAL C)	DM-89	A30: RF GAIN M-C-A,B	TP300
	(OXIDE C)	DM-89	A30: RF GAIN O-C-A,B	TP300
	DATA SAVE		A3F: NV-RAM CONTROL	
2	DM OMC LIM BAL (METAL Y)	DM-89	RV105, RV106	TP105
	(OXIDE Y)	DM-89	RV107, RV108	TP105
	(METAL C)	DM-89	RV305, RV306	TP305
	(OXIDE C)	DM-89	RV307, RV308	TP305
3	DEMOD LIM BAL (Y)	DM-89	RV502	TP501
	(C)	DM-89	RV702	TP8
4	PB F RESP (METAL Y)	DM-89	A32: EQ1 METAL-Y-A, B	COMPONENT Y
	(OXIDE Y)	DM-89	A32: EQ1 OXIDE-Y-A, B	COMPONENT Y
	(METAL C)	DM-89	A32: EQ1 METAL-C-A, B	COMPONENT R/B
	(OXIDE C)	DM-89	A32: EQ1 OXIDE-C-A, B	COMPONENT R/B
	DATA SAVE		A3F: NV-RAM CONTROL	
5	DM RF (METAL Y)	DM-89	A31: RF LEVEL M-Y-A, B	TP3
	(OXIDE Y)	DM-89	A31: RF LEVEL O-Y-A, B	TP3
	(METAL C)	DM-89	A31: RF LEVEL M-C-A, B	TP7
	(OXIDE C)	DM-89	A31: RF LEVEL O-C-A, B	TP7
	DATA SAVE		A3F: NV-RAM CONTROL	
6	DM RF ENVELOPE CHECK	DM-89	RV205	TP203
		DM-89	RV405	TP403
7	TBC Y/C DELAY (METAL)	TBC-24	RV500	COMPONENT
	(OXIDE)	TBC-24	RV501	COMPONENT
8	Y and C ERROR OFFSET	TBC-24	RV401	COMPOSITE
		TBC-24	RV601	COMPOSITE
9	AFM RF LEVEL	AP-28	RV301	TP401, TP451

[Equipment]

- Oscilloscope (TEKTRONIX 2465B or equivalent)
- Signal Generator
  Analog Composite SG (TEKTRONIX TSG-271 or equivalent)
- Spectrum Analyzer
- PAL Waveform/Vector Monitor (TEKTRONIX 1751 or equivalent)
- Component Waveform Monitor (TEKTRONIX WFM300A or equivalent)

- Alignment Tape CR5-2A PS (part No. 8-960-098-44)

Contents

TIME min. : sec.	VIDEO TRACK
0 : 00	75% Color Bars
3 : 00	60% Multi Barst Y: 0.5, 1.0, 2.0, 3.0, 4.1, 4.5 MHz C: 0.2, 0.5, 1.0, 1.5, 2.0 MHz
6 : 00	50% Bowtie & 10T
9 : 00	Pulse & Bar
11 : 00	Quad Phase
13 : 00	C-Monoscope Switching position is shifted.
15 : 00	

- Alignment Tape CR5-1B PS (part No. 8-960-096-91)

Contents

TIME min.: sec.	VIDEO TRACK	AFM	CTL
0 : 00	RF Sweep	No Signal	CTL
2 : 00	60% H Sweep (CTDM)		
5 : 00	Pulse & Bar (CTDM)		
8 : 00	60% Multi Burst		
11 : 00	Pulse & Bar		
14 : 00	100% Color Bars	400 Hz SINE WAVE 25 kHz DEVIATION	
16 : 30		75 kHz DEVIATION	
17 : 00	50% Bowtie & 10T	No Signal	
19 : 00	Line 17 Signal		
22 : 00	Quad Phase		
24 : 00	Flat Field		
26 : 00	100% Color Bars with Dropout		
28 : 00	Composite H Sweep with VISC		
30 : 00			

[Switch Setting]

Upper/Lower Control Panel

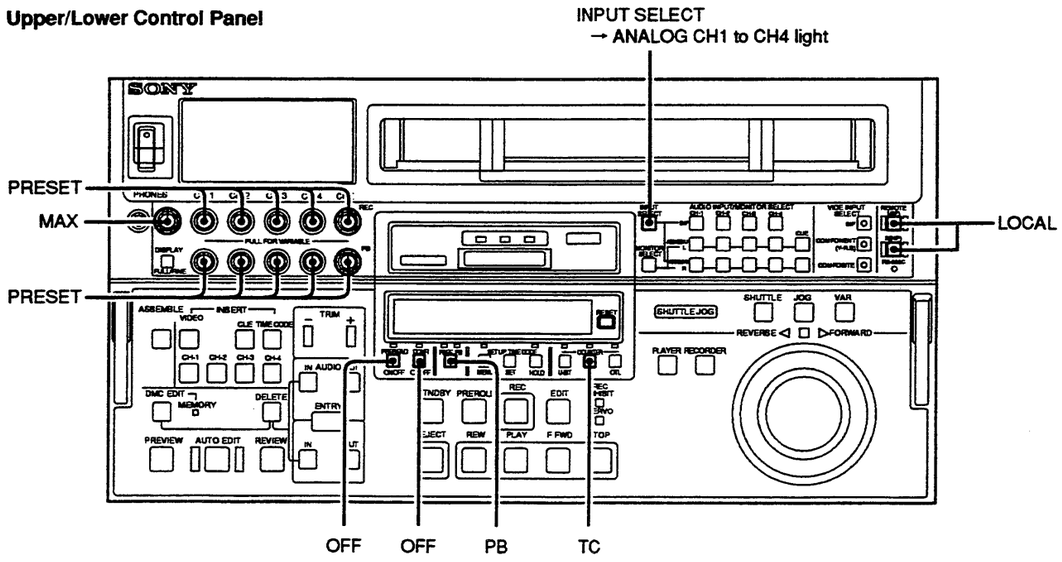

Sub Control Panel

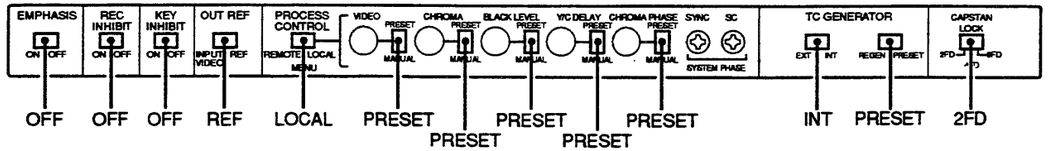

System Set-up Panel

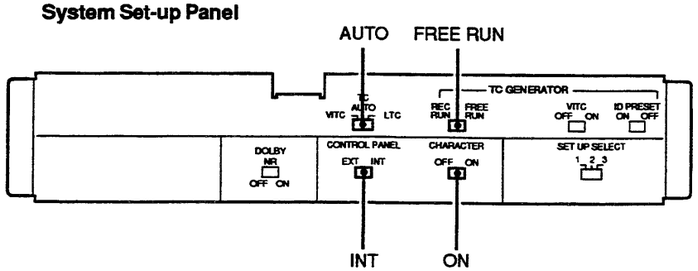

8-6. ADJUSTMENT AFTER DRUM REPLACEMENT (For DVW-A500P/A510P/CA510P)

[Switch Setting]

Upper/Lower Control Panel

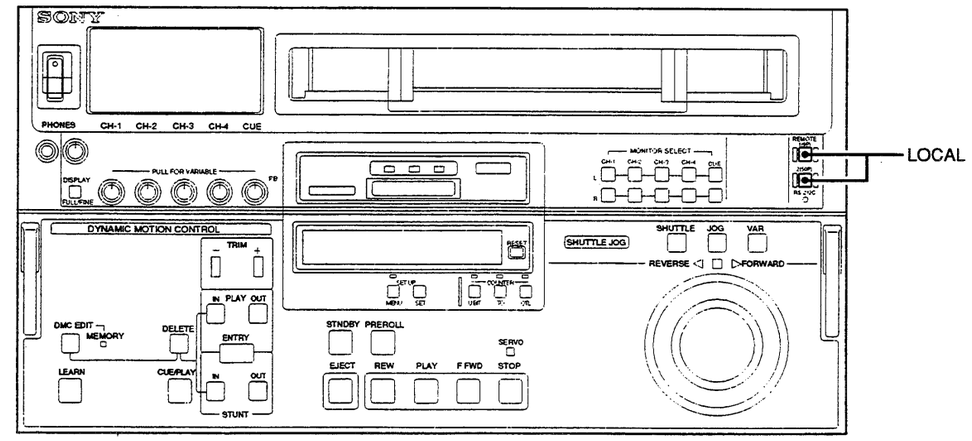

Sub Control Panel

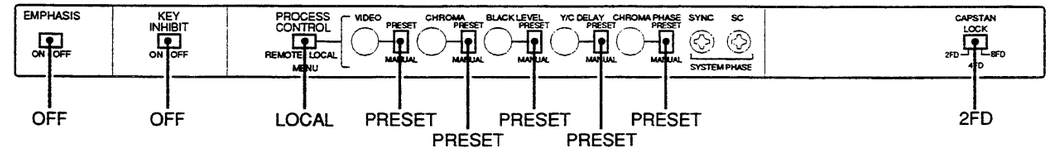

System Set-up Panel

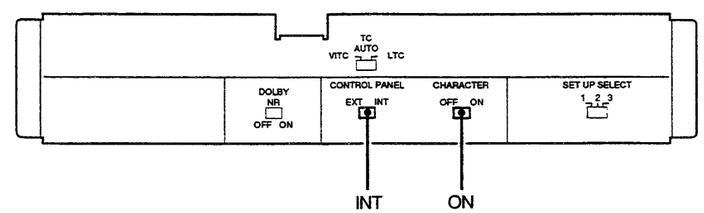

How to operate the maintenance mode

Push ⑧ S300(DIAG/ADJUST 1) (M-1) on the SS-52 board to enter the maintenance mode.

How to enter the next menu:

Press the ⑥ JOG button once. (Enters JOG mode.)
Turn the ⑦ search dial to move the ∗ mark to a desired item.
Press the ③ SET button.

How to exit the current menu or the maintenance mode:

Press the ② MENU button.

How to operate a tape (e.g. PLAY) in the manual adjustment or other items:

Press the ③ SET button to exit the maintenance mode temporarily. (A tape can be operated in this condition.)
Press the ② MENU button to return to the maintenance mode.

How to change the data (adjust the level) manually:

Turn the ⑦ search dial to move the ∗ mark to the item wishing to be adjusted.
Turn the ⑦ search dial while pressing the ⑥ JOG button.

How to save the data:

Turn the ⑦ search dial to move the ∗ mark to "A?F: NV-RAM CONTROL".
Press the ③ SET button.
Turn the ⑦ search dial to move the ∗ mark to "SAVE ALL ADJUST DATA".
Press the ③ SET button.

	Preparations for adjustment	Specifications	Adjustments	
⑧ ⑦③ ⑦③ ③ PLAY ②	• Enter "A30: EQ VR" menu in the "A3:BETACAM PB ADJUST" in the maintenance mode. **Step 1** • Connect CH-1 and CH-2 of the oscilloscope to TP101 and TP4 on the DM-89 board. • Play back the flat field signal portion (24:00-26:00) of the alignment tape CR5-1B PS.	Oscilloscope TP101/DM-89(F-7) 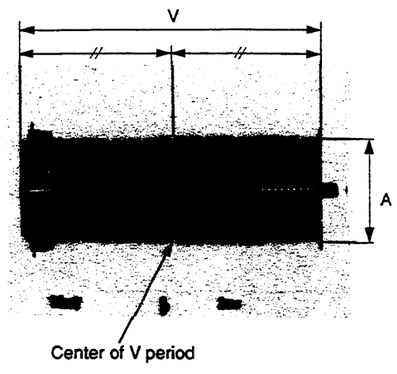 A = 150 ±10 mV p-p	A30: EQ VR RF GAIN METAL-Y-A ↓ Level Adjustment ↓ RF GAIN METAL-Y-B ↓ Level Adjustment TRIG:TP4/DM-89(E-1)	 ⑦ ⑥⑦ ⑦ ⑥⑦ •
	•		MENU	
⑦	**Step 5** • Enter "A3F:NV-RAM CONTROL" menu. • Save adjustment data. • Exit the maintenance mode.		A3F: NV-RAM CONTROL SAVE ALL ADJUST DATA SET ↓ MENU : MENU Press several times.	 ⑦ ③ ② • ②

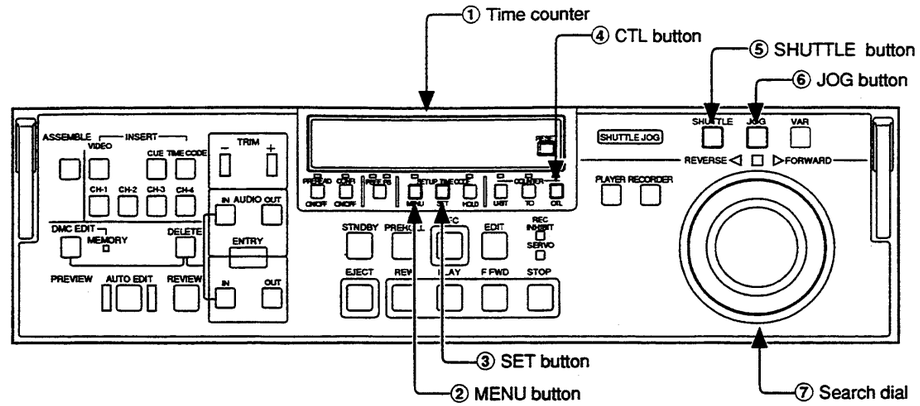

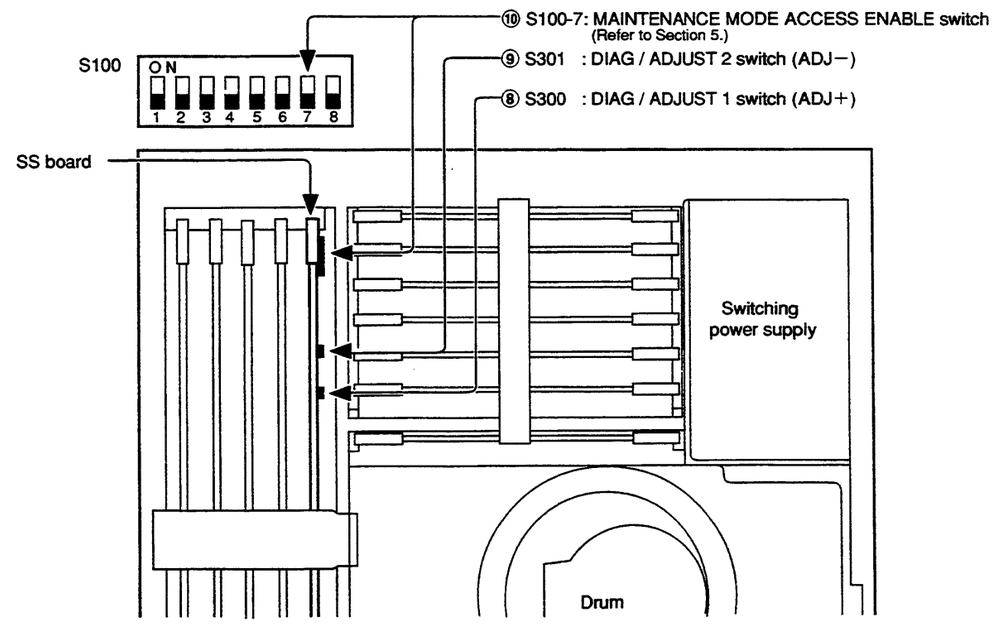

DM-89 board (A side)

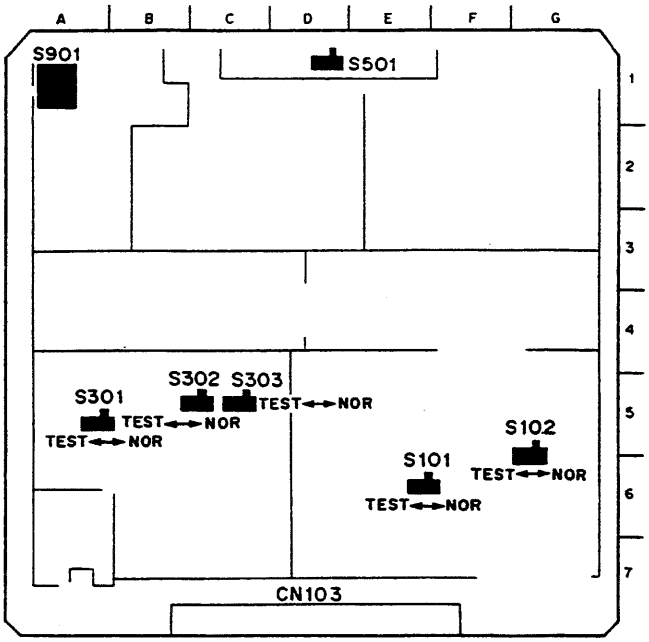

When adjustment is performed, return the settings of the switch to factory settings as shown below.

SWITCH No.		Name	FACTORY SETTING
S101		Y-RF LPF & EQ TEST (Y-RF low-pass filter & equalizer test)	NORMAL POSITION
S102		Y-DO DET TEST (Y-dropout detector test)	NORMAL POSITION
S301		C-RF LPF & EQ TEST (C-RF low-pass filter & equalizer test)	NORMAL POSITION
S302		C-DO DET METAL TEST (C-dropout detector metal tape test)	NORMAL POSITION
*S303 Not on the board Suffix No.13 and higher		C-DO DET OXIDE TEST (C-dropout detector oxide tape test)	NORMAL POSITION
S501		NON LINEAR ON/ OFF (Non-linear equalization on/off selection)	ON (DEFAULT POSITION)
S901	1	RF ADJUSTING SWITCH	OFF (OPEN)
	2	FACTORY USE	OFF (OPEN)
	3	FACTORY USE	OFF (OPEN)
	4	FACTORY USE	OFF (OPEN)

TBC-23 board (A side)

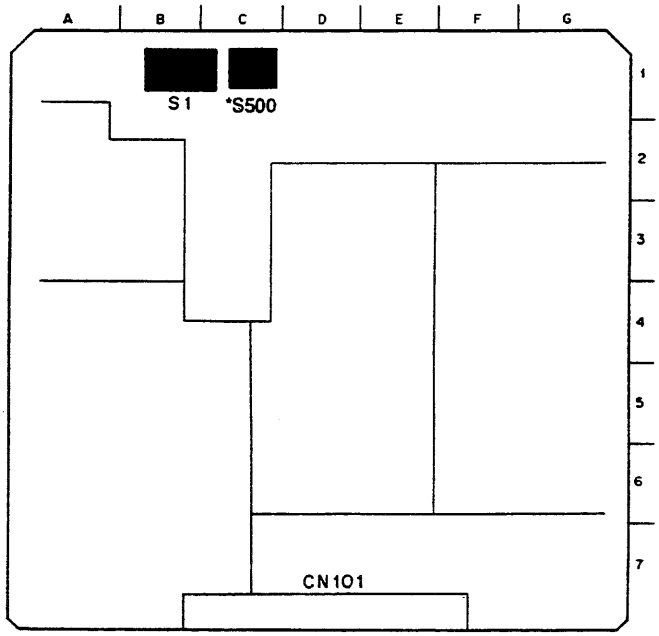

When adjustment is performed, return the settings of the switch to factory settings as shown below.

SWITCH No.		Name	FACTORY SETTING
S1	1	Y MUTE	OFF (OPEN)
	2	C MUTE	OFF (OPEN)
	3	———	OFF (OPEN)
	4		
	5	COMB	OFF (OPEN)
	6	TBC TEST	OFF (OPEN)
	7	———	OFF (OPEN)
	8	VIDEO PHASE	OFF (OPEN)
*S500 On the board Suffix No.13 and higher	1	———	OFF (OPEN)
	2	———	OFF (OPEN)
	3	———	OFF (OPEN)
	4	———	OFF (OPEN)

[Connection]

Connect some equipments as follows unless otherwise specified.

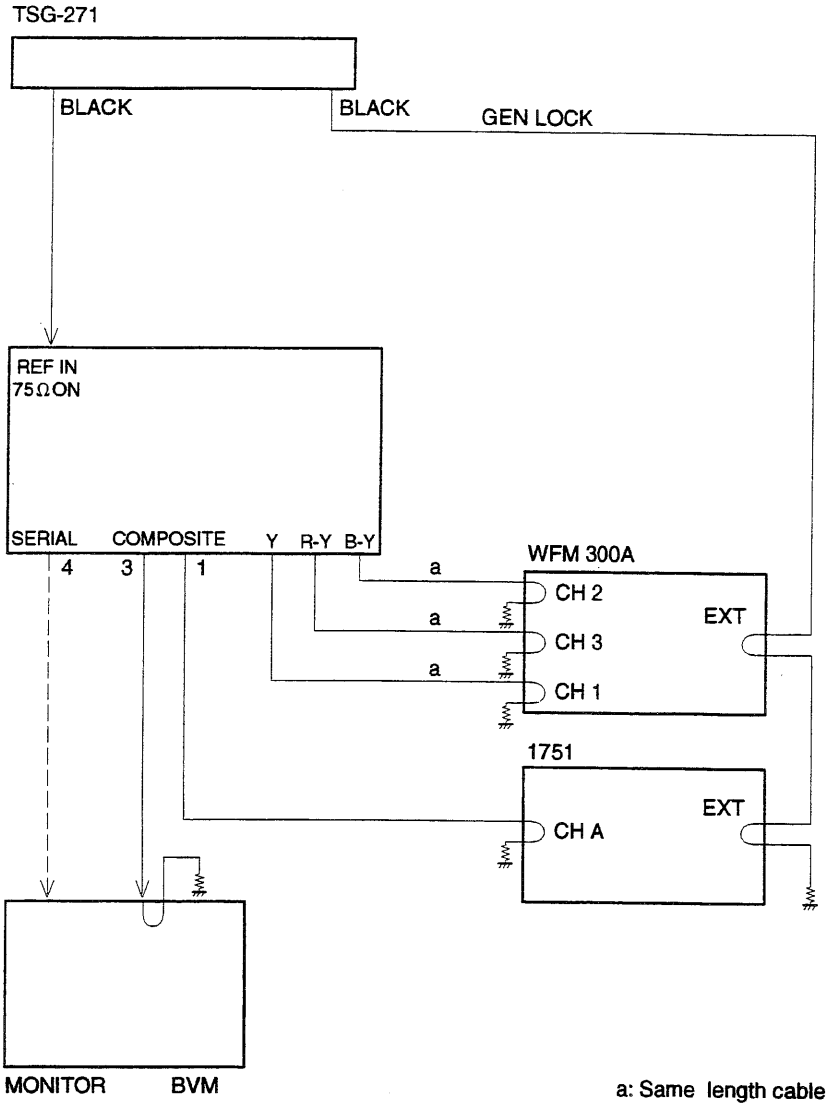

8-6-1. EQ RF Output Level Adjustment

Preparations for adjustment	Specifications	Adjustments
• Enter "A30: EQ VR" menu in the "A3:BETACAM PB ADJUST" in the maintenance mode. **Step 1** • Connect CH-1 and CH-2 of the oscilloscope to TP4 and TP100 (*TP101) on the DM-89 board. • Play back the flat field signal portion (24:00-26:00) of the alignment tape CR5-1B PS.	Oscilloscope TP100 (*TP101)/DM-89(F-7) 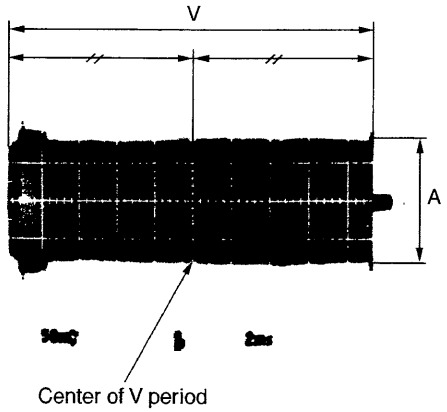 A = 380 ±20 mV p-p (*A = 150 ±10 mV p-p)	A30: EQ VR RF GAIN METAL-Y-A ↓ Level Adjustment ↓ RF GAIN METAL-Y-B ↓ Level Adjustment TRIG:TP4/DM-89(E-1)

Continues to next page.

Note

*; For suffix No. 11/12 of the DM-89 Board

Board suffix No. 13 and later

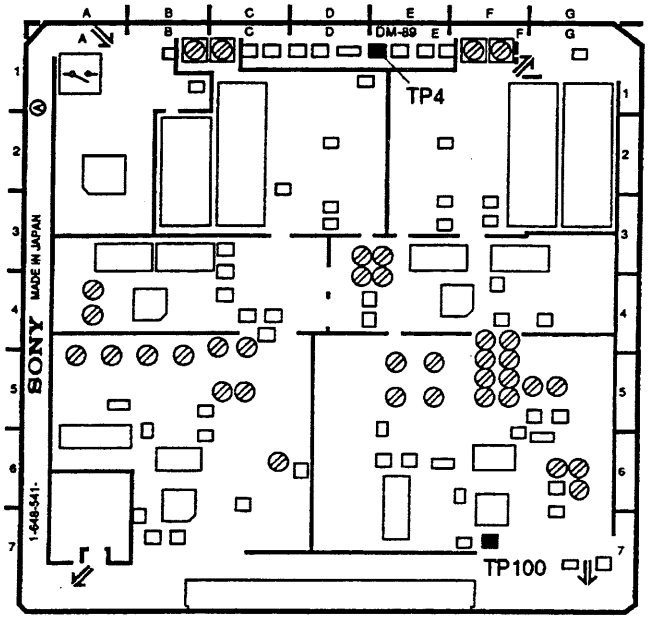

Board suffix No. 11, 12

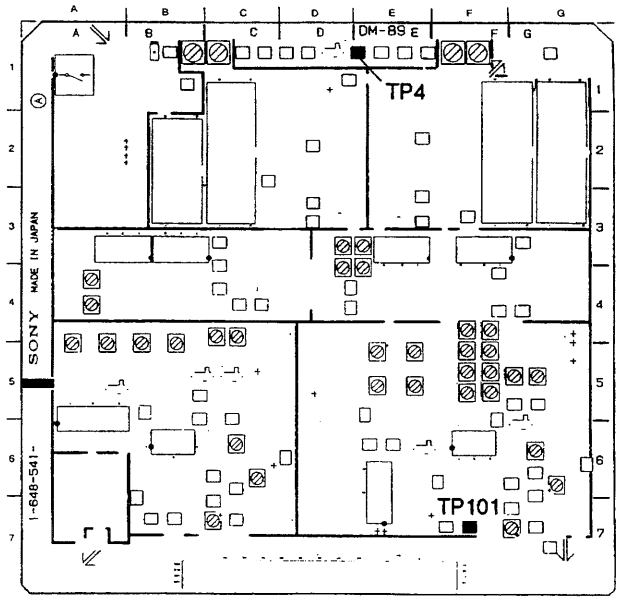

Preparations for adjustment	Specifications	Adjustments
Step 2 • Connect CH-1 and CH-2 of the oscilloscope to TP4 and TP100 (*TP101) on the DM-89 board. • Play back the color bars signal portion (0:00-3:00) of the alignment tape CR5-2A PS.	Oscilloscope TP100 (*TP101)/DM-89(F-7) 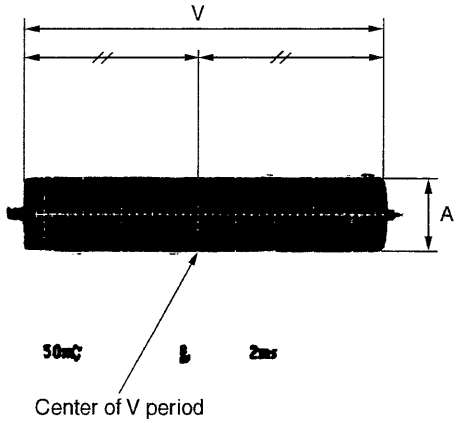 A = 250 ± 20 mV p-p (*A = 100 ± 10 mV p-p)	RF GAIN OXIDE-Y-A ↓ Level Adjustment ↓ RF GAIN OXIDE-Y-B ↓ Level Adjustment TRIG:TP4/DM-89(E-1)

Note

*; For suffix No. 11/12 of the DM-89 Board

Board suffix No. 13 and later

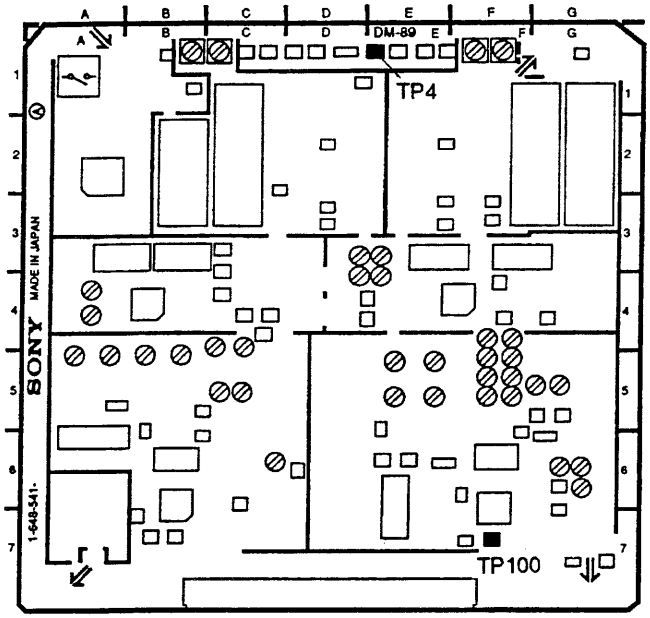

Board suffix No. 11, 12

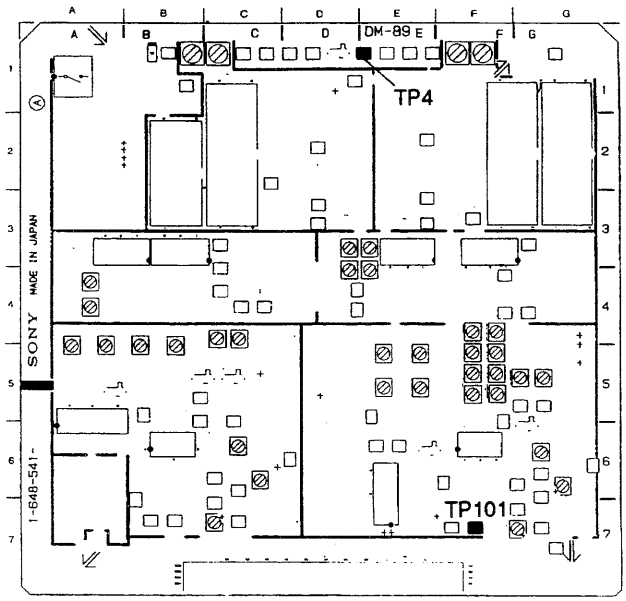

Preparations for adjustment	Specifications	Adjustments
Step 3 • Connect CH-1 and CH-2 of the oscilloscope to TP4 and TP300 (*TP301) on the DM-89 board. • Play back the flat field signal portion (24:00-26:00) of the alignment tape CR5-1B PS.	Oscilloscope TP300 (*TP301)/DM-89(B-7) 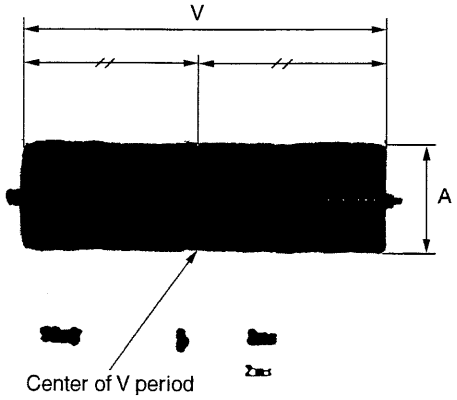 A = 380 ± 20 mV p-p (*A = 150 ± 10 mV p-p)	RF GAIN METAL-C-A ↓ Level Adjustment ↓ RF GAIN METAL-C-B ↓ Level Adjustment TRIG:TP4/DM-89(E-1)

Continues to next page.

Note

*; For suffix No. 11/12 of the DM-89 Board

Board suffix No. 13 and later

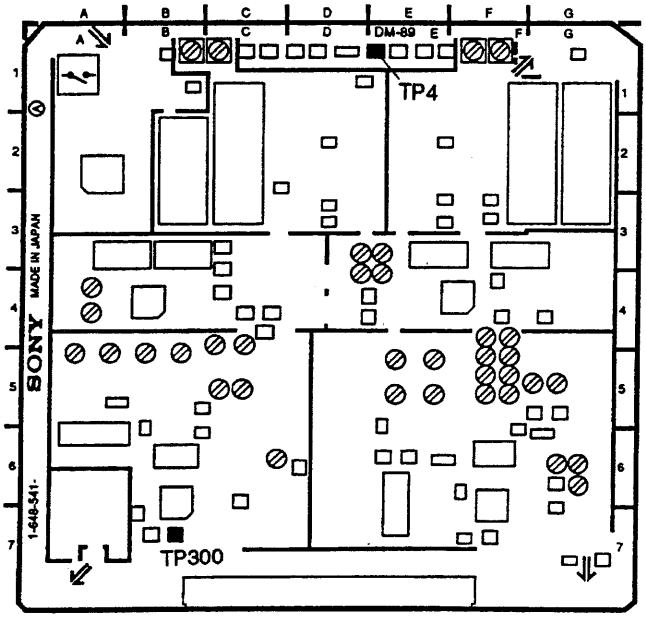

Board suffix No. 11, 12

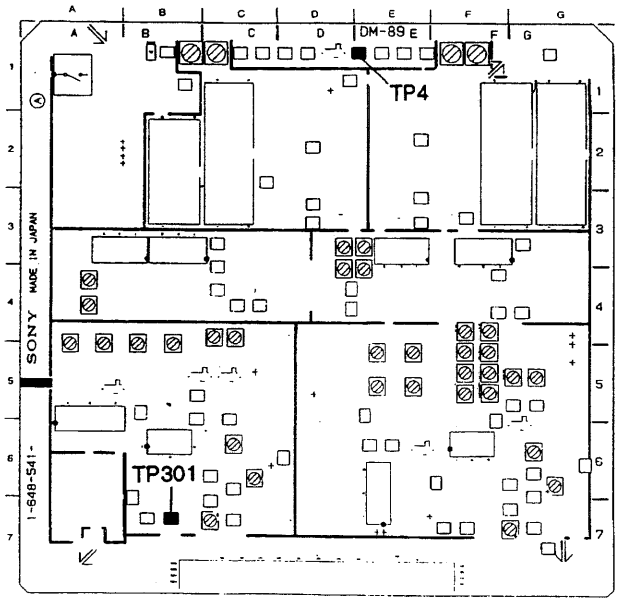

Preparations for adjustment	Specifications	Adjustments
Step 4 • Connect CH-1 and CH-2 of the oscilloscope to TP4 and TP300 (*TP301) on the DM-89 board. • Play back the color bars signal portion (0:00-3:00) of the alignment tape CR5-2A PS.	Oscilloscope TP300 (*TP301)/DM-89(B-7) 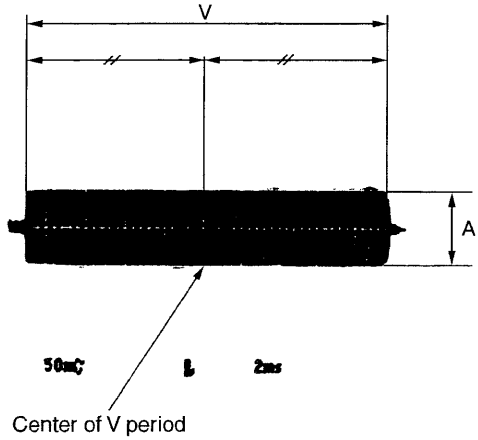 A = 250 ± 20 mV p-p (*A = 100 ± 10 mV p-p)	RF GAIN OXIDE-C-A ↓ Level Adjustment ↓ RF GAIN OXIDE-C-B ↓ Level Adjustment ↓ MENU TRIG:TP4/DM-89(E-1)
Step 5 • Enter "A3F:NV-RAM CONTROL" menu. • Save adjustment data. • Exit the maintenance mode.		A3F: NV-RAM CONTROL SAVE ALL ADJUST DATA SET ↓ MENU ⋮ MENU Press several times.

Note

*; For suffix No. 11/12 of the DM-89 Board

Board suffix No. 13 and later

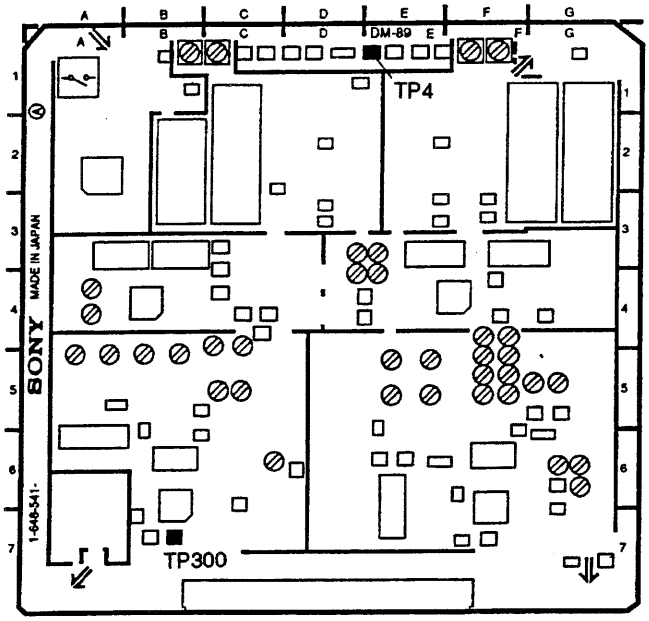

Board suffix No. 11, 12

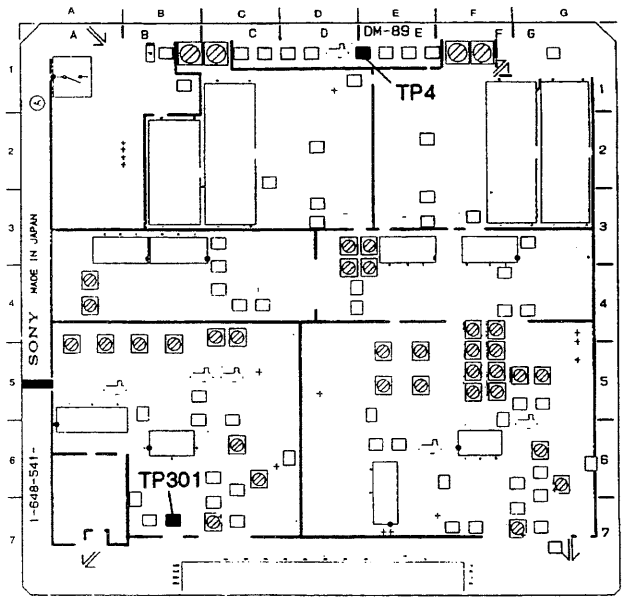

8-6-2 (1). DM OMC Limiter Balance Adjustment

[**Connection**]

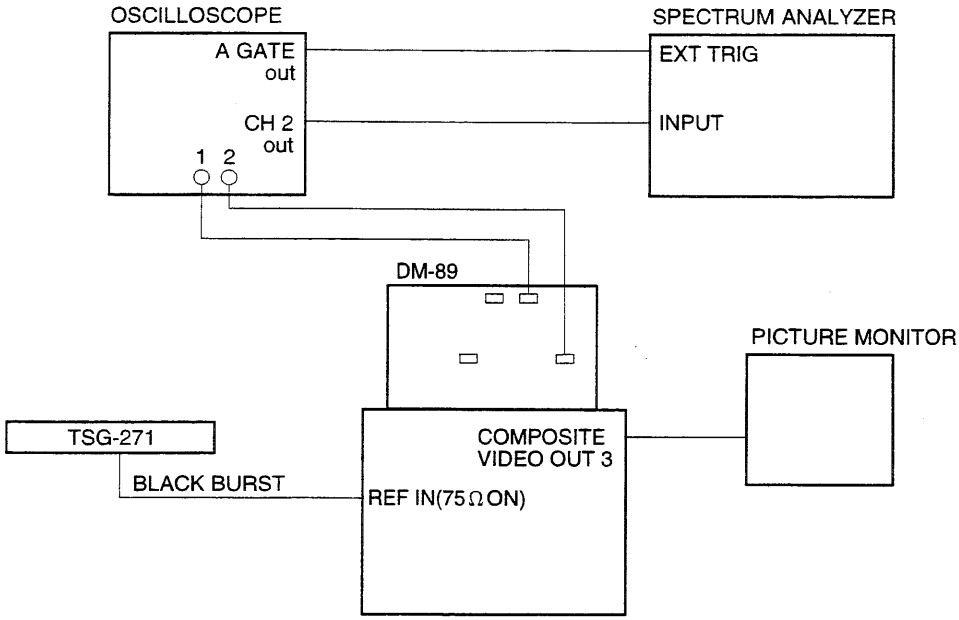

Note

In case spectrum analyzer is not available, refer to 8-6-2 (2).

Preparations for adjustment	Specifications	Adjustments
Connect the spectrum analyzer to OUT terminal of the oscilloscope. • Spectrum analyzer setting CENTER FREQ: 10 MHz SPAN: 20 MHz RBW: 100 kHz VBW: 10 kHz SWP TIME: 100 ms **Step 1** • Connect CH-1 and CH-2 of the oscilloscope to TP4 and TP105 on the DM-89 board. • Play back the flat field signal portion (24:00-26:00) of the alignment tape CR5-1B PS.	Spectrum analyzer TP105/DM-89(G-4) 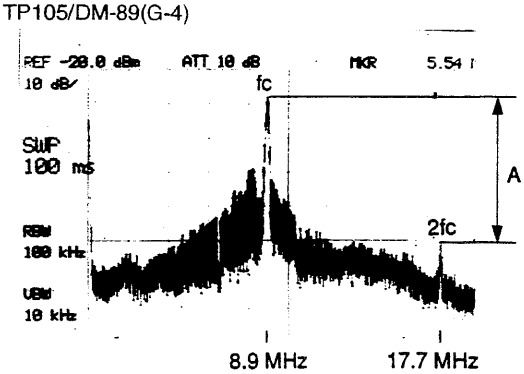 A ≧ 40 dB	(M-Y OMC LIM BALANCE) ⊘RV105/DM-89(F-4) ⊘RV106/DM-89(F-5) TRIG: TP4/DM-89(E-1)
Step 2 • Connect CH-1 and CH-2 of the oscilloscope to TP4 and TP105 on the DM-89 board. • Play back the pulse & bar signal portion (9:00-11:00) of the alignment tape CR5-2A PS.	Spectrum analyzer TP105/DM-89(C-4) 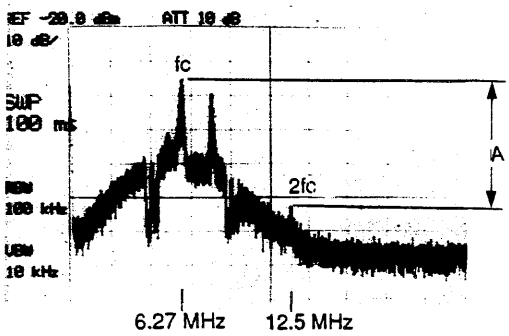 A ≧ 35 dB	(O-Y OMC LIM BALANCE) ⊘RV107/DM-89(F-5) ⊘RV108/DM-89(F-5) TRIG:TP4/DM-89(E-1)

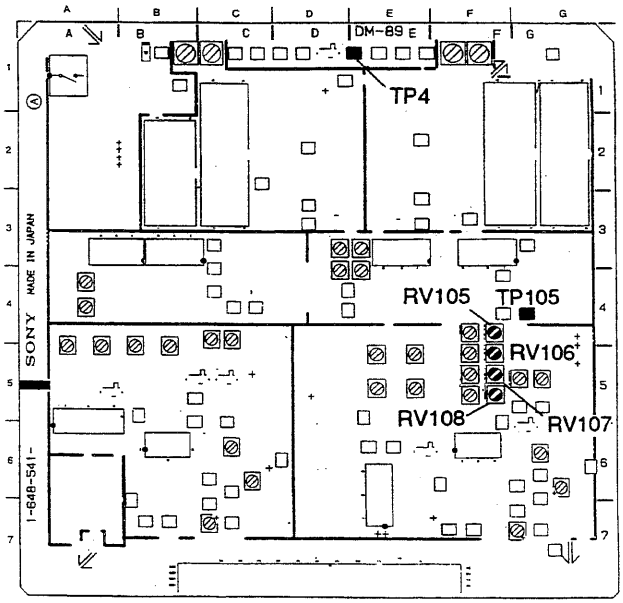

Preparations for adjustment	Specifications	Adjustments
Step 3 • Connect CH-1 and CH-2 of the oscilloscope to TP5 and TP305 on the DM-89 board. • Play back the flat field signal portion (24:00-26:00) of the alignment tape CR5-1B PS.	Spectrum analyzer TP305/DM-89(C-4) 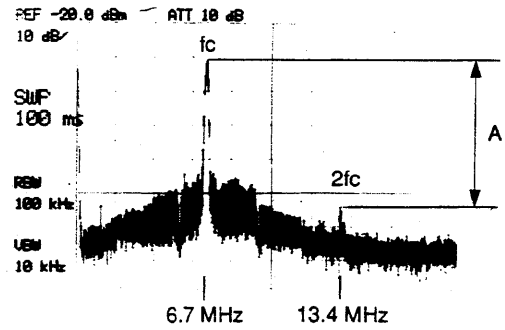 A ≧ 40 dB	(M-C OMC LIM BALANCE) ⊘RV305/DM-89(F-4) ⊘RV306/DM-89(F-5) TRIG: TP5/DM-89(D-1)
Step 4 • Connect CH-1 and CH-2 of the oscilloscope to TP5 and TP305 on the DM-89 board. • Play back the pulse & bar signal portion (9:00-11:00) of the alignment tape CR5-2A PS.	Spectrum analyzer TP305/DM-89(C-4) 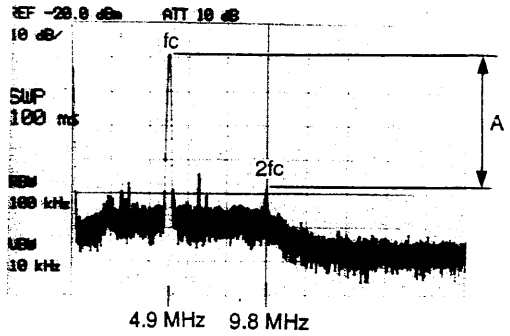 A ≧ 35 dB	(O-C OMC LIM BALANCE) ⊘RV307/DM-89(F-5) ⊘RV308/DM-89(F-5) TRIG: TP5/DM-89(D-1)

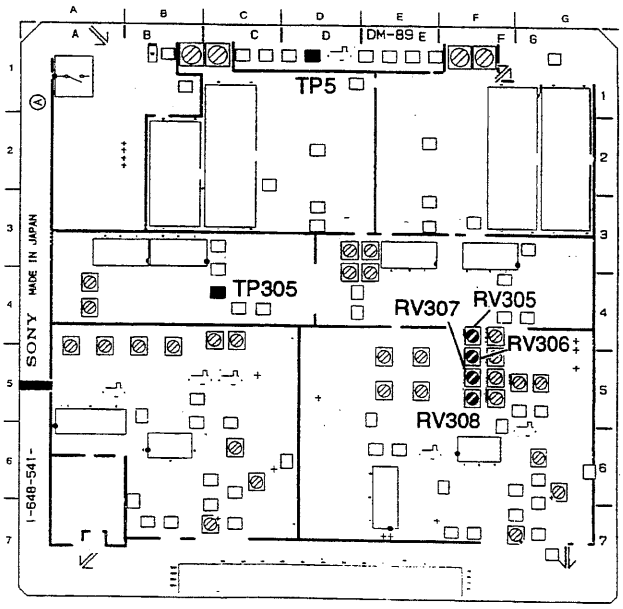

8-6-2 (2). DM OMC Limiter Balance Adjustment...When Spectrum analyzer is not used.

Preparations for adjustment	Specifications	Adjustments
• Set RVs as shown right figure.	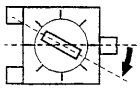	Y; ⊘RV105/DM-89(F-4) ⊘RV106/DM-89(F-5) ⊘RV107/DM-89(F-5) ⊘RV108/DM-89(F-5) C; ⊘RV305/DM-89(F-4) ⊘RV306/DM-89(F-5) ⊘RV307/DM-89(F-5) ⊘RV308/DM-89(F-5)

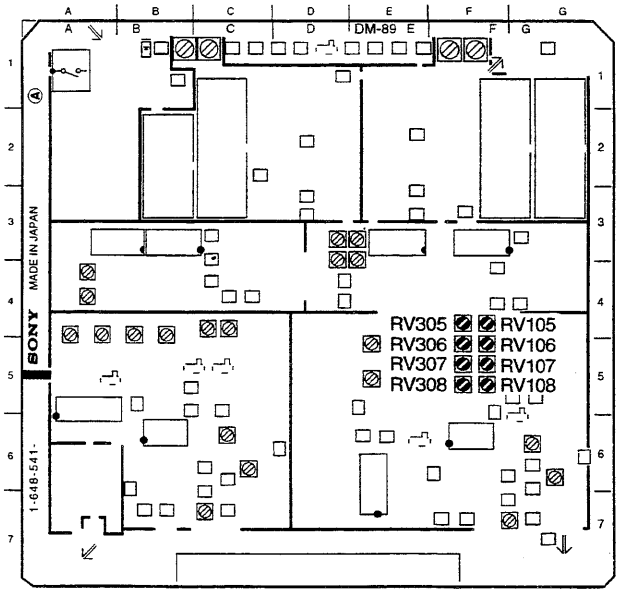

8-6-3. Demodulator Limiter Balance Adjustment

Preparations for adjustment	Specifications	Adjustments
Step 1 • Connect CH-1 and CH-2 of the oscilloscope to TP4 and TP501 on the DM-89 board. • Play back the flat field signal portion (24:00-26:00) of the alignment tape CR5-1B PS.	Spectrum analyzer TP501/DM-89(F-4) 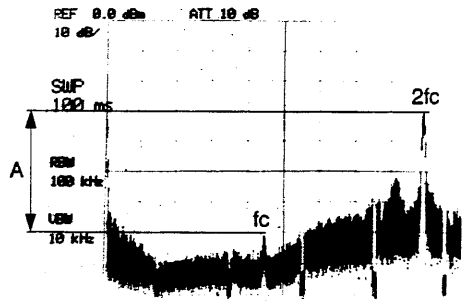 Maximize the A. (Minimize the fc.)	(Y DEMOD BALANCE) ⊘RV502/DM-89(E-3) TRIG: TP4/DM-89 (E-1)
Incase spectrum analyzer is not available, set RV502 as shown right figure.	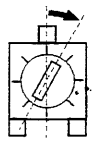	

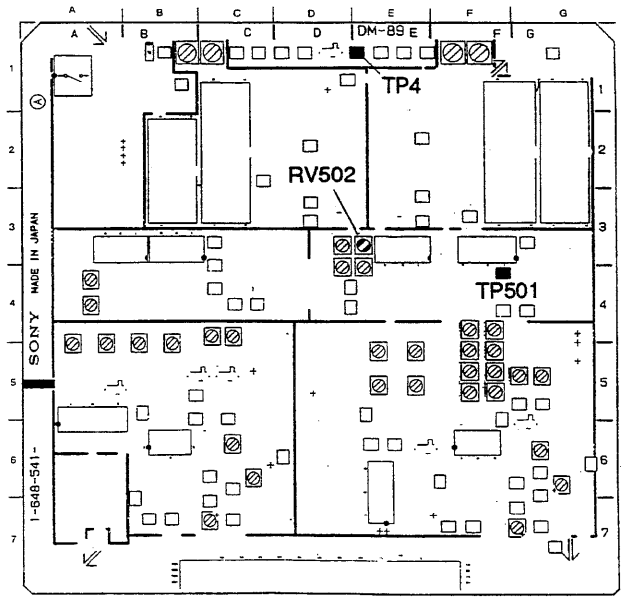

Preparations for adjustment	Specifications	Adjustments
Step 2 • Connect CH-2 of the oscilloscope to TP8 on the DM-89 board. • Play back the color bars signal portion (14:00-16:30) of the alignment tape CR5-1B PS.	Oscilloscope TP8/DM-89(C-1) 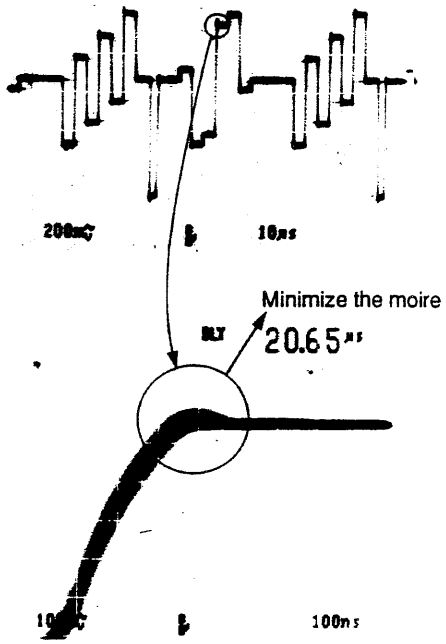 	(C DEMOD BALANCE) ⊘RV702/DM-89(A-4)

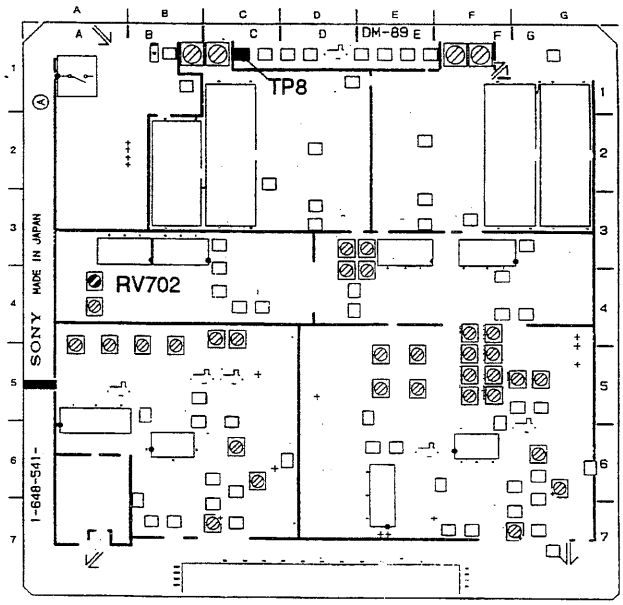

8-6-4. PB Frequency Response Adjustment

Preparations for adjustment	Specifications	Adjustments
• Enter "A32:DM VR 1" menu in the "A3:BETACAM PB ADJUST" in the maintenance mode. • Connect the waveform monitor or the oscilloscope to COMPONENT Y OUTPUT connector (terminated by 75 Ω). **Step 1** • Play back the multi burst signal portion (8:00-11:00) of the alignment tape CR5-1B PS.	Waveform monitor or oscilloscope COMPONENT Y OUT 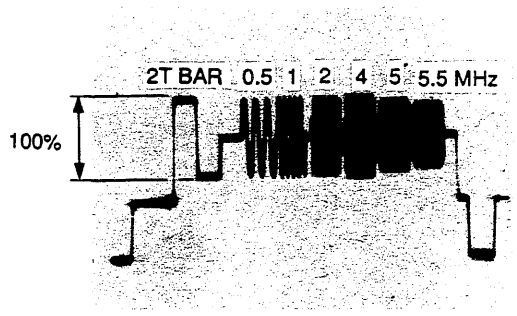 (1) 2T BAR reference 100% (or 0 dB) 4.0 MHz = 100% (104 through 95%) ($0^{+0.3}_{-0.4}$ dB) (2) Check the levels for following frequencies. 0.5 MHz = 100% (106 through 71%) ($0^{+0.5}_{-3.0}$ dB) 1.0 MHz = 100% (106 through 71%) ($0^{+0.5}_{-3.0}$ dB) 2.0 MHz = 100% (106 through 71%) ($0^{+0.5}_{-3.0}$ dB) 5.0 MHz = 100% (106 through 71%) ($0^{+0.5}_{-3.0}$ dB) 5.5 MHz = 84% (106 through 71%) ($-1.5^{+2.0}_{-1.5}$ dB) (3) Flicker should not be on the monitor picture.	A32:DM VR 1 EQ 1 METAL-Y-A ↓ Level Adjustment ↓ EQ 1 METAL-Y-B ↓ Level Adjustment TRIG:REF.VIDEO
Step 2 • Play back the multi burst signal portion (3:00-6:00) of the alignment tape CR5-2A PS.	Waveform monitor or oscilloscope COMPONENT Y OUT 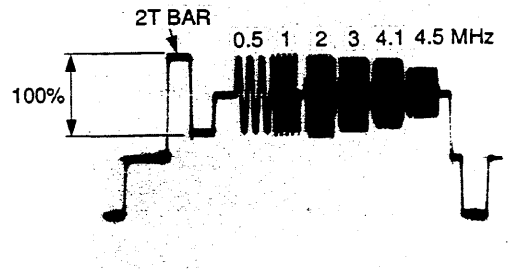 (1) 2T BAR reference 100% (or 0 dB) 3.0 MHz = 89% (100 through 79%) (-1.0 ±1.0 dB) (2) Check the levels for following frequencies. 0.5 MHz = 100% (106 through 50%) ($0^{+0.5}_{-6.0}$ dB) 1.0 MHz = 100% (106 through 50%) ($0^{+0.5}_{-6.0}$ dB) 2.0 MHz = 98% (106 through 50%) ($0.2^{+0.3}_{-6.2}$ dB) 4.1 MHz = 71% (106 through 50%) ($-3.0^{+3.5}_{-3.0}$ dB) (3) Flicker should not be on the monitor picture.	EQ 1 OXIDE-Y-A ↓ Level Adjustment ↓ EQ 1 OXIDE-Y-B ↓ Level Adjustment TRIG:REF.VIDEO

Continues to next page.

Preparations for adjustment	Specifications	Adjustments
Step 3 • Connect the waveform monitor or the oscilloscope to COMPONENT R-Y/B-Y OUTPUT connector (terminated by 75 Ω). • Play back the multi burst signal portion (8:00-11:00) of the alignment tape CR5-1B PS.	Waveform monitor or oscilloscope COMPONENT R-Y/B-Y OUT 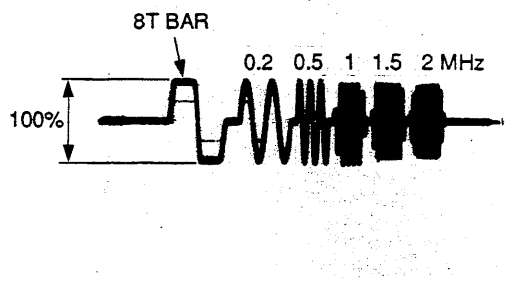 (1) R-Y 8T BAR reference 100% (or 0 dB) 1.5 MHz = 93% (102 through 85%) (-0.6 ±0.8 dB) (2) Check the levels for following frequencies. 0.2 MHz = 100% (106 through 71%) (0 $^{+0.5}_{-3.0}$ dB) 0.5 MHz = 100% (106 through 71%) (0 $^{+0.5}_{-3.0}$ dB) 1.0 MHz = 100% (106 through 71%) (0 $^{+0.5}_{-3.0}$ dB) 2.0 MHz = 79% (106 through 71%) (-2.0 $^{+2.5}_{-1.0}$ dB) (3) Check the waveform of B-Y meets the specifications above. If it does not, perform fine adjustments so that both waveforms of R-Y and B-Y meet the specifications.	EQ 1 METAL-C-A ↓ Level Adjustment ↓ EQ 1 METAL-C-B ↓ Level Adjustment TRIG:REF.VIDEO
Step 4 • Play back the multi burst signal portion (3:00-6:00) of the alignment tape CR5-2A PS.	Waveform monitor or oscilloscope COMPONENT R-Y/B-Y OUT 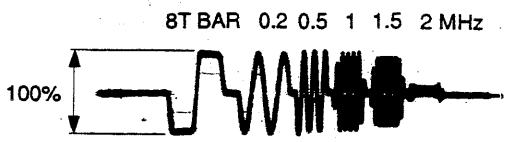 (1) R-Y 8T BAR reference 100% (or 0 dB) 1.0 MHz = 94% (104 through 86%) (-0.5 ±0.8 dB) (2) Check the levels for following frequencies. 0.2 MHz = 100% (106 through 71%) (0 $^{+0.5}_{-3.0}$ dB) 0.5 MHz = 100% (106 through 71%) (0 $^{+0.5}_{-3.0}$ dB) 1.5 MHz = 84% (106 through 71%) (-1.5 $^{+2.0}_{-1.5}$ dB) (3) Check the waveform of B-Y meets the specifications above. If it does not, perform fine adjustments so that both waveforms of R-Y and B-Y meet the specifications.	EQ 1 OXIDE-C-A ↓ Level Adjustment ↓ EQ 1 OXIDE-C-B ↓ Level Adjustment ↓ MENU TRIG:REF.VIDEO
Step 5 • Enter "A3F:NV-RAM CONTROL" menu. • Save adjustment data. • Exit the maintenance mode.		A3F:NV-RAM CONTROL SAVE ALL ADJUST DATA SET ↓ MENU MENU Press several times.

8-6-5. DM RF Output Level Adjustment (For Board No. suffix 11, 12)

Note **The adjustment for board's No. suffix 13 is not necessary.**

Preparations for adjustment	Specifications	Adjustments
• Enter "A31:DM VR 0" menu in the "A3:BETACAM PB ADJUST" in the maintenance mode. **Step 1** • Connect CH-1 and CH-2 of the oscilloscope to TP3 and TP4 on the DM-89 board. • Play back the flat field signal portion (24:00-26:00) of the alignment tape CR5-1B PS.	Oscilloscope TP3/DM-89(E-1) 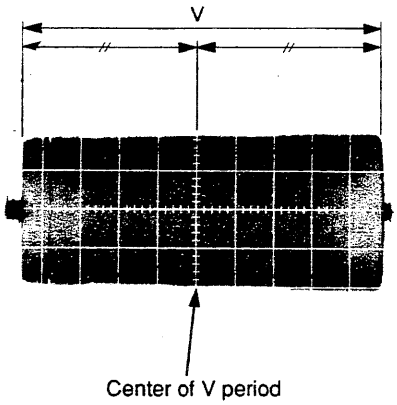 A = 400 ± 40 mV p-p	A31:DM VR 0 RF LEVEL METAL-Y-A ↓ Level Adjustment ↓ RF LEVEL METAL-Y-B ↓ Level Adjustment TRIG:TP4/DM-89(E-1)
Step 2 • Connect CH-1 and CH-2 of the oscilloscope to TP3 and TP4 on the DM-89 board. • Play back the 75% color bars signal portion (0:00-3:00) of the alignment tape CR5-2A PS.	Oscilloscope TP3/DM-89(B-7) 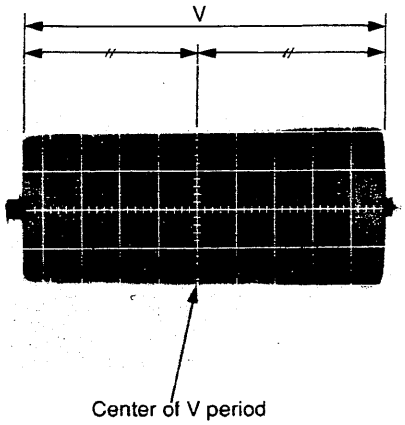 A = 400 ± 40 mV p-p	RF LEVEL OXIDE-Y-A ↓ Level Adjustment ↓ RF LEVEL OXIDE-Y-B ↓ Level Adjustment TRIG:TP4/DM-89(E-21)

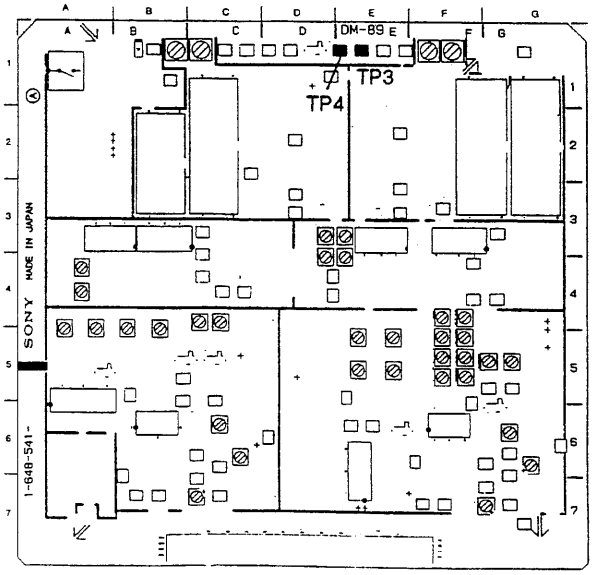

Preparations for adjustment	Specifications	Adjustments
Step 3 • Connect CH-1 and CH-2 of the oscilloscope to TP7 and TP4 on the DM-89 board. • Play back the flat field signal portion (24:00-26:00) of the alignment tape CR5-1B PS.	Oscilloscope TP7/DM-89(D-1) 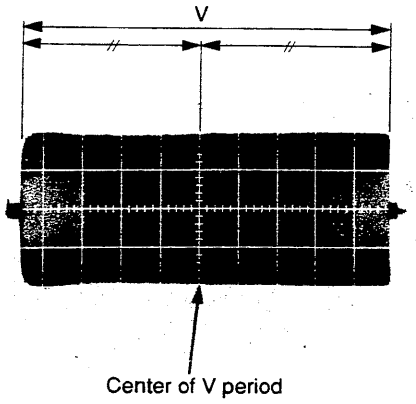 A = 400 ± 40 mV p-p	RF LEVEL METAL-C-A ↓ Level Adjustment ↓ RF LEVEL METAL-C-B ↓ Level Adjustment TRIG:TP4/DM-89(E-1)

Continues to next page.

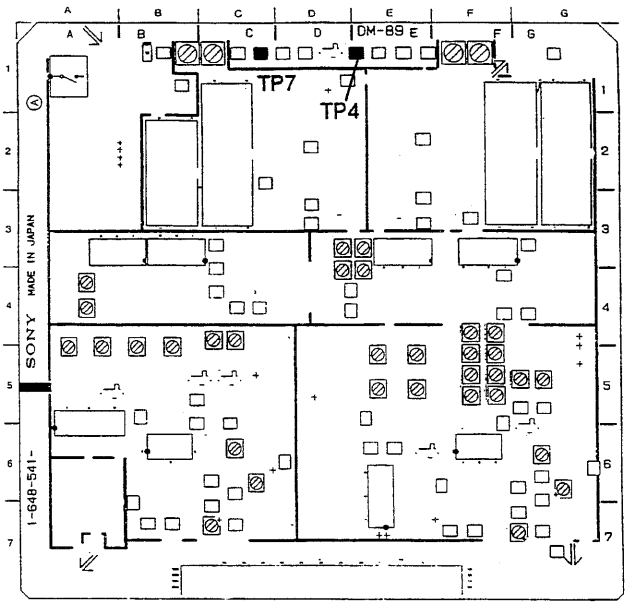

Preparations for adjustment	Specifications	Adjustments
Step 4 • Connect CH-1 and CH-2 of the oscilloscope to TP7 and TP4 on the DM-89 board. • Play back the 75% color bars signal portion (0:00-3:00) of the alignment tape CR5-2A PS.	Oscilloscope TP7/DM-89(D-1) 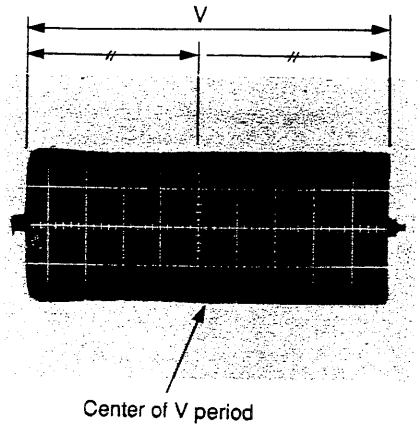 A = 400 ± 40 mV p-p	RF LEVEL OXIDE-C-A ↓ Level Adjustment ↓ RF LEVEL OXIDE-C-B ↓ Level Adjustment ↓ MENU TRIG:TP4/DM-89(E-1)
Step 5 • Enter "A3F:NV-RAM CONTROL" menu. • Save adjustment data. • Exit the maintenance mode.		A3F:NV-RAM CONTROL SAVE ALL ADJUST DATA SET ↓ MENU ⋮ MENU Press several times.

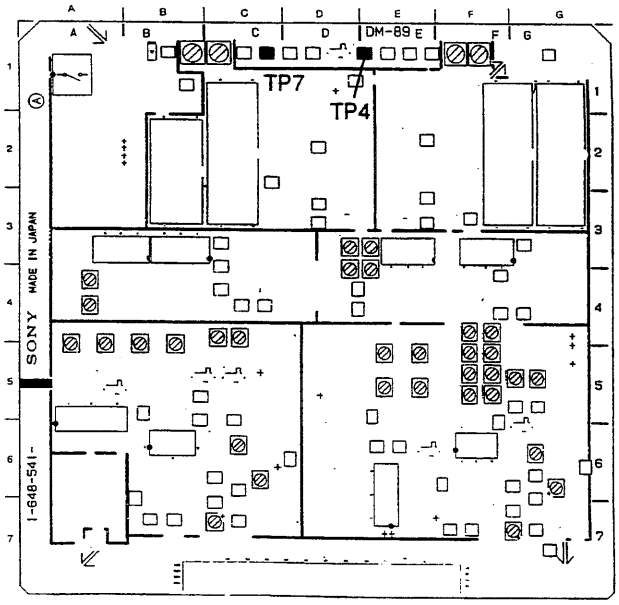

8-6-6. DM RF Envelope Check

Preparations for adjustment	Specifications	Adjustments
Step 1 • Connect CH-1 and CH-2 of the oscilloscope to TP203 and TP4 on the DM-89 board. • Play back the flat field signal portion (24:00-26:00) of the alignment tape CR5-1B PS.	Oscilloscope TP203/DM-89(G-6) A = 2.0 ± 0.2 V dc	When the specification is not met: ⊘RV205/DM-89(G-6) TRIG:TP4/DM-89(E-1)
Step 2 • Connect CH-1 and CH-2 of the oscilloscope to TP403 and TP4 on the DM-89 board. • Play back the flat field signal portion (24:00-26:00) of the alignment tape CR5-1B PS.	Oscilloscope TP403/DM-89(D-6) 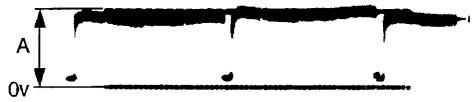 A = 2.0 ± 0.2 V dc	When the specification is not met: ⊘RV405/DM-89(C-6) TRIG:TP4/DM-89(E-1)

Board suffix No. 13 and later

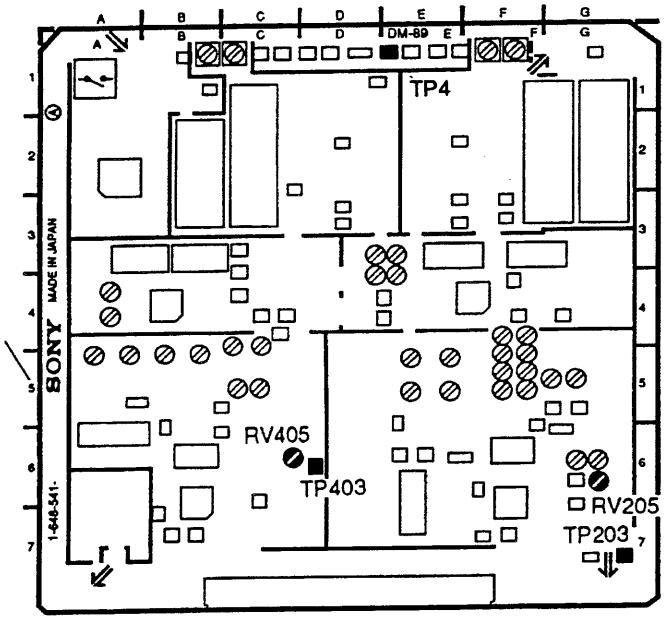

Board suffix No. 11, 12

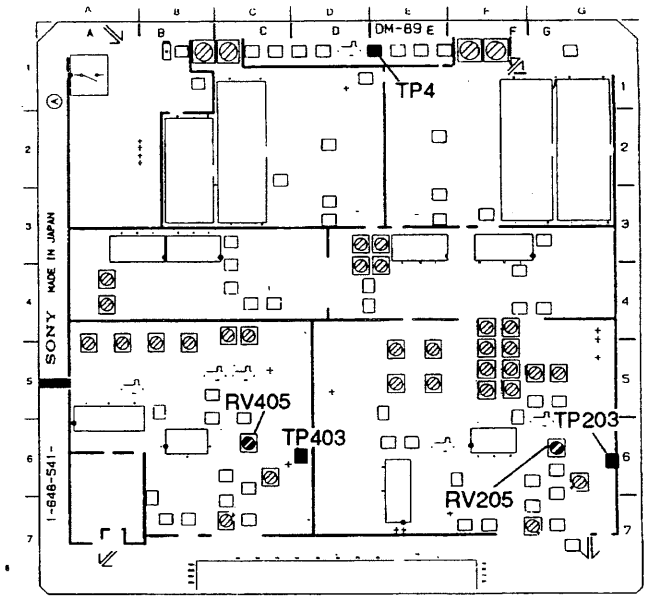

8-6-7. TBC Y/C Delay Check

Preparations for adjustment	Specifications	Adjustments
• CAPSTAN LOCK switch/sub control panel: 2FD • Connect the waveform monitor to COMPONENT OUTPUT connector. CH-1: Y OUTPUT CH-2: B-Y OUTPUT CH-3: R-Y OUTPUT **Step 1** • Play back the bowtie signal portion (17:00-19:00) of the alignment tape CR5-1B PS.	COMPONENT WAVEFORM MONITOR: BOWTIE mode COMPONENT OUTPUT 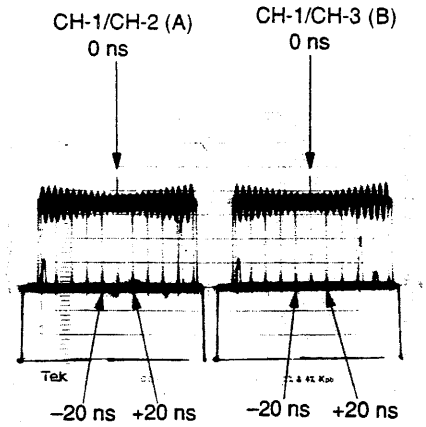 Set the BOWTIE DIP points of (A) and (B) on the center marker. 0 ±10 ns	(METAL Y/C DELAY) ⊘RV500/TBC-24(B-1) TRIG:EXT/WFM

Continues to next page.

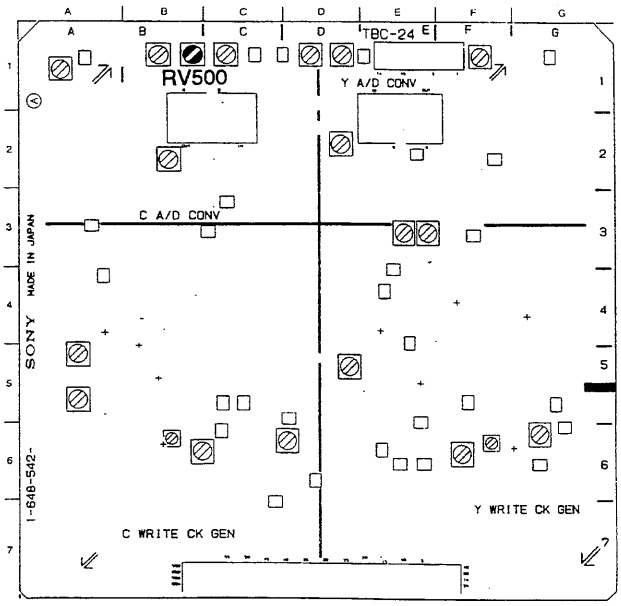

Preparations for adjustment	Specifications	Adjustments
Step 2 • Play back the bowtie signal portion (6:00-9:00) of the alignment tape CR5-2A PS	COMPONENT WAVEFORM MONITOR: BOWTIE mode COMPONENT OUTPUT 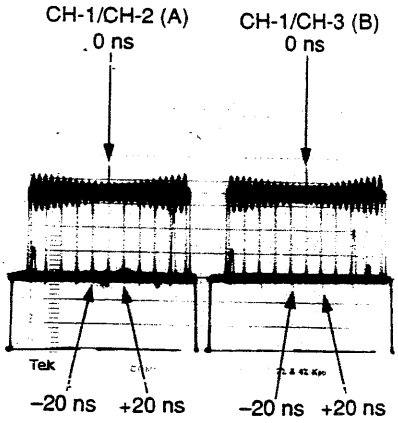 Set the BOWTIE DIP points of (A) and (B) on the center marker. 0 ± 10 ns	(OXIDE Y/C DELAY) ◐RV501/TBC-24(C-1) TRIG:EXT/WFM

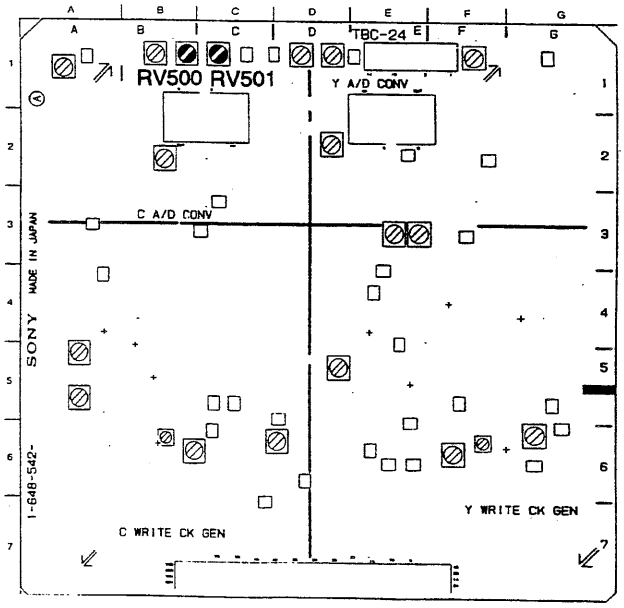

8-6-8. Y and C Error Offset Check

Preparations for adjustment	Specifications	Adjustments
• Play back the color bars with drop out signal portion (26:00-28:00) of the alignment tape CR5-1B PS. • CHARACTER switch/sub control panel:OFF • Connect a picture monitor to VIDEO OUTPUT COMPOSITE 3 connector.	PICTURE MONITOR VIDEO OUTPUT COMPOSITE 3 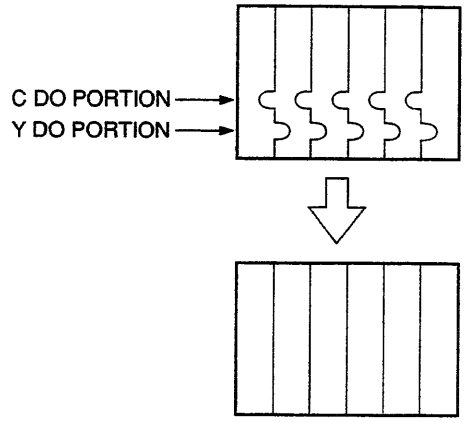 	(Y ERR CLIP) ⊘RV401/TBC-24(F-6) (C ERR CLIP) ⊘RV601/TBC-24(C-6)
• After adjustment is completed, set the CHARACTER switch to ON.	(A) The Y DO portions should disappear on the monitor display by RV401. (B) The C DO portions should disappear on the monitor display by RV601.	

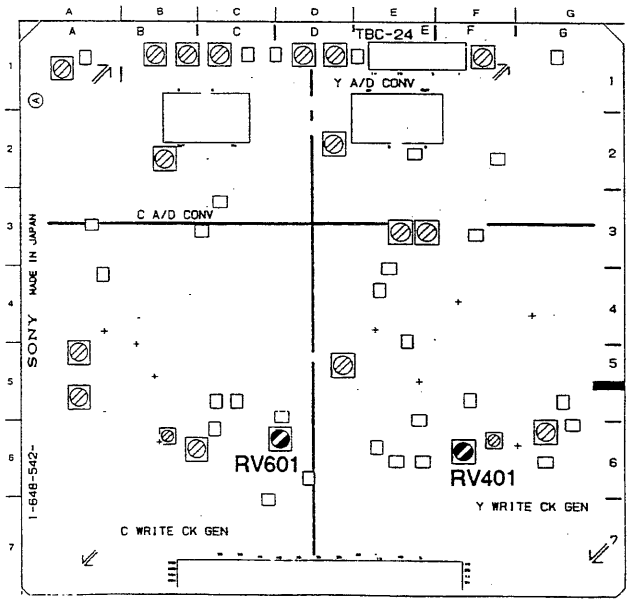

8-6-9. AFM RF Level Adjustment

Preparations for adjustment	Specifications	Adjustments
• 20 MHz BW LIMIT switch/ oscilloscope: ON • Connect CH-1 and CH-2 of the oscilloscope to TP306 and TP401(TP451) on the AP-28 board. • Play back the color bars signal portion (14:00-16:30) of the alignment tape CR5-1B PS.	Oscilloscope TP401/AP-28(G-4) ..... ADJ TP451/AP-28(F-4) ..... Check A = 450 ± 100 mV p-p	⊘RV301/AP-28(C-5) TRIG:TP306/AP-28(G-7)

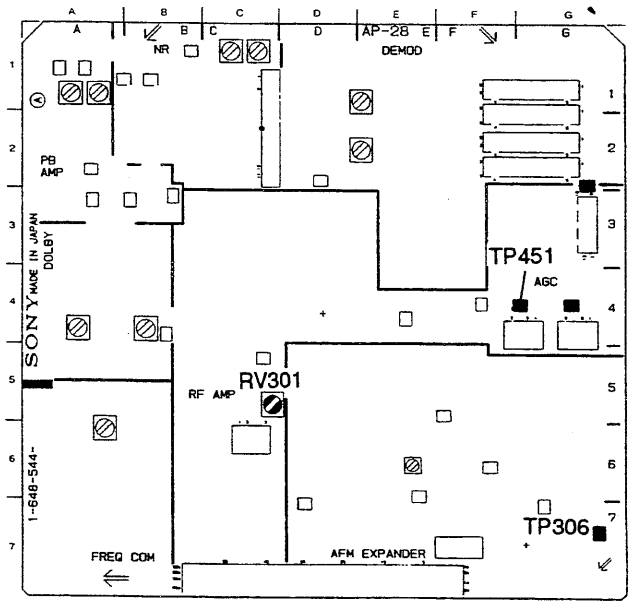

8-7. ADJUSTMENT AFTER AUDIO/TC HEAD REPLACEMENT

[Item List]

No.	ITEMS	BOARDS	ADJUSTMENTS	NOTES
1	AUDIO PB FREQ RESPONSE OXIDE	CUE-1	RV106, RV108	CH1
		CUE-1	RV107, RV110	CH2
2	AUDIO PB FREQ RESPONSE METAL	CUE-1	RV109	CH1
		CUE-1	RV111	CH2
3	AP DOLBY LEVEL	AP-28	RV102	TP102
		AP-28	RV202	TP202
4	LAU PB LEVEL	AP-28	RV103	CH1
		AP-28	RV203	CH2
5	LAU PB PHASE	AP-28	RV201	CH1, CH2
6	CUE PB FREQ RESPONSE	CUE-1	RV901	CUE
7	CUE PB LEVEL	CUE-1	RV114	TP110
		CUE-1	RV120	CUE
8	CH ERASE CURRENT	CUE-1	LV500	TP505(X), TP502(G)
		CUE-1	RV502	TP505(X), TP502(G)
		CUE-1	LV501	TP507(X), TP504(G)
9	BIAS TUNE, TRAP	CUE-1	T500	TP500
		CUE-1	LV100, LV101	TP103
10	BIAS CURRENT	CUE-1	RV500	TP105(X), TP106(G)
11	CUE OA (ROUGH)	CUE-1	CHECK	CUE
		CUE-1	RV100	TP100
12	CUE OA FREQ RESPONSE	CUE-1	CHECK	CUE
		CUE-1	RV103, LV102	TP100
13	CUE OA LEVEL	CUE-1	RV100	CUE
14	CUE OA DISTORTION CHECK	CUE-1	CHECK	CUE
15	LTC PB LEVEL CHECK	CUE-1	CHECK	TP402
16	LTC OA CHECK	CUE-1	CHECK	TP401
			CHECK	TC OUT
		CUE-1	CHECK	TP402
17	TC INS CROSSTALK	CUE-1	RV400, RV401	CUE
18	CUE ERASURE RATIO		CHECK	CUE

[Equipment]

- Oscilloscope (SONY TEKTRONIX 2465B or equivalent)
- Audio Signal Generator (SONY TEKTRONIX SG505-option 02 or equivalent)
- Audio analyzer (SONY TEKTRONIX AA501A-option 02 or equivalent)
  Note: Audio analyzer should be filtered through 80 kHz L.P.F unless otherwise specified.
- Audio level meter
- Blank Tape Digital Betacam cassette
  Note: "Blank Tape" indicates a cassette tape on which no video/audio signals are recorded.

- Alignment tape ZR5-1P (part No. 8-960-073-51)

Contents

TIME min.:sec.	CTL	VIDEO	D-AUDIO	CUE	TIME min.:sec.
00 : 00					00 : 00
		Color Bars (100%)	1 kHz -20 dB FS	1 kHz 0 VU	
				Blank	01 : 25
					01 : 30
02 : 00				1 kHz -20 VU	
				Blank	02 : 25
					02 : 30
				3 kHz -20 VU	
				Blank	02 : 55
			1 kHz 0 dB FS		03 : 00
				7 kHz -20 VU	
				Blank	03 : 25
					03 : 30
				10 kHz -20 VU	
				Blank	03 : 55
04 : 00					04 : 00
				12 kHz -20 VU	
				Blank	04 : 25
					04 : 30
			-∞ dB FS	90 Hz -20 VU	
				Blank	04 : 55
					05 : 00
06 : 00					
			20 Hz -20 dB FS	Repeat	
08 : 00					
			20 kHz -20 dB FS		
10 : 00					10 : 00
		Ramp	Repeat	Repeat	
20 : 00					20 : 00

- Alignment tape CR8-1B PS (part No. 8-960-096-86)

Contents

TIME min.: sec.	AUDIO TRACK	VIDEO TRACK	CTL TRACK
0 : 00	1 kHz, 0 VU *1	Black Burst	CTL
3 : 00	15 kHz, 0 VU	Black Burst	CTL
5 : 00	1 kHz, -20 VU	Black Burst	CTL
6 : 00	40 Hz, -20 VU*2	Black Burst	CTL
6 : 30	7 kHz, -20 VU*2		
7 : 00	10 kHz, -20 VU*2		
7: 30	15 kHz, -20 VU*2		
8 : 00	1 kHz, 0 VU	—	1 kHz sine wave
10 : 00			

- Alignment tape CR8-1A PS (part No. 8-960-098-45)

Contents

TIME min.: sec.	AUDIO TRACK	VIDEO TRACK	CTL TRACK
0 : 00	1 kHz, 0 VU *1	—	CTL
2 : 55	Blank		
3 : 00	10 kHz, -10 VU	—	CTL
4 : 55	Blank		
5 : 00	1 kHz, -20 VU	—	CTL
5 : 55	Blank		
6 : 00	40 Hz, -20 VU*2	—	CTL
6 : 25	Blank		
6 : 30	7 kHz, -20 VU*2	—	CTL
6 : 55	Blank		
7 : 00	10 kHz, -20 VU*2	—	CTL
7 : 25	Blank		
7 : 30	15 kHz, -20 VU*2	—	CTL
7 : 55	Blank		
8 : 00	1 kHz, 0 VU	—	1 kHz, 0 VU
10 : 00			

- Alignment tape CR5-1B PS (part No. 8-960-096-91)

Contents

TIME min.:sec.	VIDEO TRACK	AFM	CTL
0 : 00	RF Sweep	No Signal	CTL
2 : 00	60% H Sweep (CTDM)		
5 : 00	Pulse & Bar (CTDM)		
8 : 00	60% Multi Burst		
11 : 00	Pulse & Bar		
14 : 00	100% Color Bars	400 Hz SINE WAVE 25 kHz DEVIATION	
16 : 30		75 kHz DEVIATION	
17 : 00	50% Bowtie & 10T	No Signal	
19 : 00	Line 17 Signal		
22 : 00	Quad Phase		
24 : 00	Flat Field		
26 : 00	100% Color Bars with Dropout		
28 : 00	Composite H Sweep with VISC		
30 : 00			

*1. When this tape is reproduced in the audio reference level check or adjustment, the output level (0 dB) should be corrected according to the correction value as follows.

Example: Correction value = –0.5 dB
Output level = 0 dB –0.5 dB = –0.5 dB

*2. When this tape is reproduced in the audio frequency response check or adjustment, the output level should be corrected according to the correction value.

[Switch Setting]

Upper/Lower Control Panel

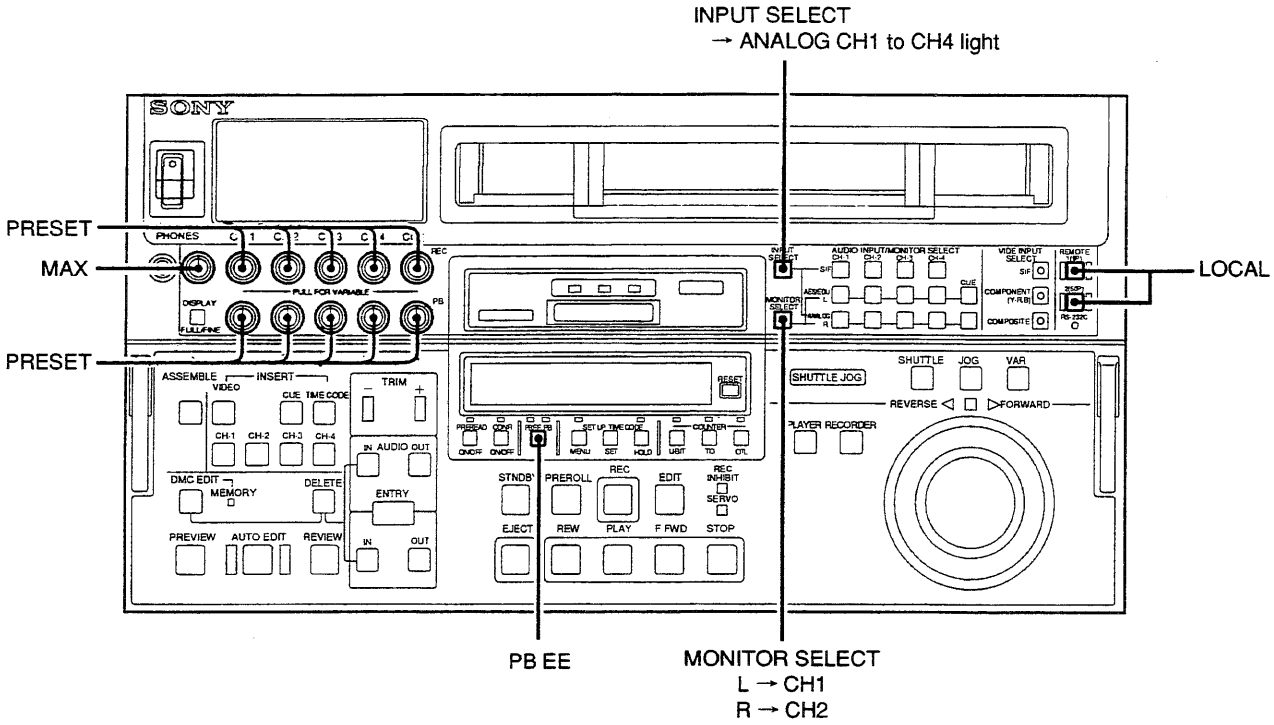

Sub Control Panel

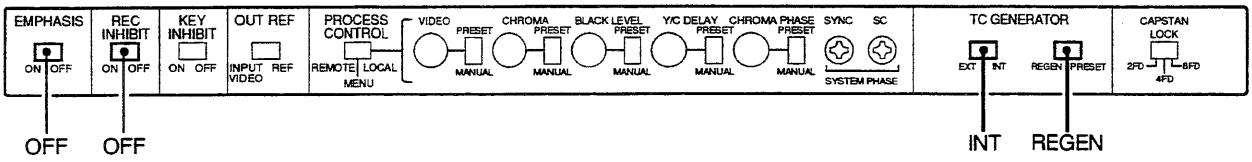

System Set-up Panel

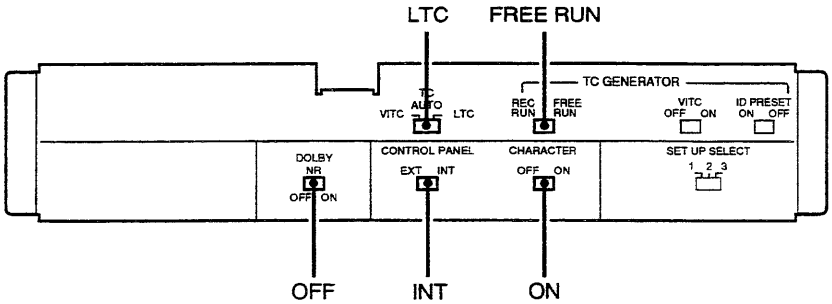

Connector Panel

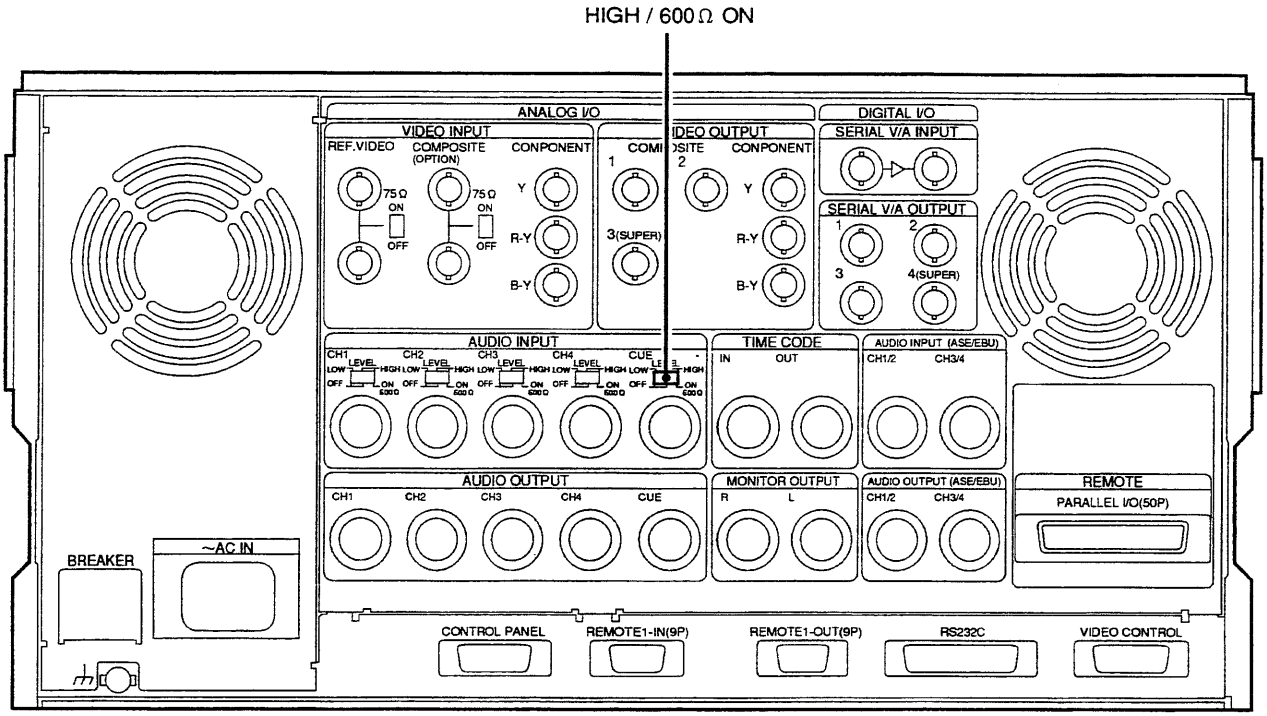

APR-1 board (Board Suffix No. 16 and higher)

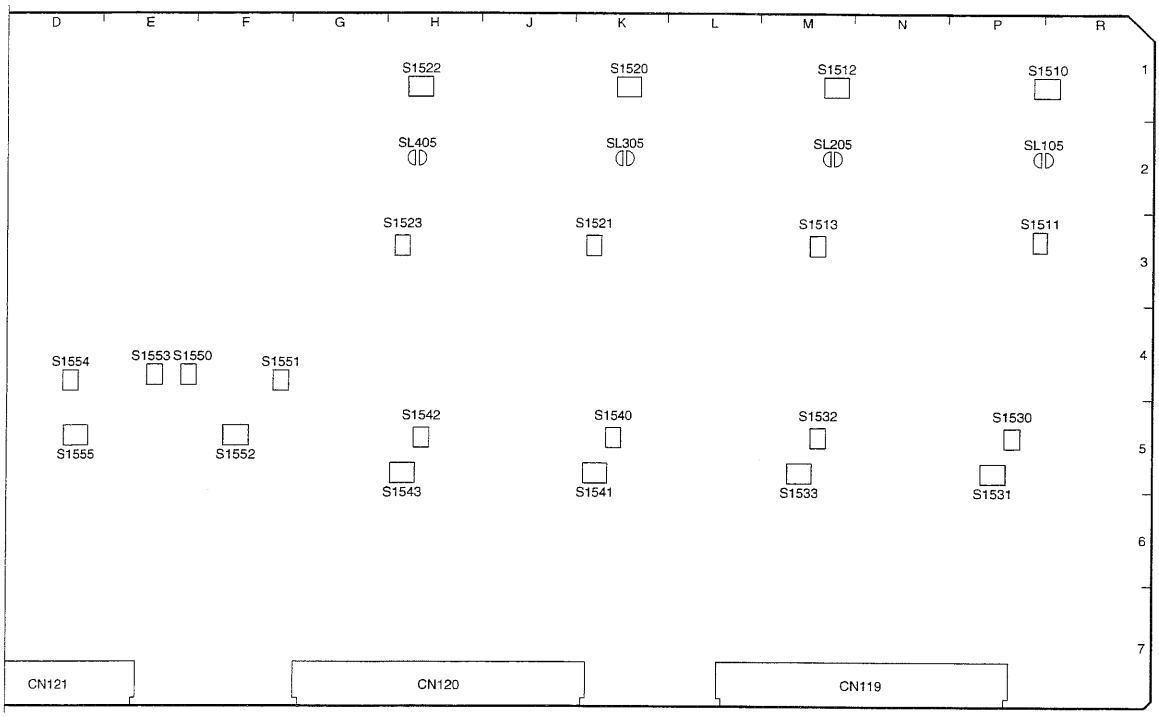

Selecting output level

Audio Channel	Ref. No.	Output Level (dBm/600 Ω)				Fine Adjustment (Address No.)
		+4	0	–3	–20	
CH1	S1531-1 S1531-2 S1531-3 S1531-4	ON OFF OFF OFF	OFF ON OFF OFF	OFF OFF ON OFF	OFF OFF OFF ON	RV500 (P-5)
CH2	S1533-1 S1533-2 S1533-3 S1533-4	ON OFF OFF OFF	OFF ON OFF OFF	OFF OFF ON OFF	OFF OFF OFF ON	RV501 (M-5)
CH3	S1541-1 S1541-2 S1541-3 S1541-4	ON OFF OFF OFF	OFF ON OFF OFF	OFF OFF ON OFF	OFF OFF OFF ON	RV700 (K-5)
CH4	S1543-1 S1543-2 S1543-3 S1543-4	ON OFF OFF OFF	OFF ON OFF OFF	OFF OFF ON OFF	OFF OFF OFF ON	RV701 (H-5)
MONITOR L-CH	S1552-1 S1552-2 S1552-3 S1552-4	ON OFF OFF OFF	OFF ON OFF OFF	OFF OFF ON OFF	OFF OFF OFF ON	RV901 (F-5)
MONITOR R-CH	S1555-1 S1555-2 S1555-3 S1555-4	ON OFF OFF OFF	OFF ON OFF OFF	OFF OFF ON OFF	OFF OFF OFF ON	RV902 (D-5)
FACTORY SETTING		○				

APR-1 board (Board Suffix No. 11, 12, 13, 14, 21, 22, 23, 31, 32, 33)

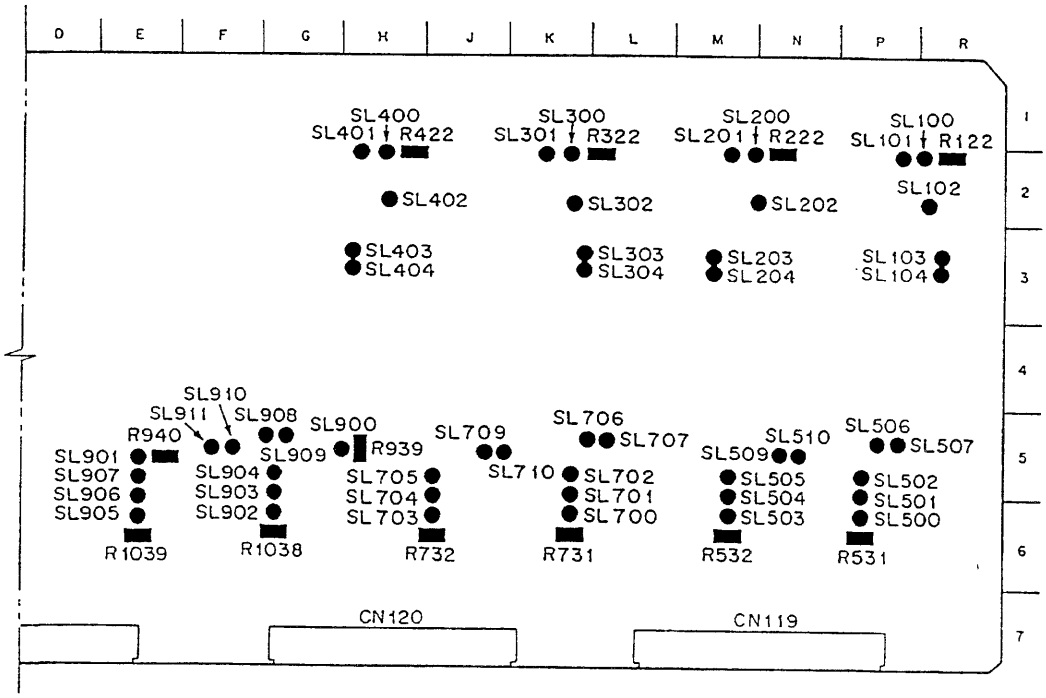

Selecting output level

Audio Channel	Ref. No.	Output Level (dBm/600 Ω)				Fine Adjustment (Address No.)
		+4	0	–3	–20	
CH1	SL500 SL501 SL502 R531	OPEN OPEN OPEN MOUNT	SHORT OPEN OPEN NO MOUNT	OPEN SHORT OPEN NO MOUNT	OPEN OPEN SHORT NO MOUNT	RV500 (P-5)
CH2	SL503 SL504 SL505 R532	OPEN OPEN OPEN MOUNT	SHORT OPEN OPEN NO MOUNT	OPEN SHORT OPEN NO MOUNT	OPEN OPEN SHORT NO MOUNT	RV501 (M-5)
CH3	SL700 SL701 SL702 R731	OPEN OPEN OPEN MOUNT	SHORT OPEN OPEN NO MOUNT	OPEN SHORT OPEN NO MOUNT	OPEN OPEN SHORT NO MOUNT	RV700 (K-5)
CH4	SL703 SL704 SL705 R732	OPEN OPEN OPEN MOUNT	SHORT OPEN OPEN NO MOUNT	OPEN SHORT OPEN NO MOUNT	OPEN OPEN SHORT NO MOUNT	RV701 (H-5)
MONITOR L-CH	SL902 SL903 SL904 R1038	OPEN OPEN OPEN MOUNT	SHORT OPEN OPEN NO MOUNT	OPEN SHORT OPEN NO MOUNT	OPEN OPEN SHORT NO MOUNT	RV901 (F-5)
MONITOR R-CH	SL905 SL906 SL907 R1039	OPEN OPEN OPEN MOUNT	SHORT OPEN OPEN NO MOUNT	OPEN SHORT OPEN NO MOUNT	OPEN OPEN SHORT NO MOUNT	RV902 (E-5)
FACTORY SETTING		○				

CUE-1 board

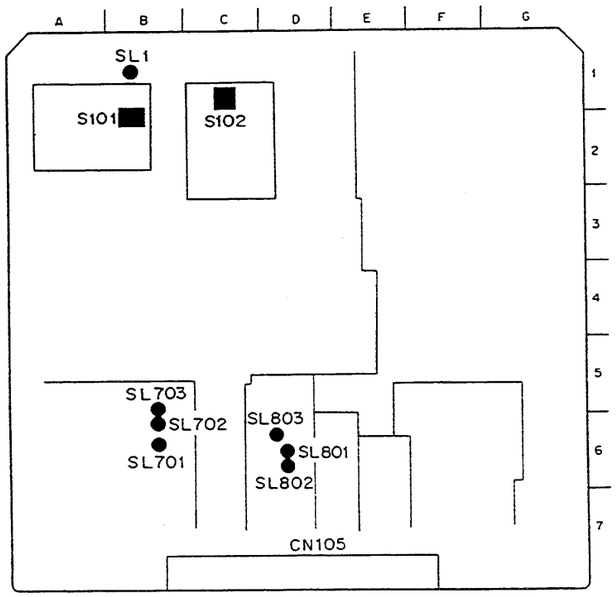

CUE-1 Board (A Side)

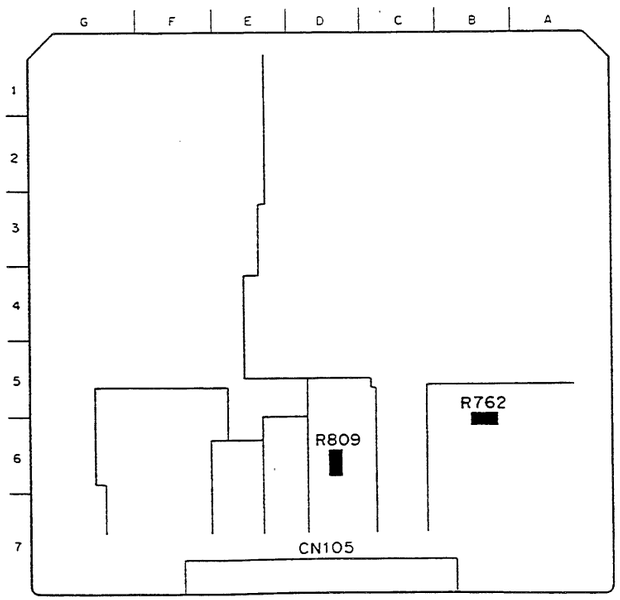

CUE-1 Board (B Side)

8-7. Adjustment After Audio/TC Head Replacement

CUE-1 board, the on-board switch

Switch S101 is not equipped in DVW-500P

Switch No.		Name	Description	FACTORY SETTING
S101	1 2	CH-1 AUDIO HEAD TUNE ADJ. SWITCH	By coupling with RV-106 on the CUE-1 board, adjust the CH-1 head amp high frequency response (head vibration). (Refer to Section 6 in Maintenance Manual Part 1) This switch is used in audio head dumping adjustment. If the switch setting is changed when this adjustment is not performed, audio frequency response may be failed.	When the unit is shipped, this switch is set to the position based on the adjustment condition.
S102	1 2	CH-2 AUDIO HEAD TUNE ADJ. SWITCH	By coupling with RV-107 on the CUE-1 board, adjust the CH-2 head amp high frequency response (head vibration). (Refer to Section 6 in Maintenance Manual Part 1) This switch is used in audio head dumping adjustment. If the switch setting is changed when this adjustment is not performed, audio frequency response may be failed.	When the unit is shipped, this switch is set to the position based on the adjustment condition.

CUE-1 board, the on-board shorting lands and resistor selection
(* : Component attached on B side)

Selecting output level

Ref. No.	Output Level (dBm/600 Ω)			
	+4	0	–3	–20
SL701 SL702 SL703 R762*	OPEN OPEN OPEN 0 Ω MOUNT	SHORT OPEN OPEN NO MOUNT	OPEN SHORT OPEN NO MOUNT	OPEN OPEN SHORT NO MOUNT
FACTORY SETTING	○			

Selecting input level

Ref. No.	Input Level (dBm/600 Ω)			
	+4	0	–3	–20
SL801 SL802 SL803 R809*	OPEN OPEN OPEN 0 Ω MOUNT	SHORT OPEN OPEN NO MOUNT	OPEN SHORT OPEN NO MOUNT	OPEN OPEN SHORT NO MOUNT
FACTORY SETTING	○			

[Preparation]
Set the item "F01: AUDIO NR IN SP MODE" in the set up menu to "1: switch select" during the adjustment.
After adjustment is completed, return to initial setting surely.

8-7-1. Audio PB Frequency Response Adjustment (Oxide) (For DVW-A500P)

Preparations for adjustment	Specifications	Adjustments
Play back the 1 kHz, 40 Hz, 7 kHz, 10 kHz and 15 kHz (–20 VU) signal portions (5:00-8:00) of the alignment tape CR8-1A PS.	ANALOG AUDIO OUTPUT CH1 and CH2 FREQUENCY [Hz] / OUTPUT LEVEL [dB] 1 k / 0 (REF) 40 / $0^{+0.7}_{-1.7}$ 7 k / 0 ±0.4 10 k / 0 ±0.4 15 k / $-1.0^{+0.5}_{-0.2}$ **Note:** Correct the output levels by using correction value of the alignment tape.	CH1 15 kHz: ⊘RV106/CUE-1(B-1) 7 kHz: ⊘RV108/CUE-1(A-1) If the specifications are not met, switch S101 and adjust again. CH2 15 kHz: ⊘RV107/CUE-1(C-1) 7 kHz: ⊘RV110/CUE-1(C-2) If the specifications are not met, switch S102 and adjust again.

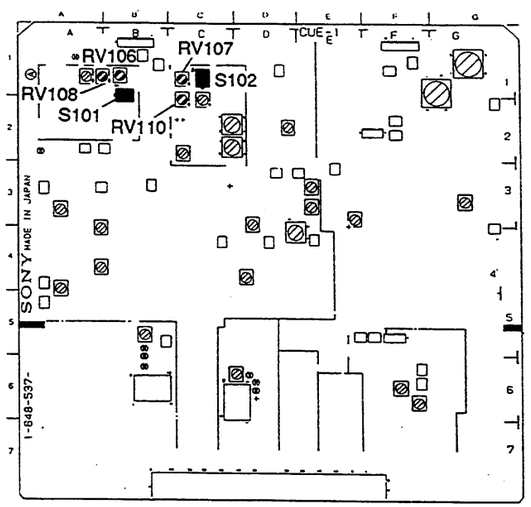

8-7-2. Audio PB Frequency Response Adjustment (Metal) (For DVW-A500P)

<table>
<tr><th>Preparations for adjustment</th><th>Specifications</th><th>Adjustments</th></tr>
<tr>
<td>Play back the 1 kHz, 40 Hz, 7 kHz, 10 kHz and 15 kHz (–20 VU) signal portions (5:00-8:00) of the alignment tape CR8-1B PS.</td>
<td>ANALOG AUDIO OUTPUT CH1 and CH2
<table>
<tr><th>FREQUENCY [Hz]</th><th>OUTPUT LEVEL [dB]</th></tr>
<tr><td>1 k</td><td>0(REF)</td></tr>
<tr><td>40</td><td>$0^{+0.7}_{-1.7}$</td></tr>
<tr><td>7 k</td><td>0 ±0.3</td></tr>
<tr><td>10 k</td><td>0 ±0.4</td></tr>
<tr><td>15 k</td><td>0 ±0.5</td></tr>
</table>
Note: Correct the output levels by using correction value of the alignment tape.</td>
<td>15 kHz
CH1: ⊘RV109/CUE-1(A-1)
CH2: ⊘RV111/CUE-1(C-2)</td>
</tr>
</table>

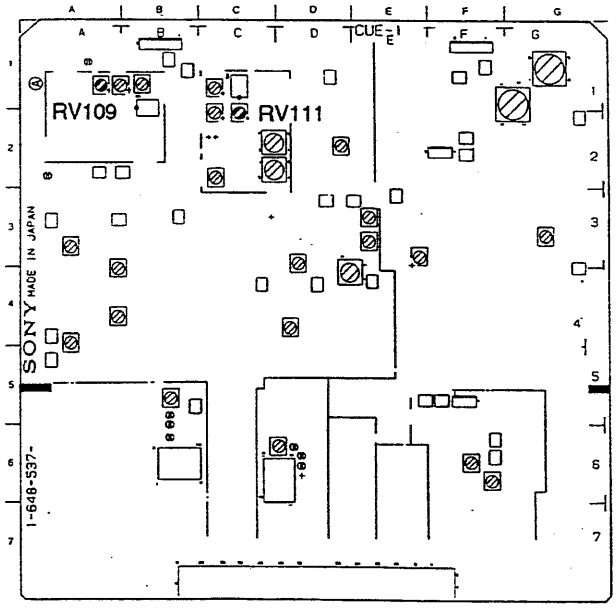

8-7-3. AP Board Dolby Level Adjustment (For DVW-A500P)

Preparations for adjustment	Specifications	Adjustments
• Extend the AP-28 board by extension board EX-377. • Connect the audio level meter to TP102 or TP202 on the AP-28 board. • Turn on the power, and insert the alignment tape CR8-1B PS. • Play back the 1 kHz, 0 VU signal portion (0:00-2:55).	TP102/AP-28(A-3) –10.0 ±0.1 dBu TP202/AP-28(B-3) –10.0 ±0.1 dBu	TP102:⊘RV102/AP-28(A-4) TP202:⊘RV202/AP-28(B-4)

8-7-4. LAU PB Level Adjustment (For DVW-A500P)

Preparations for adjustment	Specifications	Adjustments
Step 1 Play back the 1 kHz, 0 VU signal portion (0:00-2:55) of the alignment tape CR8-1B PS.	ANALOG AUDIO OUTPUT CH1 and CH2 +4.0 ±0.1 dBu (terminated by 600 Ω)	CH1:⊘RV103/AP-28(A-1) CH2:⊘RV203/AP-28(A-1)
Step 2 Play back the 1 kHz, 0 VU signal portion (0:00-2:55) of the alignment tape CR8-1A PS.	ANALOG AUDIO OUTPUT CH1 and CH2 +4.0 ±0.5 dBu (terminated by 600 Ω)	Check

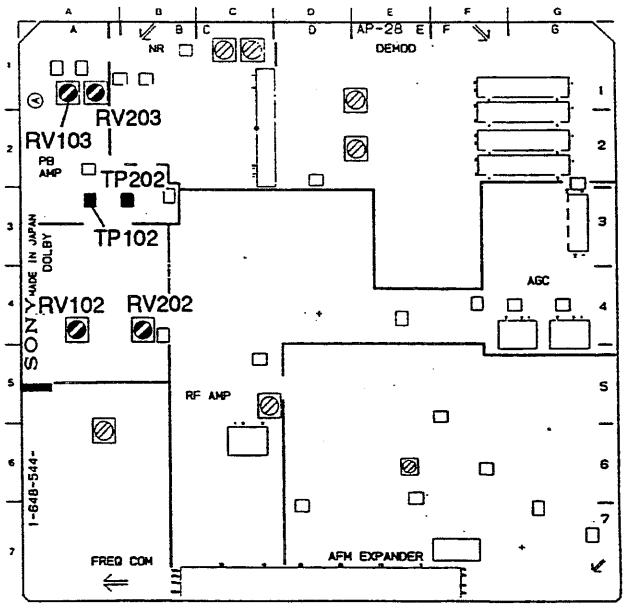

8-7-5. LAU PB Phase Adjustment (For DVW-A500P)

NOTE: Before performing this adjustment, section 8-4-7. Audio/TC Head Azimuth Adjustment should be completed.

Preparations for adjustment	Specifications	Adjustments
• Play back the 15 kHz, 0 VU signal portion (3:00-5:00) of the alignment tape CR8-1B PS. • Observe the lissajous with the oscilloscope.	ANALOG AUDIO OUTPUT CH1 and CH2 (terminated by 600 Ω) 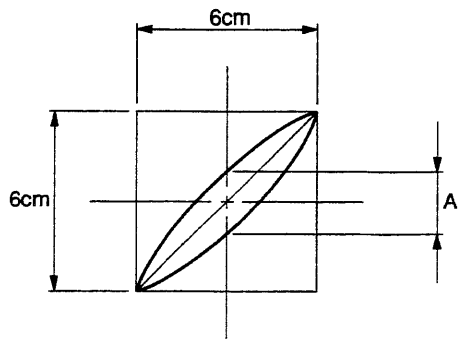 A ≦ 0.52 cm (5° or less)	⊘RV201/AP-28(A-6)

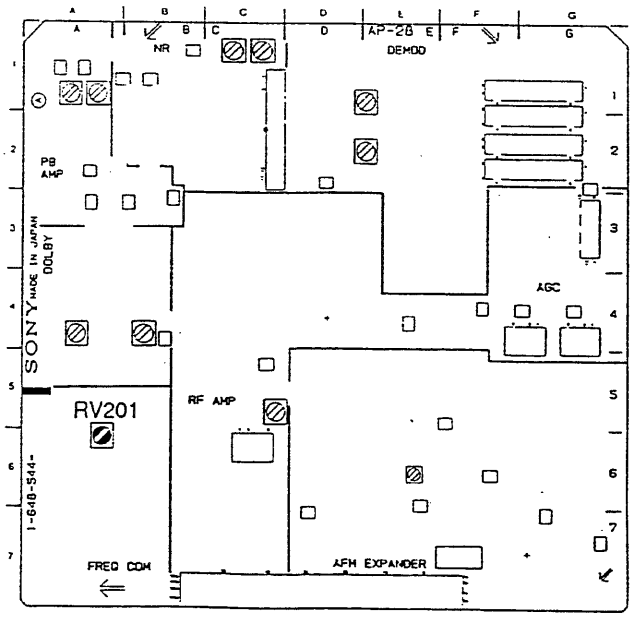

8-7-6. Cue PB Frequency Response Adjustment

Preparations for adjustment	Specifications	Adjustments
• Play back the 1 kHz, 3 kHz, 7 kHz, 10 kHz, 12 kHz and 90 Hz (–20 VU) signal portions (1:30-4:55) of the alignment tape ZR5-1P.	ANALOG AUDIO OUTPUT CUE FREQUENCY [Hz] / OUTPUT LEVEL [dB] 1 k / 0 (REF) 3 k / 0 ±0.5 7 k / 0 ±0.5 10 k / 0 ±0.5 12 k / 0 ±0.5 90 / $0^{+0.7}_{-1.7}$ **Note:** Correct output levels by correction value of the alignment tape	⊘RV901/CUE-1(A-4) As for **DVW-500P**, when the specifications are not met, switch S102 and then perform this adjustment again.

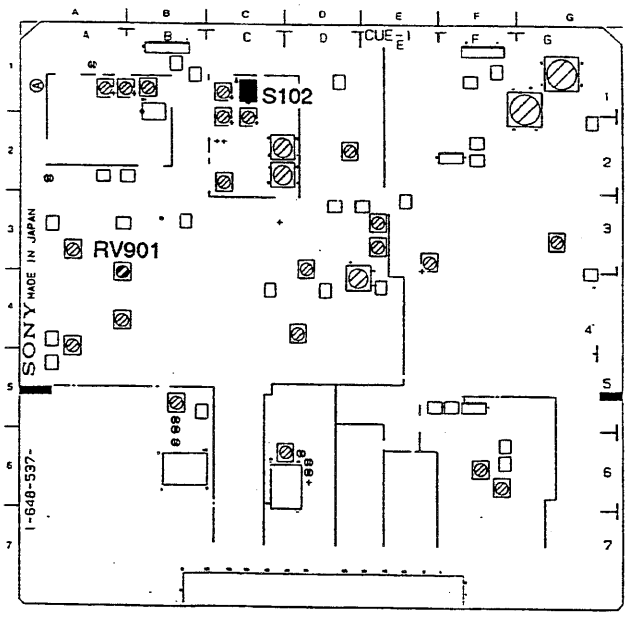

8-7-7. Cue PB Level Adjustment

Up to Boards LOT No.305

Preparations for adjustment	Specifications	Adjustments
Step 1 • Connect the audio level meter to TP110 and E108 on the CUE-1 board. • Play back the 1 kHz, 0 VU signal portion(0:00-1:25) of the alignment tape ZR5-1P.	TP110/CUE-1(C-2) −5.0 ±0.1 dBu	PB LEVEL ADJ ⊘RV114/CUE-1(C-2)
Step 2 • Play back the 1 kHz, 0 VU signal portion(0:00-1:25) of the alignment tape ZR5-1P.	ANALOG AUDIO OUTPUT CUE 4.0 ±0.1 dBu (terminated by 600 Ω)	PB REF ADJ ⊘RV120/CUE-1(A-3)

LOT No.306 and higher

Preparations for adjustment	Specifications	Adjustments
Step 1 • Shorten *TP101 and E108 on the CUE-1 board with a shorting clip. • Play back the 1 kHz, 0 UV signal portion (0:00-1:25) of the alignment tape ZR5-1P.	ANALOG AUDIO OUTPUT CUE 4.0 ±0.1 dBu (terminated by 600 Ω)	PB LEVEL ADJ ⊘RV114/CUE-1(C-2)
Step 2 • Disconnect the shorting clip. • Play back the 1 kHz, 0 VU signal portion (0:00-1:25) of the alignment tape ZR5-1P.	ANALOG AUDIO OUTPUT CUE 4.0 ±0.1 dBu (terminated by 600 Ω)	PB REF ADJ ⊘*RV120/CUE-1(A-3)

Notes

As for LOT No. 306 of the CUE-1 board, read the *marked TP and RV to the follows.

LOT No. 307 and higher : LOT No. 306
TP101 : TP1 (DUS723)
RV120 : RV1 (DUS723)

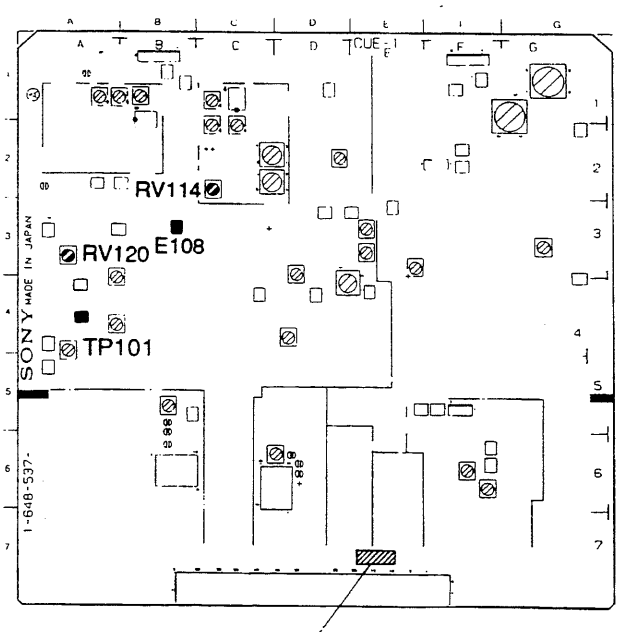

Boards LOT No. 307 and higher

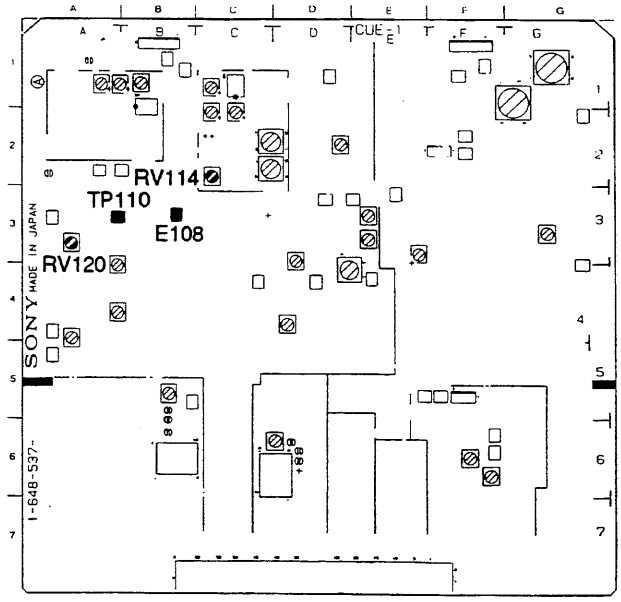

Up to LOT No. 306

8-7-8. Channel Erase Current Check

Preparations for adjustment	Specifications	Adjustments
Step 1 • Connect the audio level meter to TP505(X) and TP502(G) on the CUE-1 board. • Insert a digital tape, and set to REC mode.	TP505/CUE-1(F-1) Maximize the level TP505/CUE-1(F-1) 160 mV rms	⊘LV500/CUE-1(G-1) ⊘RV502/CUE-1(G-3)
• Disconnect the audio level meter, then observe the waveforms of TP505(X) and TP502(G) with the oscilloscope.	Distortion should not be appeared.	CHECK
Step 2 • Connect the audio level meter to TP507(X) and TP504(G) on the CUE-1 board. • Insert a digital tape, and set to REC mode.	TP507/CUE-1(F-1) Maximize the level (The level should be more than 120 mV rms)	⊘LV501/CUE-1(F-1)
• Disconnect the audio level meter, then observe the waveforms of TP507(X) and TP504(G) with the oscilloscope.	Distortion should not be appeared.	CHECK

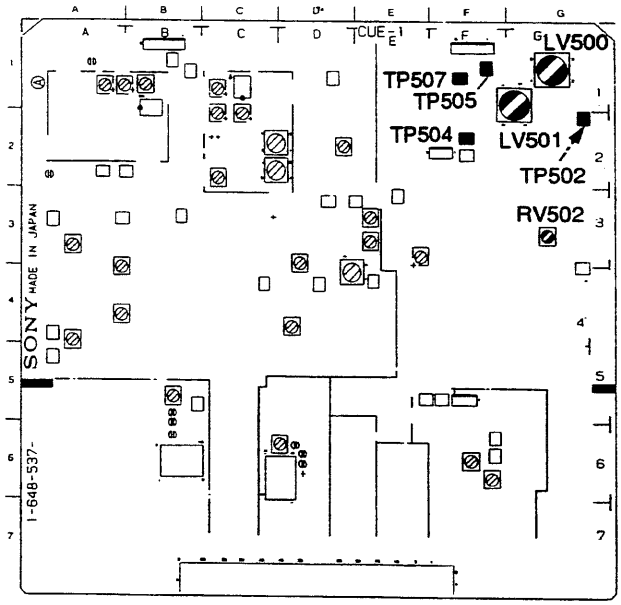

8-7-9. Bias Tune and Bias Trap Adjustment

Preparations for adjustment	Specifications	Adjustments
Step 1 • Connect the oscilloscope to TP500 on the CUE-1 board. • Insert a digital tape, and set to REC mode.	TP500/CUE-1(D-1) Maximize the level.	BIAS TUNE ⊘T500/CUE-1(E-1)
Step 2 • Connect the oscilloscope to TP103 on the CUE-1 board. • Insert a digital tape, and set to REC mode.	TP103/CUE-1(D-3) Minimize the level. (The level should be less than 10 dBu.) LV100 LV101 **Note:** Rotate LV100 and LV101 in parallel.	BIAS TRAP ⊘LV100/CUE-1(C-2) ⊘LV101/CUE-1(C-2)

8-7-10. Bias Current Adjustment

Preparations for adjustment	Specifications	Adjustments
• Connect the audio level meter to TP105(X) and TP106(G) on the CUE-1 board. • Insert a digital tape, and set to REC mode.	TP105/CUE-1(B-1) 16.0 ±0.5 mV rms	⊘RV500/CUE-1(D-2)

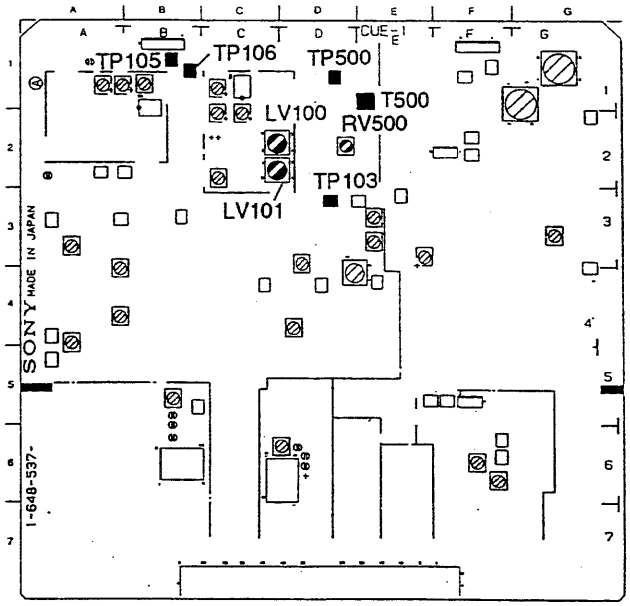

8-7-11. Cue OA Level Rough Check

Preparations for adjustment	Specifications	Adjustments
Step 1 • Supply the 1 kHz, +4.0 dBu signal (terminated by 600 Ω) to AUDIO INPUT CUE on the connector panel. • Insert a digital tape, and set to REC mode. • Play back the recorded portion. • The value of CUE OUT at this time is referred to as "value-1".	AUDIO OUTPUT CUE +4.0 ±0.5 dBu(terminated by 600 Ω) correction value = "value-1" –4.0 If the correction value exceeds ±0.5 dB, perform step 2.	
Step 2 Perform the following when the specification is not met. • Connect the audio level meter to TP100 on the CUE-1 board. • REC mode • The value of the audio level meter at this time is referred to as "value-2".	TP100/CUE-1(E-3) specification = "value-2" –correction value Adjust the level of TP100 to the specification, and check step 1 again.	REC LEVEL ADJ ⊘RV100/CUE-1(E-3)

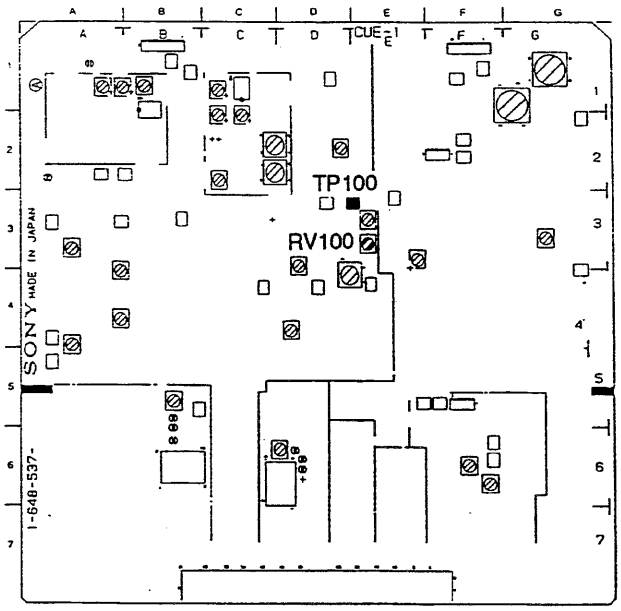

8-7-12. Cue OA Frequency Response Check

<table>
<tr><th>Preparations for adjustment</th><th>Specifications</th><th>Adjustments</th></tr>
<tr><td>

Step 1
- Insert a digital tape, and record the 1 kHz, 7 kHz and 12 kHz (–16 dBu) signals.
- Play back the recorded portion.
- The values of CUE OUT at this time are referred to as "value-1(1),(7) and (12)".

</td><td>

ANALOG AUDIO OUTPUT CUE

"correction value(7) or (12)"="value-1(7) or (12)"–"value-1(1)"

<table>
<tr><th>FREQUENCY [Hz]</th><th>CORRECTION VALUE [dB]</th></tr>
<tr><td>1 k</td><td>0 (REF)</td></tr>
<tr><td>7 k</td><td>0 ±0.5</td></tr>
<tr><td>12 k</td><td>0 ±0.5</td></tr>
</table>

If the correction values exceed the specifications, perform step 2.

</td><td></td></tr>
<tr><td>

Step 2
Perform the following when the specification is not met.
- Connect the audio level meter to TP100 on the CUE-1 board.
- Record the 7 kHz and 12 kHz (–16 dBu) signals.
- The values of the level meter at this time are referred to as "value-2(7) and (12)".

</td><td>

TP100/CUE-1(E-3)

specification(7) ="value-2(7)"–"correction value (7)"

specification(12) ="value-2(12)"–"correction value(12)"

Adjust the level of TP100 to each specification for each frequency, and check step 1 again.

</td><td>

7 kHz: ⊘RV103/CUE-1(E-3)
12 kHz: ⊘LV102/CUE-1(C-2)

</td></tr>
</table>

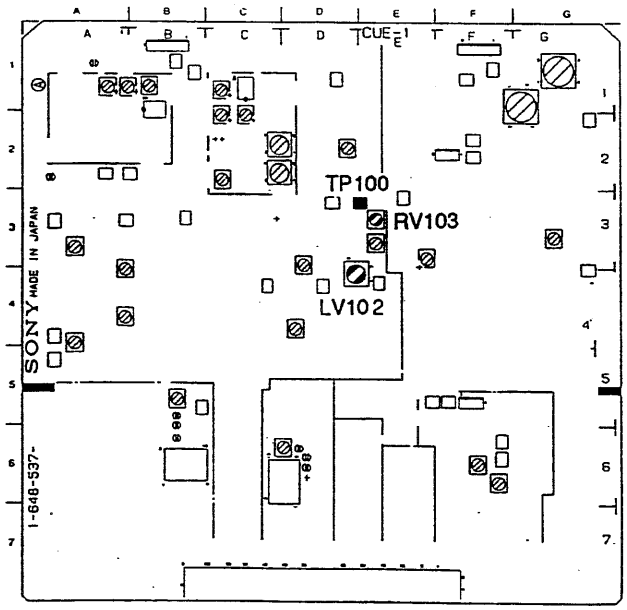

8-7-13. Cue OA Level Check

Preparations for adjustment	Specifications	Adjustments
Step 1 • Supply the 1 kHz, +4.0 dBu signal (terminated by 600 Ω) to AUDIO INPUT CUE on the connector panel. • Insert a digital tape, and set to REC mode. • Play back the recorded portion.	ANALOG AUDIO OUTPUT CUE +4.0 ±0.2 dBu(terminated by 600 Ω)	⊘RV100/CUE-1(E-3)

8-7-14. Cue OA Level Distortion Check

Preparations for adjustment	Specifications	Adjustments
• Supply the 1 kHz, +4.0 dBu (terminated by 600 Ω) signal to AUDIO INPUT CUE on the connector panel. • Insert a digital tape, and set to REC mode. • Play back the recorded portion.	ANALOG AUDIO OUTPUT CUE 2% or less	Check

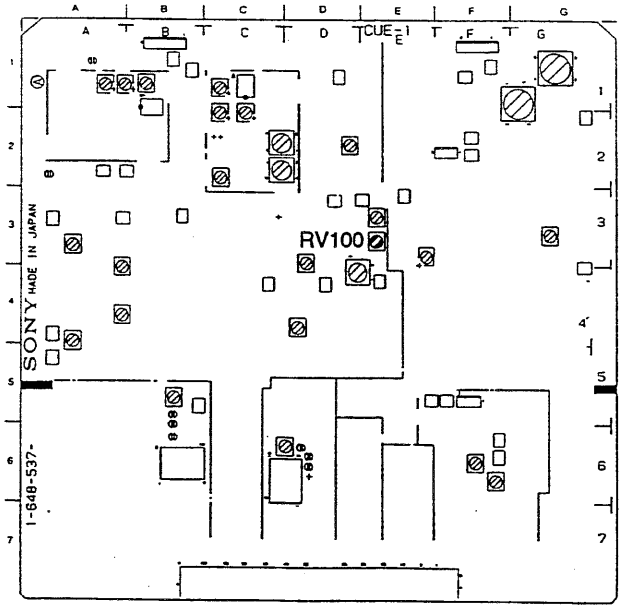

8-7-15. LTC PB Level Check

Preparations for adjustment	Specifications	Adjustments
Step 1 • Connect the oscilloscope to TP402(X) and E400(G) on the CUE-1 board. • Play back the alignment tape ZR5-1P (any portion is acceptable).	TP402/CUE-1 (F-6) 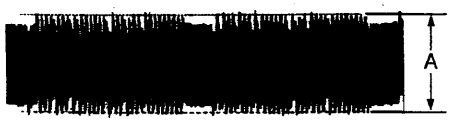 A ≧ 80 mV p-p	check
Step 2 a) REW b) REV shuttle X 5 c) REV shuttle X 1/5 Play back at upper speed.	TP402/CUE-1 (F-6) A ≧ 80 mV p-p	check If the specification is not met, clean the head. Nevertheless the specification is not met, perform section 8-4-10. Audio Level Adjustment again. Then, check from section 8-7-1. Audio PB Frequency Response Adjustment again.

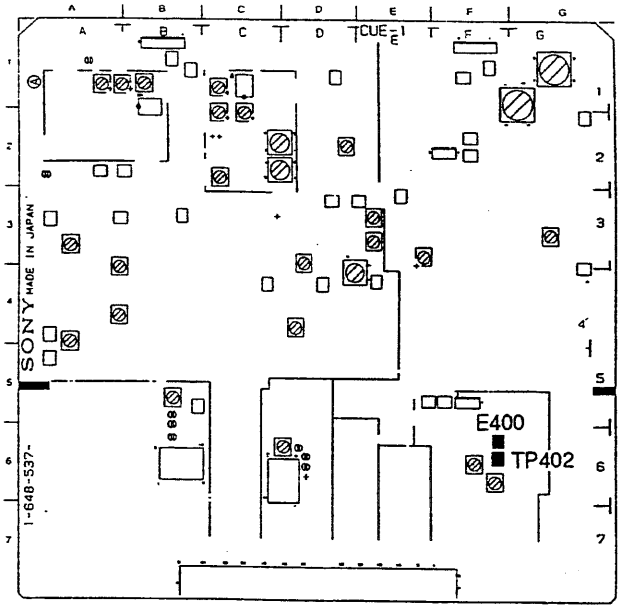

8-7-16. LTC OA Check

Preparations for adjustment	Specifications	Adjustments
Step 1 • Connect LTC OUT of the BVG-1600PS to TIME CODE IN on the connector panel. • Connect the oscilloscope to TP400(X) and TP401(G) on the CUE-1 board. • Insert a digital tape, and set to REC mode.	TP401/CUE-1(E-5) 60 ±5 mV p-p	Check
Step 2 • Connect BVG-1500PS to TIME CODE OUT on the connector panel. • Play back the recorded portion at step 1.	TIME CODE OUT Waveform can be observed by the BVG-1500PS.	Check
Step 3 • Connect the oscilloscope to TP402(X) and E400(G) on the CUE-1 board. • Play back the recorded portion at step 1 in the four modes which described below. A) PLAY B) REW C) REV SHUTTLE×5 D) REV SHUTTLE×1/5	TP402/CUE-1 (F-6) 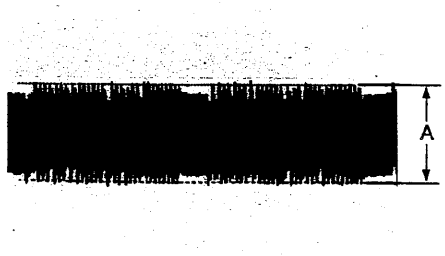 A ≧ 80 mV p-p	Check

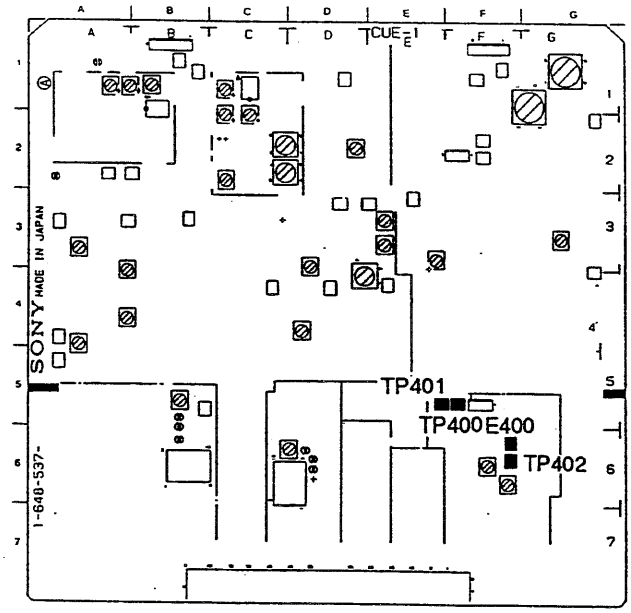

8-7-17. TC Insert Crosstalk Adjustment

Preparations for adjustment	Specifications	Adjustments
Step 1 • Supply no signal to AUDIO INPUT CUE on the connector panel. • Insert a digital tape, and set to REC mode. • Rewind the recorded portion. • Press the INSERT TIME CODE button. • Press the EDIT button and PLAY button simultaneously.	ANALOG AUDIO OUTPUT CUE Minimize the level. (The level should be less than –18 dBu) (30 kHz LPF) Adjust alternately to meet the specification and to be minimum level.	⊘RV400/CUE-1(F-6) ⊘RV401/CUE-1(F-6)

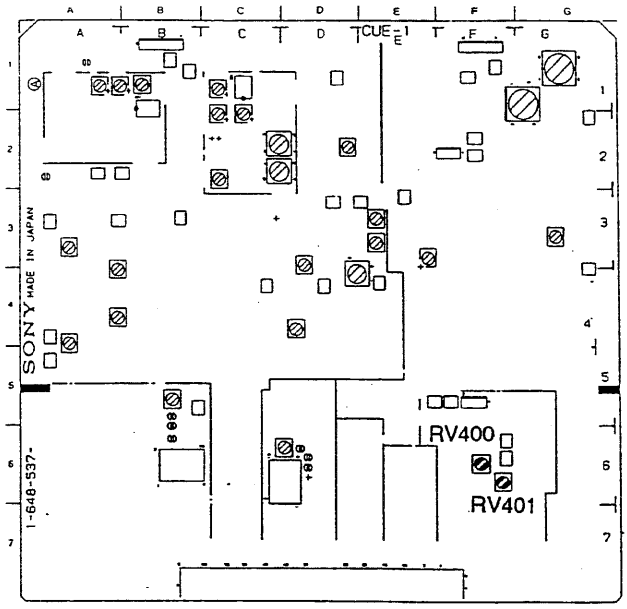

8-7-18. Cue Erasure Ratio Check

Preparations for adjustment	Specifications	Adjustments
Step 1 • Supply the 1 kHz, +13.5 dBu signal (terminated by 600 Ω) to ANALOG AUDIO INPUT CUE on the rear panel. • Insert a digital tape, and set to REC mode. • Rewind half of the recorded portion. • Supply no signal to ANALOG AUDIO INPUT CUE. • Press the INSERT CUE button, then press the EDIT and PLAY buttons simultaneously. • Play back the recorded portion. • Measure the level of ANALOG AUDIO OUTPUT CUE through BPF(1 kHz).	ANALOG AUDIO OUTPUT CUE Difference of the level of signal portion and no signal portion. more than 65 dB	Check (1) If the specification is not met, clean the head. (2) If the specification is not met after performing (1), perform section 8-4-8. Audio/TC Head Head-to-Tape Contact Adjustment again. Then, check from section 8-7-1.Audio PB Frequency Response Adjustment again.

SECTION 9
SPARE PARTS

9-1. NOTES ON SPARE PARTS

1. **Safety Related Components Warning**
   Components marked ⚠ are critical to safe operation. Therefore, specified parts should be used in the case of replacement.

2. **Standardization of Parts**
   Some repair parts supplied by Sony differ from those used for the unit. These are because of parts commonality and improvement.
   Parts list has the present standardized repair parts.

3. **Stock of Parts**
   Parts marked with "o" at SP(Supply Code) column of the spare parts list may be not stocked. Therefore, the delivery date will be delayed.

4. **Tension Spring**
   (xxT) after a tension spring is shown on the parts list in order to indicate the number of spring turns required for the use.
   (Example) TENSION, SPRING (20T):
   This spring must be cut at its 20th turn for actual use.

5. **Refer to the Installation and Maintenance Manual for parts exclusive to the DVW-A500/1, 500/1, A500P/1, 500P/1 and the BKDW-515.**

9-2. SPARE PARTS LIST – VTR –
9-2. 補修部品リスト – 本体 –

9-2-1. Index
9-2-1. インデックス

Mark	Item	Title	Page
①	S Reel Table	REEL CHASSIS (S SIDE) BLOCK	9-4
②	RS Table (S)		
③	Reel Shift		
④	T Reel Table	REEL CHASSIS (T SIDE) BLOCK	9-6
⑤	RS Table (T)		
⑥	Head Drum	DRUM AND ROTARY HEAD CLEANER BLOCK	9-8
⑦	Rotary Head Cleaner		
⑧	Tension Regulator	S TENSION REGULATOR BLOCK	9-10
⑨	CTL Head	CTL AND FE HEAD BLOCK	9-12
⑩	FE Head		
⑫	MR Sensor (left)		
⑬	MR Sensor (right)		
⑭	Threading Ring	THREADING RING AND PINCH ROLLER BLOCK	9-14
⑮	Pinch Roller		
⑯	AT Head Cleaner		
⑰	AT Head	AT HEAD AND CAPSTAN MOTOR BLOCK	9-16
⑱	Capstan Motor		
⑲	Tape Cleaner		
⑳	Pinch Press	PINCH PRESS AND GEAR BOX BLOCK	9-18
㉑	Gear Box Motor		
㉒	T Tension Regulator	T TENSION REGULATOR BLOCK	9-20
㉓	Cassette Compartment	CASSETTE COMPARTMENT BLOCK	9-22
㉔	Printed Circuit Board	PRINTED CIRCUIT BOARD (BOTTOM SIDE) BLOCK	9-24
㉕	Upper Lid	ORNAMENTAL PANEL BLOCK	9-26
	Bottom Panel		
	Cabinet (right)		
	Cabinet (left)		
㉖	Upper Control Panel	UPPER CONTROL PANEL BLOCK	9-28
㉗	Lower Control Panel	LOWER CONTROL PANEL BLOCK	9-30
㉘	Sub Control Panel	SUB CONTROL PANEL BLOCK	9-32
㉙	Connector Panel	CONNECTOR PANEL BLOCK	9-34
㉚	Power Block		
㉛	Cassette Compartment Stay	CHASSIS BLOCK	9-36
㉜	Mounted Circuit Board	MOUNTED CIRCUIT BOARD BLOCK	9-38

OVERALL BLOCK

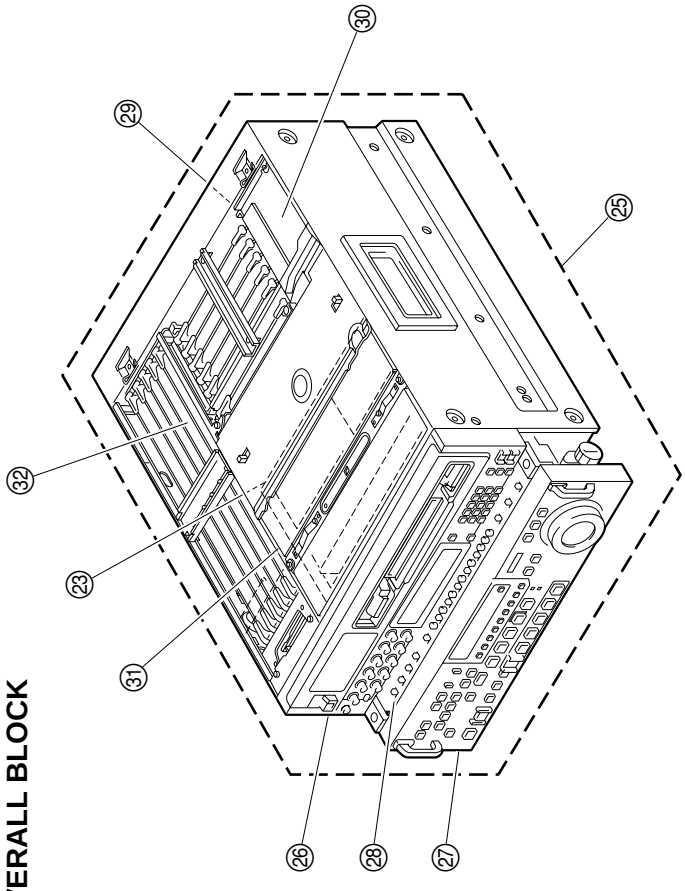

MECHANICAL DECK (TOP VIEW)

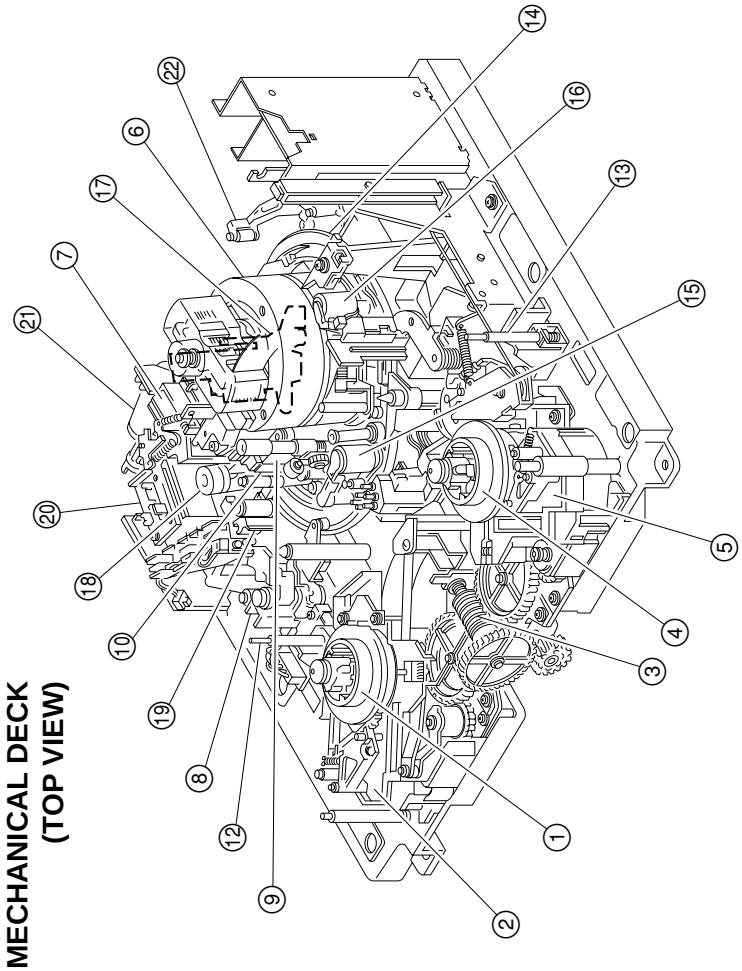

MECHANICAL DECK (BOTTOM VIEW)

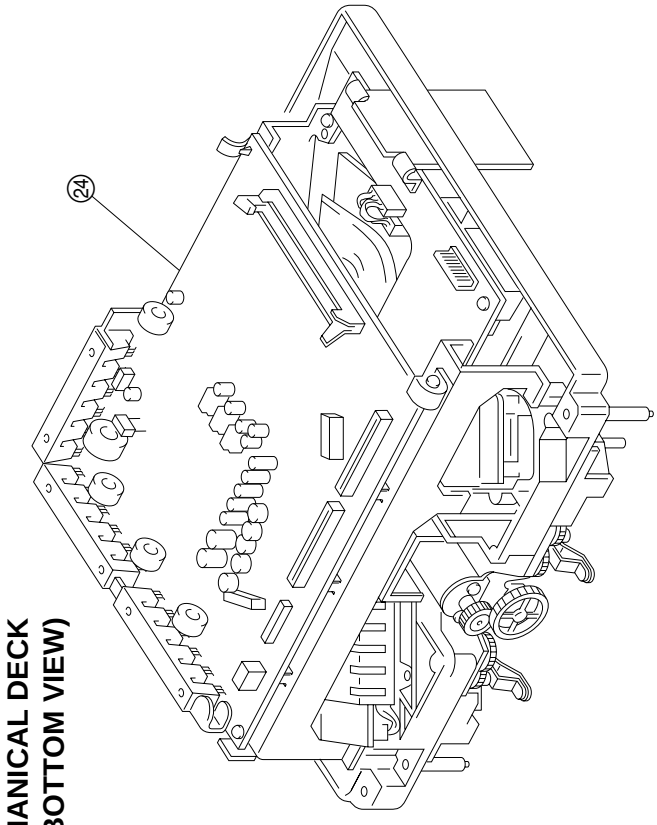

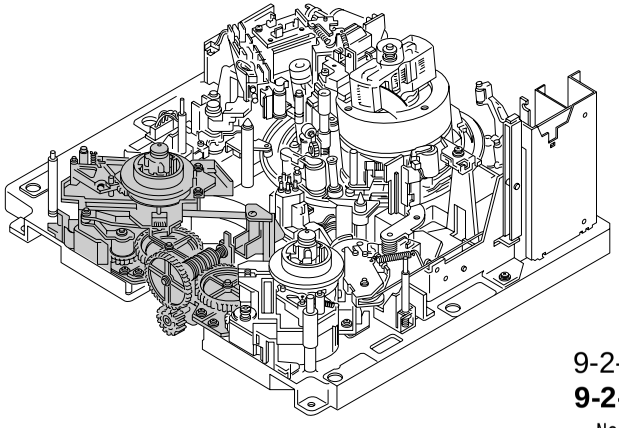

9-2-2. Exploded Views and Mechanical Parts List

9-2-2. 分解図および機構部品リスト

No.	Part No.	SP	Description
1	A-8267-774-E	s	RM ASSY
2	A-6741-066-B	o	BRAKE ASSY
*A 3	A-8267-701-C	s	FG ASSY, REEL
*B	A-8278-310-A	s	FG ASSY, REEL
4	A-8267-703-J	s	TABLE (S) BLOCK ASSY, RS
5	A-8276-619-A	o	MOUNTED CIRCUIT BOARD, PTC-71
6	X-3166-024-1	o	ARM (A) ASSY, CRANK
7	X-3678-560-4	s	TABLE ASSY, REEL
8	X-3166-060-1	o	ARM (B) ASSY, CRANK
*A 9	X-3167-047-1	o	BASE ASSY, REEL SHIFT
10	X-3717-205-1	s	LINING ASSY
11	1-454-417-31	s	SOLENOID, PLUNGER
12	1-648-570-11	o	PRINTED CIRCUIT BOARD, CCM-15
13	1-698-152-11	s	MOTOR (SVD-1449), DC
14	1-807-683-11	s	RESISTOR ELEMENT
*A15	2-279-715-01	s	RIVET, NYLON
16	2-280-622-51	o	SUPPORT (M3), HEXAGON
17	3-171-430-01	o	GEAR, CRANK
18	3-171-316-01	s	GEAR, M
*A19	3-171-318-01	o	BEARING, WORM
*A20	3-171-319-01	o	SHAFT, WORM
*A21	3-171-320-01	o	GEAR, DRIVE
*B	3-603-393-01	o	GEAR, SHIFT
22	3-171-397-02	o	HOLDER (S), SHAFT
23	3-171-429-01	o	GEAR, LS
24	3-171-431-01	s	SHAFT, SLIDE
25	3-180-687-01	o	HOLDER (A), SHAFT
26	3-180-866-01	o	BASE, LS SENSOR
27	3-307-381-00	s	SPRING, TENSION
28	3-491-247-00	s	SPRING, COMPRESSION
29	3-535-532-01	s	SPRING, TENSION
30	3-648-217-00	o	SPRING, TENSION
31	3-659-324-00	s	SPRING, COMPRESSION
32	3-669-596-01	s	WASHER (2.3), STOPPER
33	3-701-441-01	s	WASHER, POLY 4mm DIA., 0.13T
34	3-701-441-11	s	WASHER, POLY 4mm DIA., 0.25T
35	3-701-441-21	s	WASHER, POLY 4mm DIA., 0.50T
36	3-701-506-01	s	SET SCREW, DOUBLE POINT 3x4
37	3-701-507-00	s	SET SCREW, DOUBLE POINT M3x5
*A38	3-717-210-01	s	WORM
*A39	3-717-212-01	o	WASHER (B), WORM
*A40	3-717-213-01	o	WASHER (A), WORM
41	3-717-224-01	s	WASHER (B), WORM
42	3-717-230-01	o	BRACKET, LIMITER
43	3-717-231-01	o	HOLDER, LIMITER
44	3-717-266-01	o	CAP (S), CG SHAFT
45	3-717-398-01	o	TABLE, SLIDE
46	3-717-399-01	s	WHEEL, W
47	3-717-450-02	o	ARM, BRAKE RELEASE
48	3-717-625-01	s	SPACER
*A49	3-729-013-01	s	SCREW (P1.4x1.6), WASHER-HEAD
50	8-719-939-05	s	PHOTO INTERRUPTER GP1S54
52	3-188-108-01	s	WASHER, POLY 4mm DIA., 0.05T

*A for S/N 10001 thru. 14862: DVW-A500P(EK)
for S/N 10001 thru. 13225: DVW-500P(EK)

*B for S/N 14863 and higher : DVW-A500P(EK)
for S/N 13226 and higher : DVW-500P(EK)

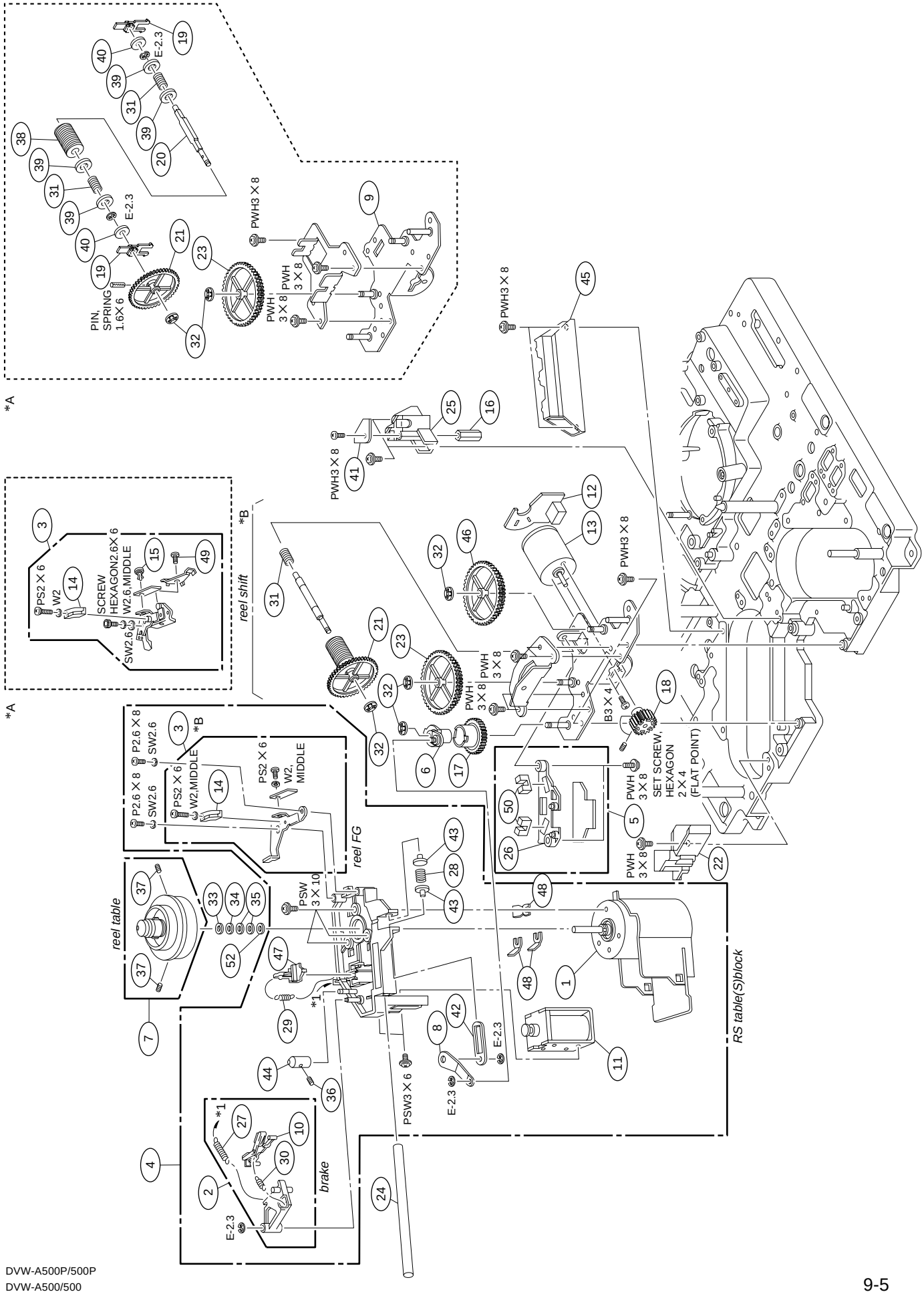
*A
*B
*1
reel shift
reel FG
reel table
brake
RS table(S)block
PIN, SPRING 1.6X 6
E-2.3
PWH3 X 8
PWH 3 X 8
PS2 X 6
W2
SCREW HEXAGON2.6X 6
W2,MIDDLE
SW2.6
P2.6 X 8
PSW 3 X 10
PSW3 X 6
B3 X 4
SET SCREW, HEXAGON 2 X 4 (FLAT POINT)

REEL CHASSIS (T SIDE) BLOCK

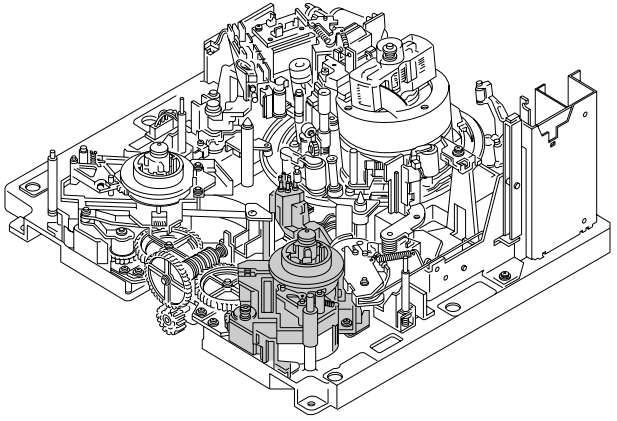

No.	Part No.	SP	Description
101	A-8267-774-E	s	RM ASSY
102	A-6741-066-B	o	BRAKE ASSY
103	A-8267-549-B	o	SENSOR ASSY, MC
*A 104	A-8267-701-C	s	FG ASSY, REEL
*B	A-8278-310-A	s	FG ASSY, REEL
105	A-8267-702-H	s	TABLE (T) BLOCK ASSY, RS
106	X-3166-024-1	o	ARM (A) ASSY, CRANK
107	X-3678-560-4	s	TABLE ASSY, REEL
108	X-3166-060-1	o	ARM (B) ASSY, CRANK
109	X-3717-205-1	s	LINING ASSY
110	1-454-417-31	s	SOLENOID, PLUNGER
*A 111	1-807-683-11	s	RESISTOR ELEMENT
*B	1-801-300-11	s	RESISTOR ELEMENT, MAGNETIC
*A 112	2-279-715-01	s	RIVET, NYLON
114	3-171-428-02	o	HOLDER (T), SHAFT
115	3-171-430-01	o	GEAR, CRANK
116	3-171-431-01	s	SHAFT, SLIDE
117	3-180-756-01	o	CAP, MC
118	3-180-757-01	o	PIN (1), MC
119	3-180-758-01	o	PIN (2), MC
120	3-180-759-01	o	HOLDER, MC
121	3-307-381-00	s	SPRING, TENSION
122	3-491-247-00	s	SPRING, COMPRESSION
123	3-554-202-00	o	SPRING, COMPRESSION
124	3-535-532-01	s	SPRING, TENSION

No.	Part No.	SP	Description
125	3-648-217-00	o	SPRING, TENSION
126	3-669-596-01	s	WASHER (2.3), STOPPER
127	3-701-441-01	s	WASHER, POLY 4mm DIA., 0.13T
128	3-701-506-01	s	SET SCREW, DOUBLE POINT 3x4
129	3-701-507-00	s	SET SCREW, DOUBLE POINT M3x5
130	3-717-230-01	o	BRACKET, LIMITER
131	3-717-231-01	o	HOLDER, LIMITER
132	3-717-266-01	o	CAP (S), CG SHAFT
133	3-717-398-01	o	TABLE, SLIDE
134	3-717-450-02	o	ARM, BRAKE RELEASE
135	3-717-625-01	s	SPACER
*A 136	3-729-013-01	s	SCREW (P1.4x1.6), WASHER-HEAD
138	3-701-441-21	s	WASHER, POLY 4mm DIA., 0.50T
139	3-188-108-01	s	WASHER, POLY 4mm DIA., 0.05T
*C 140	3-717-222-01	s	CAP(L), CS SHAFT

*A for S/N 10001 thru. 14862: DVW-A500P(EK)
for S/N 10001 thru. 13225: DVW-500P(EK)

*B for S/N 14863 and higher : DVW-A500P(EK)
for S/N 13226 and higher : DVW-500P(EK)

*C for S/N 17638 and higher : DVW-A500P(CE)
for S/N 14881 and higher : DVW-500P(CE)

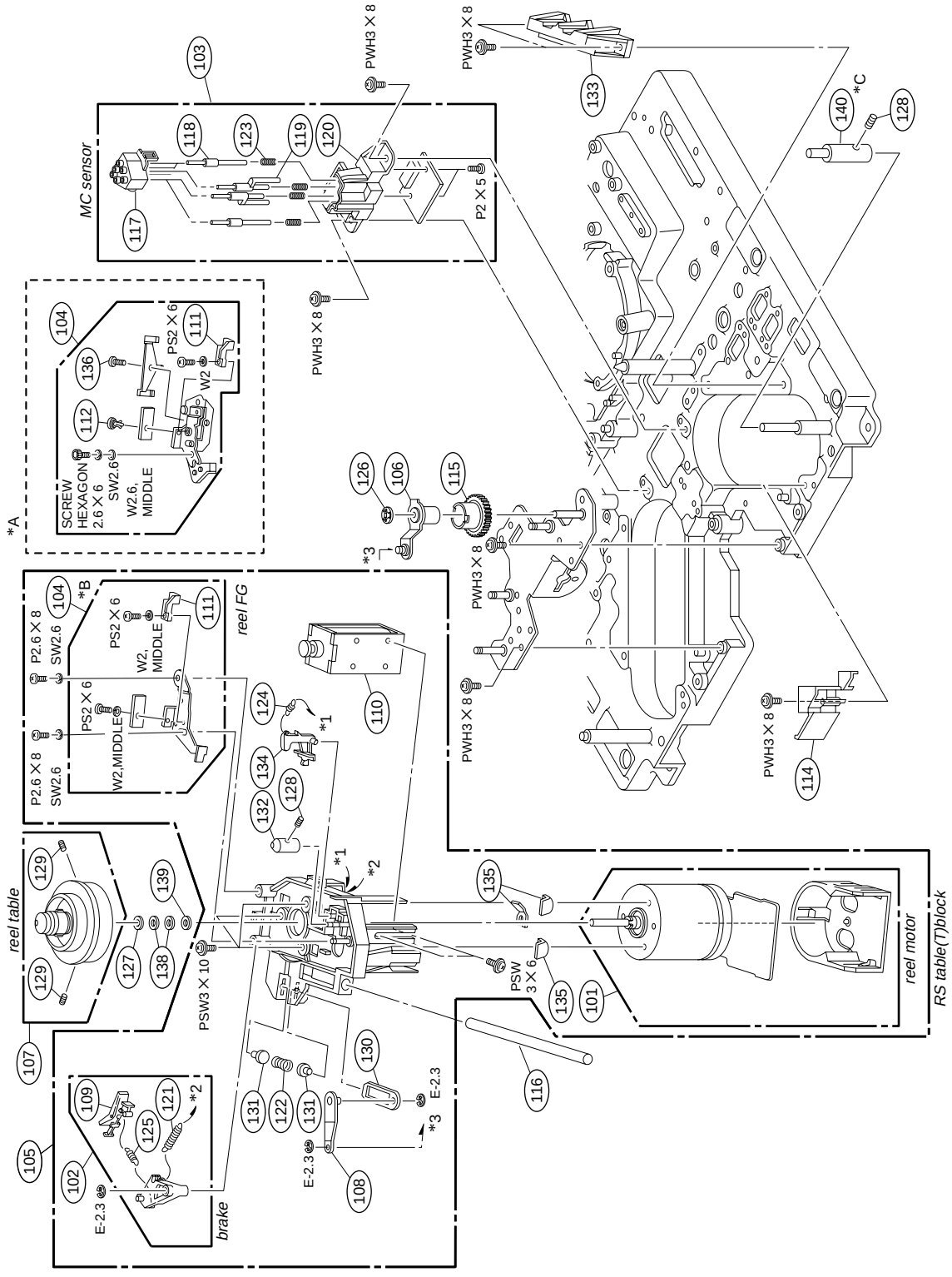
MC sensor
103
118
123
119
120
117
PWH3 X 8
P2 X 5
PWH3 X 8
PWH3 X 8
133
140
*C
128
*A
104
136
112
PS2 X 6
111
W2
SCREW
HEXAGON
2.6 X 6
SW2.6
W2.6,
MIDDLE
126
106
115
*3
PWH3 X 8
PWH3 X 8
PWH3 X 8
114
*B
104
P2.6 X 8
SW2.6
PS2 X 6
W2,
MIDDLE
111
reel FG
P2.6 X 8
SW2.6
PS2 X 6
W2,MIDDLE
124
*1
110
134
128
132
*1
*2
135
reel table
129
129
127
138
139
PSW3 X 10
PSW
3 X 6
135
101
reel motor
RS table(T)block
107
130
E-2.3
116
105
109
121
*2
125
102
E-2.3
131
122
131
*3
E-2.3
108
brake

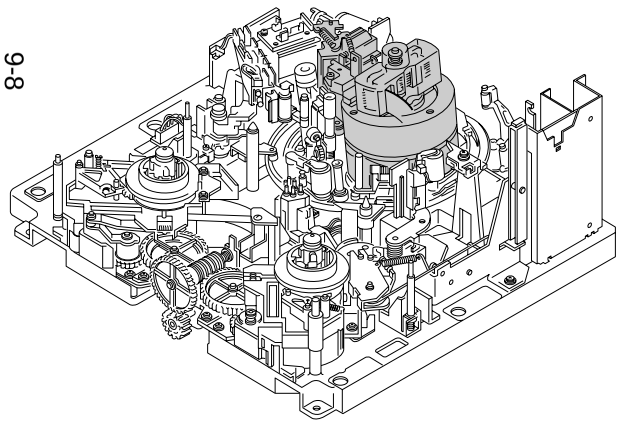

No.	Part No.	SP	Description
201	A-8260-687-C	s	INNER DRUM ASSY, DJR-02A-R (for DVW-A500P)
	A-8260-689-C	s	INNER DRUM ASSY, DJR-04A-R (for DVW-500P)
202	A-8260-691-D	s	DRUM ASSY, DJH-02A-R (for DVW-A500P)
	A-8260-693-D	s	DRUM ASSY, DJH-04A-R (for DVW-500P)
203	A-8267-391-D	s	COVER ASSY, DRUM, UPPER
*A 204	A-8267-398-H	s	CLEANER ASSY, VIDEO HEAD
*B	A-8320-545-A	s	CLEANER (B) ASSY, VIDEO HEAD
205	A-8267-571-A	s	SR13 ASSY (RP), BRUSH (for DVW-A500P)
	A-8267-572-A	s	SR9 ASSY (RP), BRUSH (for DVW-500P)
206	X-3167-280-3	s	CLEANER SUB ASSY, VIDEO (for S/N 11696 and higher: DVW-A500P(EK)) (for S/N 10031 and higher: DVW-A500P(UC)) (for S/N 10861 and higher: DVW-500P)
	X-3167-280-2	s	CLEANER SUB ASSY, VIDEO (for S/N 10001 thru. 11695: DVW-A500P(EK)) (for S/N 10001 thru. 10030: DVW-A500P(UC)) (for S/N 10001 thru. 10860: DVW-500P)
207	X-3167-045-3	o	BASE ASSY, V CLEANER
208	1-454-607-11	s	SOLENOID, PLUNGER
209	3-180-112-03	s	BRACKET, TAPE
210	3-180-163-01	s	SCREW (2x16)
211	3-180-164-01	s	SPRING, FITTING, UD
213	3-180-729-02	o	LEVER, V CLEANER (for S/N 11696 and higher: DVW-A500P(EK)) (for S/N 10031 and higher: DVW-A500P(UC)) (for S/N 10861 and higher: DVW-500P)
	3-180-729-01	o	LEVER, V CLEANER (for S/N 10001 thru. 11695: DVW-A500P(EK)) (for S/N 10001 thru. 10030: DVW-A500P(UC)) (for S/N 10001 thru. 10860: DVW-500P)
214	3-180-730-01	o	PLATE, STOPPER (for S/N 10001 thru. 11695: DVW-A500P(EK)) (for S/N 10001 thru. 10030: DVW-A500P(UC)) (for S/N 10001 thru. 10860: DVW-500P)
215	3-307-378-00	s	SPRING, TENSION
216	3-642-490-00	s	SPRING, TENSION
217	3-703-074-01	s	CAP 3, SHAFT
218	3-899-249-11	s	BOLT, HEXAGON SOCKET
219	3-182-488-02	s	SCREW, FITTING, UD
221	3-182-648-02	s	CAP
222	3-182-649-01	s	FILTER
223	3-183-901-01	s	WASHER, CL
224	3-183-902-01	o	STOPPER, CL (for S/N 10001 thru. 11695: DVW-A500P(EK)) (for S/N 10001 thru. 10030: DVW-A500P(UC)) (for S/N 10001 thru. 10860: DVW-500P)
225	3-183-903-01	o	CASE, VH SHIELD
226	A-8314-518-A	s	HEAD ASSY, DEMAGNETIZATION
227	3-671-150-01	o	CLAMP
228	X-3167-281-2	s	ROLLER ASSY, V CLEANING
229	3-182-765-02	s	SPACER, CR
230	3-190-056-01	s	LABEL, HOURS
*B 231	A-8320-546-A	s	ROLLER (B) ASSY (RP), V CLEANING
*B 232	3-615-958-01	s	LABEL 5, SELF

*A for S/N 10001 thru. 18367: DVW-A500P(EK)
for S/N 10001 thru. 10238: DVW-A500P(UC)
for S/N 10001 thru. 15190: DVW-500P(EK)
for S/N 10001 thru. 10160: DVW-500P(UC)

*B for S/N 18368 and higher: DVW-A500P(EK)
for S/N 10239 and higher: DVW-A500P(UC)
for S/N 15191 and higher: DVW-500P(EK)
for S/N 10161 and higher: DVW-500P(UC)

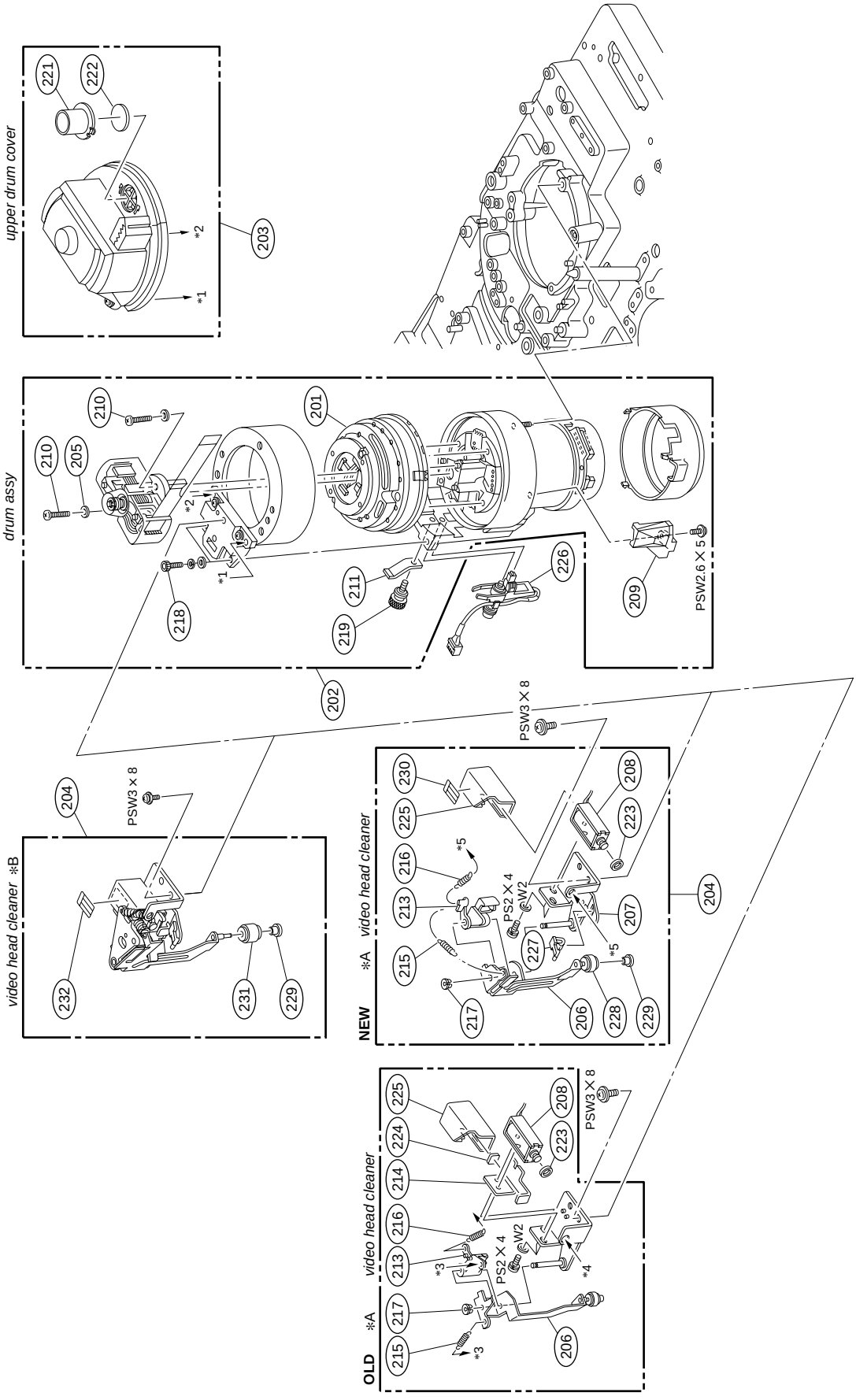
upper drum cover
221
222
203
*1
*2
drum assy
210
205
201
211
219
218
226
209
202
PSW2.6 × 5
PSW3 × 8
video head cleaner ⁎B
204
232
231
229
NEW
⁎A
video head cleaner
230
225
216
213
215
217
227
207
206
228
229
208
223
204
PS2 × 4
W2
*5
OLD
⁎A
video head cleaner
215
217
213
216
214
224
225
208
223
206
*3
*4
PS2 × 4
W2
PSW3 × 8

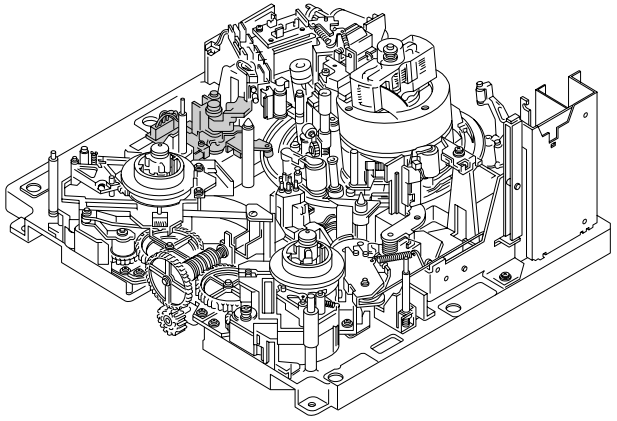

No.	Part No.	SP	Description
301	A-8267-795-E	s	TENSION REGULATOR ASSY (RP)

Sテンションレギュレータ ASSYの構成部品の交換は、厳密な調整を必要とするため、組立品で交換してください。

If the component parts of the S tension regulator assembly are needed to replace, replace as a whole assembled parts instead of as a component part because of the strict adjustment is required.

302	X-3608-153-1	o	PLATE (S) ASSY
303	3-701-506-01	s	SET SCREW, DOUBLE POINT 3x4
304	A-8326-006-A	s	L CASSETTE HOLDER (RP) KIT

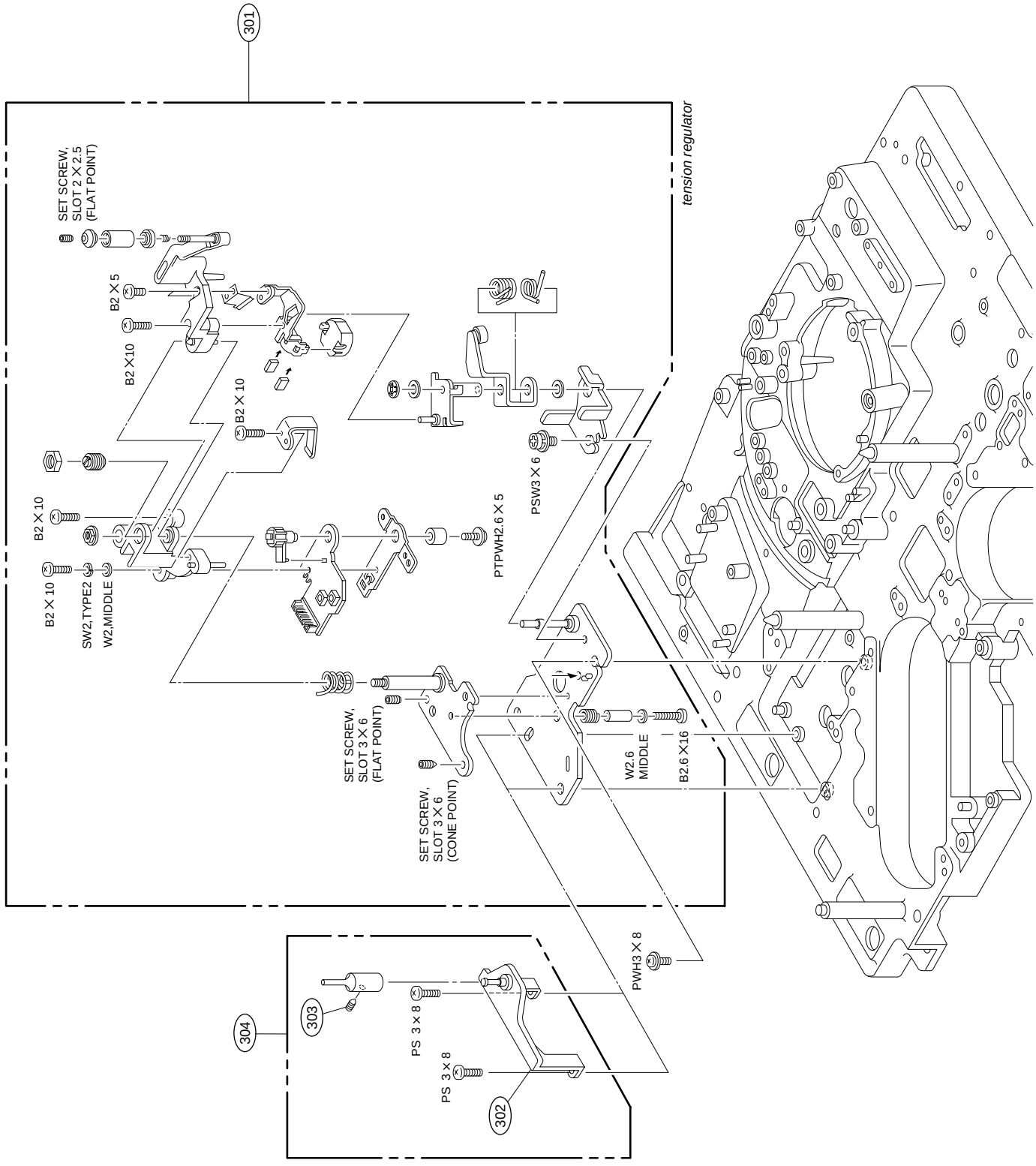
301
tension regulator
SET SCREW,
SLOT 2 X 2.5
(FLAT POINT)
B2 X 5
B2 X10
B2 X 10
B2 X 10
B2 X 10
SW2,TYPE2
W2,MIDDLE
PSW3 X 6
PTPWH2.6 X 5
SET SCREW,
SLOT 3 X 6
(FLAT POINT)
SET SCREW,
SLOT 3 X 6
(CONE POINT)
W2.6
MIDDLE
B2.6 X16
PWH3 X 8
303
304
PS 3 x 8
PS 3 x 8
302

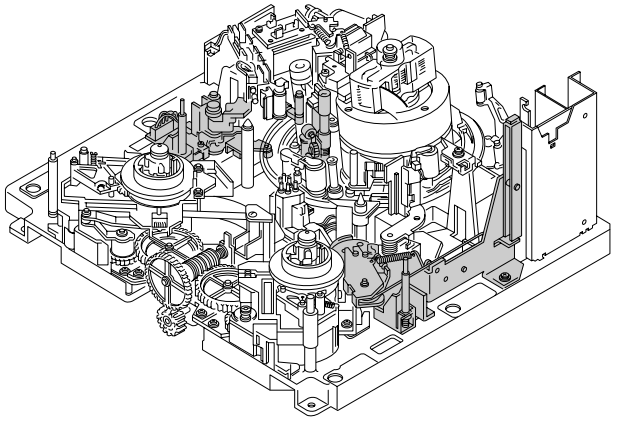

No.	Part No.	SP	Description
401	A-8267-392-A	o	SENSOR ASSY, MR
403	A-8267-554-B	s	TG-2 ASSY
404	X-3167-044-3	o	BASE ASSY, CTL/FE (for S/N 12036 and higher: DVW-A500P(EK)) (for S/N 11288 and higher: DVW-A500(UC)) (for S/N 10421 and higher: DVW-A500(J)) (for S/N 11046 and higher: DVW-500P(EK)) (for S/N 11667 and higher: DVW-500(UC)) (for S/N 10061 and higher: DVW-500(J))
405	X-3167-056-1	s	ROLLER ASSY, GUIDE
408	2-203-519-21	s	NUT (A), LOCK, PIVOT
410	3-180-665-02	o	FLANGE (L), UPPER
411	3-180-725-01	s	SPRING, CTL/FE
412	3-180-726-02	o	BRACKET, CTL/FE (for S/N 12036 and higher: DVW-A500P(EK)) (for S/N 11288 and higher: DVW-A500(UC)) (for S/N 10421 and higher: DVW-A500(J)) (for S/N 11046 and higher: DVW-500P(EK)) (for S/N 11667 and higher: DVW-500(UC)) (for S/N 10061 and higher: DVW-500(J))

No.	Part No.	SP	Description
413	3-180-745-01	o	LEVER, MR
414	3-180-746-01	o	HOLDER, MR
417	3-181-489-01	s	FLANGE, DIA. 8
418	3-181-834-01	o	PULLEY, ME
419	3-181-839-01	o	WIRE, STAINLESS
420	3-563-104-00	s	SPRING, TENSION
421	3-657-842-11	o	SPACER (3x7)
422	3-661-588-01	s	SPACER (3x5)
423	3-701-788-XX	s	SPRING, TENSION (27T)
426	3-738-730-01	s	SPRING, COMPRESSION
428	4-869-230-00	s	SPRING, COMPRESSION
429	4-880-426-00	o	SPRING, COMPRESSION
431	8-825-554-84	s	HEAD, CTL PS244-21B
432	8-825-770-72	s	HEAD, FE EF291-21
433	X-3167-257-1	o	IDLER ASSY, ME
434	1-506-481-11	o	PIN, CONNECTOR 2P
435	1-564-013-11	o	PIN, CONNECTOR 3P
436	3-669-596-00	s	WASHER, 2.3
437	A-8267-411-B	o	HEAD ASSY, CTL/FE
438	3-740-546-31	s	SCREW (M2x12)

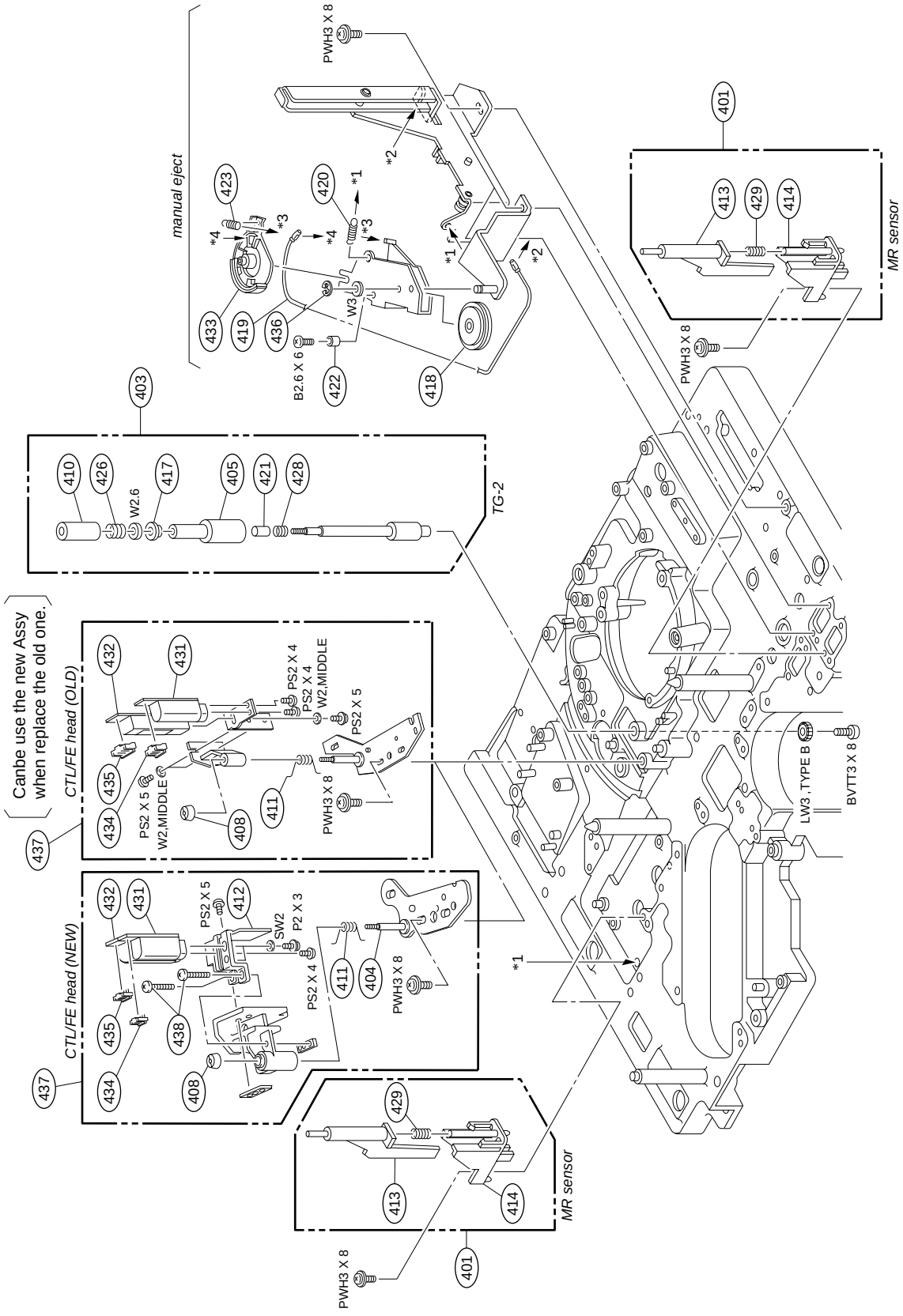
manual eject
PWH3 X 8
*2
*1
*3
*4
423
420
433
419
436
W3
B2.6 X 6
422
418
401
413
429
414
MR sensor
403
410
426
W2.6
417
405
421
428
TG-2
Canbe use the new Assy
when replace the old one.
437
CTL/FE head (OLD)
432
431
435
434
PS2 X 5
W2,MIDDLE
408
411
PS2 X 4
PS2 X 4
W2,MIDDLE
PS2 X 5
PWH3 X 8
CTL/FE head (NEW)
PS2 X 5
412
SW2
P2 X 3
PS2 X 4
438
404
LW3 ,TYPE B
BVTT3 X 8

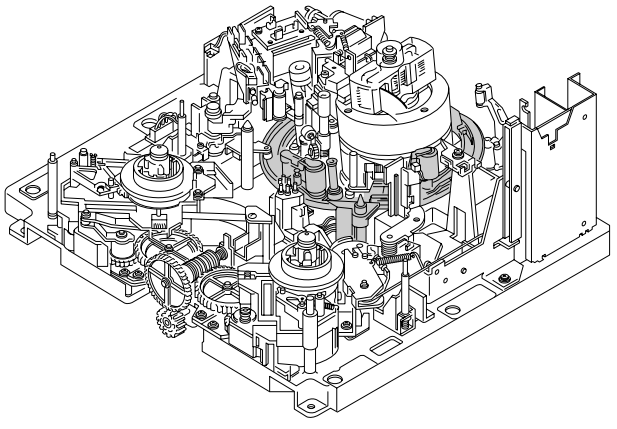

No.	Part No.	SP	Description
501	A-8267-395-H	s	RING ASSY, THREADING
502	X-3167-052-2	s	ROLLER ASSY, ONEBARE
503	X-3167-053-2	s	ARM ASSY, CL
504	X-3167-054-5	s	ARM ASSY, PINCH
505	3-180-676-01	s	SHAFT, (B) RING ROLLER
506	3-180-677-01	s	ROLLER, RING
507	3-180-678-01	s	SHAFT, RING ROLLER
508	3-180-679-01	s	ROLLER, (B) RING
509	3-180-681-01	s	ROLLER (C) RING
510	3-180-772-01	s	SPRING (RG), PLATE
511	3-629-781-01	s	FLANGE, ONEBARE USE
512	3-180-774-03	s	FLANGE, TG5 (UPPER)
513	3-180-849-01	s	SPRING (C), TORSION
514	3-180-850-01	s	ARM, LOCK
515	3-180-853-01	s	GUARD, PINCH ARM
516	3-180-874-02	s	RAIL, CL GUIDE
517	3-669-596-01	s	WASHER (2.3), STOPPER
518	3-676-327-01	s	SPRING, COMPRESSION
519	3-701-439-11	s	WASHER, POLY 3mm DIA., 0.25T
	3-701-439-01	s	WASHER, POLY 3mm DIA., 0.13T
520	3-714-587-01	o	SPRING, LEAF
521	3-739-736-02	o	BASE, SPRING
522	4-879-563-00	s	SPRING, COMPRESSION
523	3-701-439-21	s	WASHER, POLY 3mm DIA., 0.50T

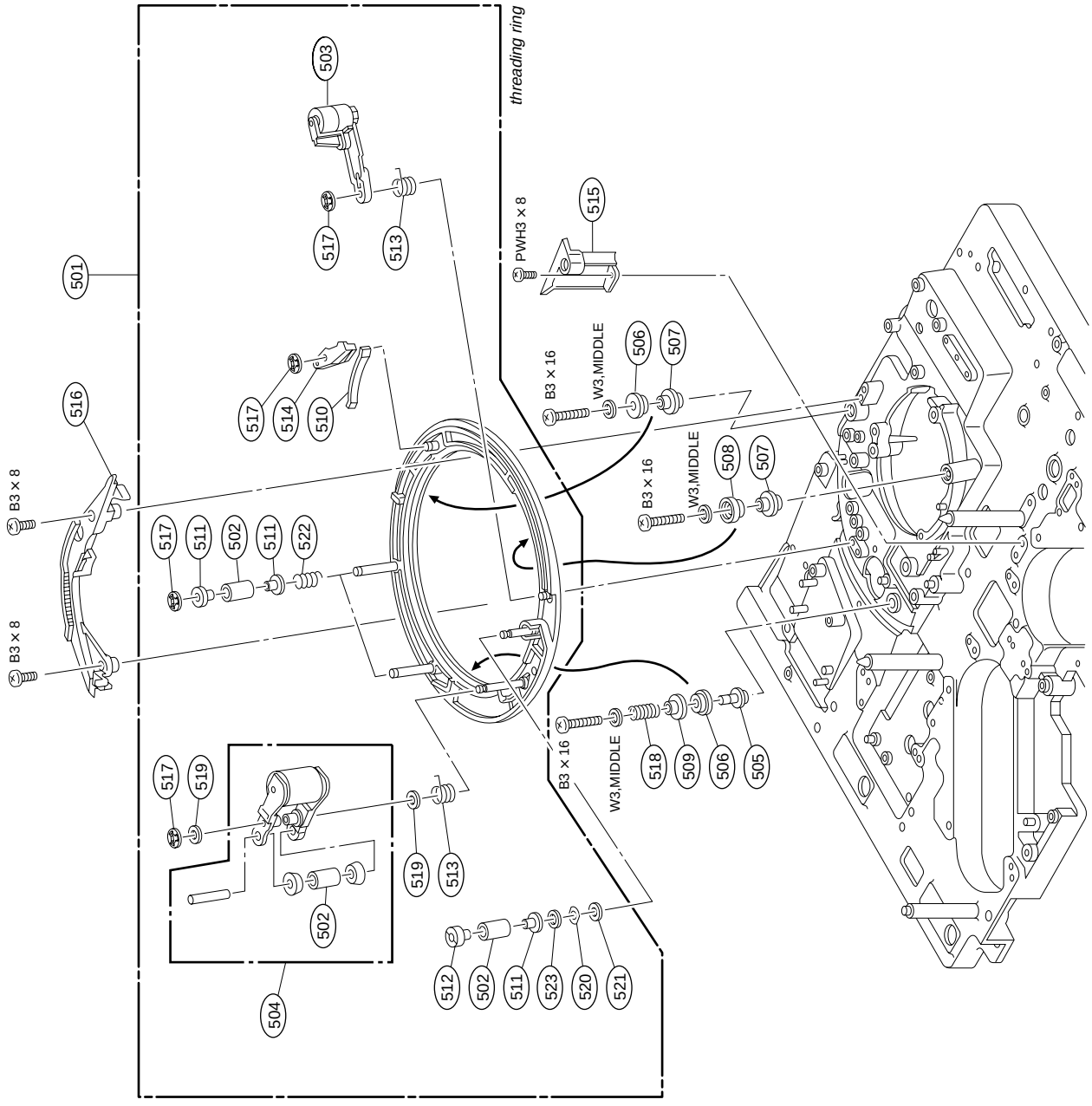
threading ring
503
517
513
501
PWH3 × 8
515
517
514
510
B3 × 16
W3,MIDDLE
506
507
516
B3 × 8
517
511
502
511
522
B3 × 16
W3,MIDDLE
508
507
B3 × 8
B3 × 16
W3,MIDDLE
518
509
506
505
517
519
519
513
502
504
512
502
511
523
520
521

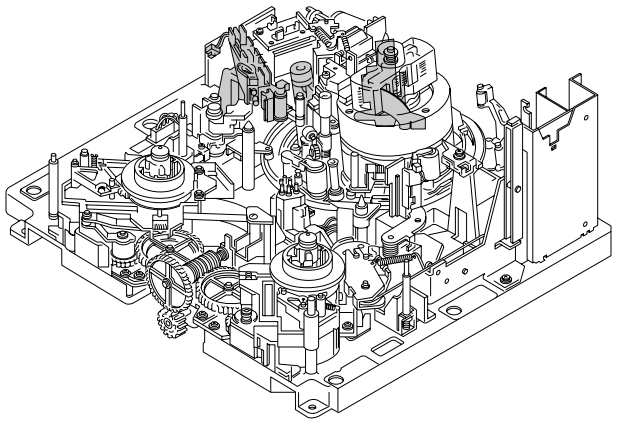

No.	Part No.	SP	Description
601	A-8267-394-C	s	TG-3 ASSY
602	A-8267-422-B	o	HEAD ASSY, AT
603	X-3167-049-3	s	GUIDE ASSY, TG-0
604	X-3167-057-1	o	PLATE, ADJUSTMENT ASSY, AT
605	X-3167-061-2	o	BRACKET ASSY, AT
606	X-3167-142-2	o	PLATE, SHIELD ASSY, AT
607	X-3167-203-4	o	CLEANER ASSY, TWIN TAPE
608	A-8325-389-A	s	MOTOR ASSY (RP), CAPSTAN
609	2-279-715-01	s	RIVET, NYLON
610	3-180-403-01	o	HOLDER, SENSOR
611	3-180-669-02	s	FLANGE, FIXED GUIDE USE
612	3-180-670-01	o	NUT, FIXED GUIDE ADJUSTMENT
613	3-180-826-01	o	GOOSENECK PLATE
614	3-180-829-04	o	CASE, SHIELD AT
615	3-181-489-01	s	FLANGE, DIA. 8
616	3-181-491-01	o	SLEEVE, DIA. 6
617	3-181-979-01	o	SPRING, COMPRESSION
618	3-181-980-01	o	SPACER, AT
619	3-738-730-01	s	SPRING, COMPRESSION
620	8-825-778-22	s	HEAD, AUDIO EPS244-2103G
621	1-543-316-31	s	HEAD, SENSING (SMALL TYPE)
622	3-180-869-04	s	PLATE, (S)
623	3-183-823-01	o	BRACKET, GUIDE RETAINER
624	3-669-316-01	s	SPRING, COMPRESSION

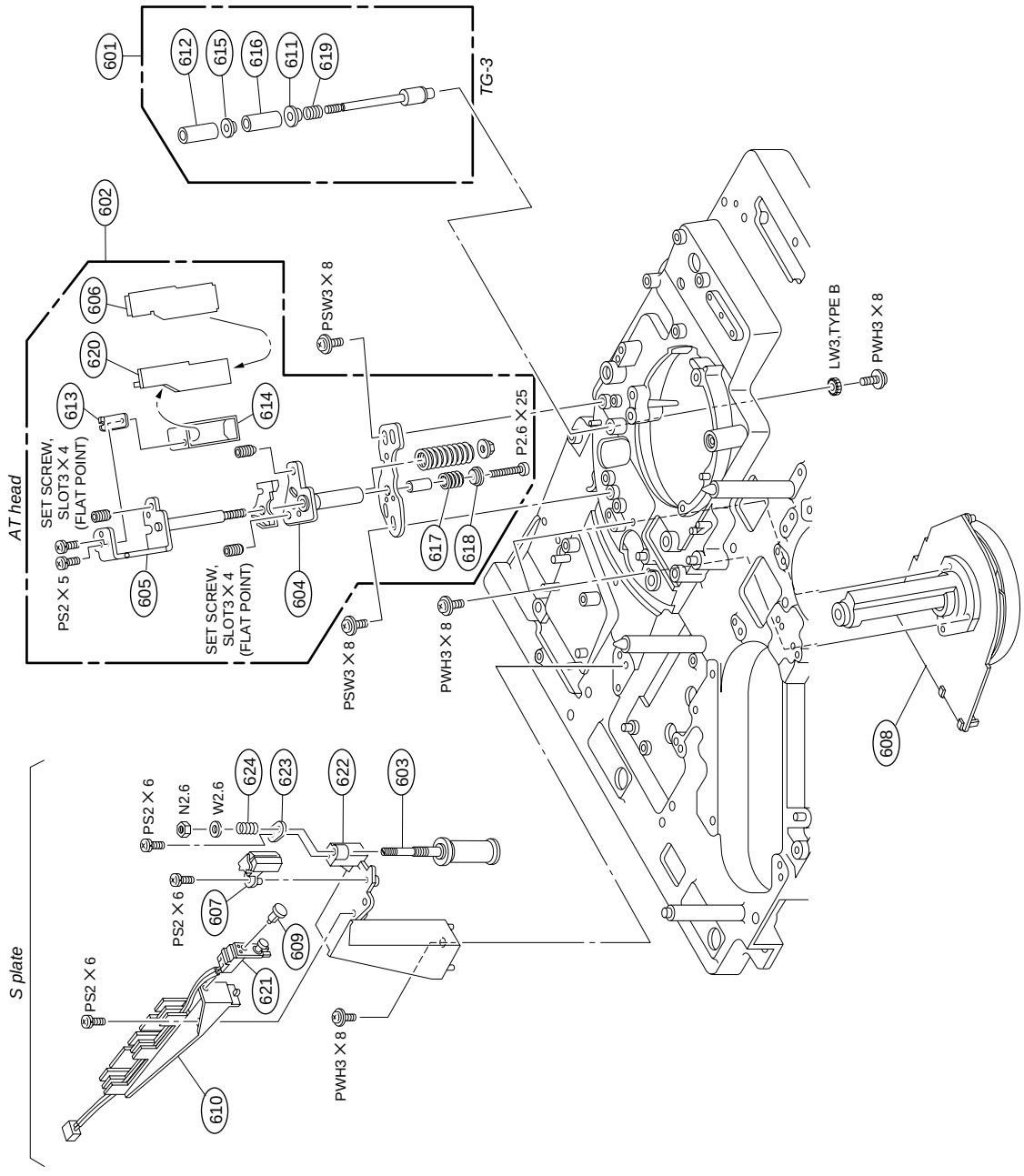
601
612
615
616
611
619
TG-3
602
606
620
613
614
AT head
SET SCREW,
SLOT3 X 4
(FLAT POINT)
PS2 X 5
605
SET SCREW,
SLOT3 X 4
(FLAT POINT)
604
PSW3 X 8
P2.6 X 25
617
618
PSW3 X 8
PWH3 X 8
LW3,TYPE B
PWH3 X 8
608
S plate
PS2 X 6
N2.6
W2.6
624
623
622
603
PS2 X 6
607
PS2 X 6
609
621
PWH3 X 8
610

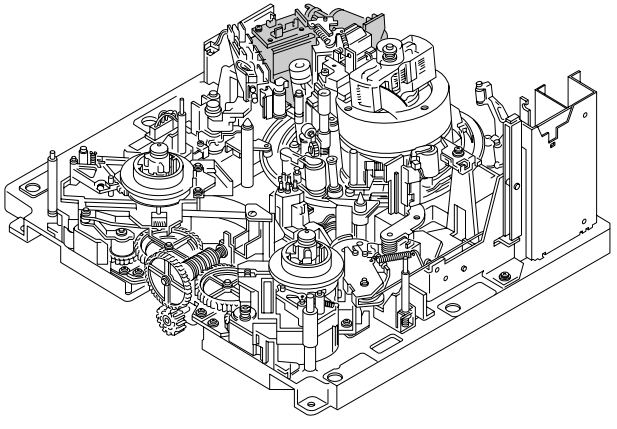

No.	Part No.	SP	Description
701	A-6749-117-C	o	PRESS ASSY, PINCH
702	A-8323-825-A	s	BOX ASSY (RP), GEAR
703	1-454-338-11	s	SOLENOID, PLUNGER
704	1-622-596-11	o	PRINTED CIRCUIT BOARD, PD-35
705	1-648-570-11	o	PRINTED CIRCUIT BOARD, CCM-15
706	1-698-152-11	s	MOTOR (SVD-1449), DC
707	3-180-717-01	s	GEAR, RING
708	3-180-718-01	s	GEAR, DRIVE
709	3-180-719-01	s	GEAR, WORM
710	3-180-720-01	o	GUARD, WORM
711	3-180-843-02	o	SHAFT, WORM
712	3-180-844-02	s	GEAR, (M)
713	3-180-845-01	s	GEAR, (B)
714	3-653-382-01	o	SPACER (4x25)
715	3-659-324-00	s	SPRING, COMPRESSION
716	3-669-596-01	s	WASHER (2.3), STOPPER
718	3-701-441-21	s	WASHER, POLY 4mm DIA., 0.50T
719	3-701-788-XX	s	SPRING, TENSION (12T)
720	3-703-074-01	s	CAP 3, SHAFT
721	3-717-246-01	o	LEVER, PRESS, P
722	3-717-247-01	o	LIMITER, P
723	3-717-248-01	o	SPRING
724	3-717-249-01	o	STOPPER, P
725	3-717-250-02	o	SHAFT, JOINT, P
726	1-640-163-12	o	PRINTED CIRCUIT BOARD, PTC-54

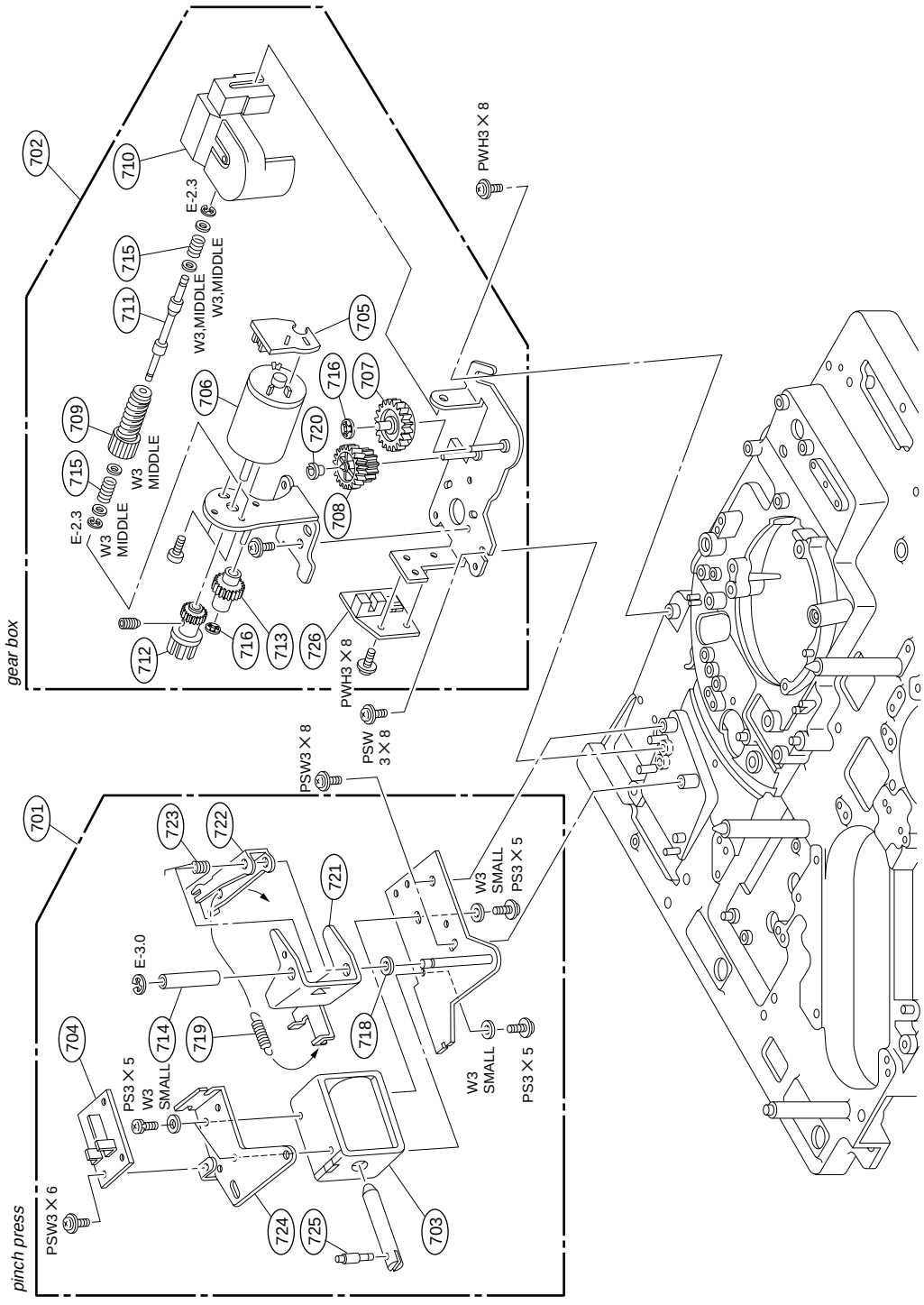
gear box
702
710
E-2.3
715
711
W3,MIDDLE
W3,MIDDLE
705
706
716
707
709
720
715
W3
MIDDLE
E-2.3
W3
MIDDLE
708
712
716
713
726
PWH3 X 8
PWH3 X 8
PSW
3 X 8
PSW3 X 8
701
723
722
721
W3
SMALL
PS3 X 5
E-3.0
704
714
719
718
PS3 X 5
W3
SMALL
W3
SMALL
PS3 X 5
PSW3 X 6
724
725
703
pinch press

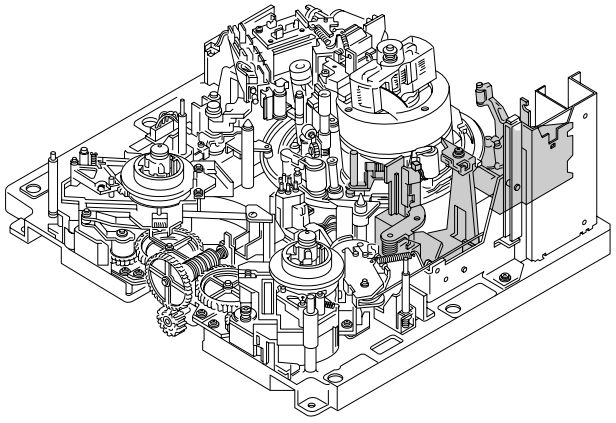

No.	Part No.	SP	Description
801	A-8274-876-F	s	DRAWER ASSY, T
802	A-8267-423-C	s	T-TEN ASSY
803	A-8267-555-D	s	TG-4 ASSY
804	A-8276-628-A	o	MOUNTED CIRCUIT BOARD, TR-79
805	X-3678-288-2	s	GUIDE ASSY, SLANT
806	X-3167-063-4	s	ARM ASSY, DRAWING, T
807	X-3167-064-5	s	ARM ASSY, T TEN
808	2-279-715-01	s	RIVET, NYLON
809	3-180-262-01	s	SPRING, TENSION
810	3-180-404-02	o	BASE, DRAWING, T
811	3-180-669-02	s	FLANGE, FIXED GUIDE USE
812	3-180-670-01	o	NUT, FIXED GUIDE ADJUSTMENT
813	3-180-708-01	s	PLATE, SLANT GUIDE ADJUSTMENT
814	3-180-710-03	s	GUARD, DRAWER
815	3-180-715-01	s	SPRING, (A) TORSION COIL
816	3-180-716-02	s	SPRING, (B) TORSION COIL
817	3-180-861-01	o	HOLDER, DME
818	3-180-863-03	s	BASE, SLANT GUIDE
819	3-190-819-01	s	FLANGE, DIA. 8
820	3-181-490-01	o	SLEEVE, DIA. 7
821	3-645-028-00	s	BEARING, BALL
822	3-669-596-01	s	WASHER (2.3), STOPPER
823	3-701-439-01	s	WASHER, POLY 3mm DIA., 0.13T
	3-701-439-11	s	WASHER, POLY 3mm DIA., 0.25T
	3-701-439-21	s	WASHER, POLY 3mm DIA., 0.50T
824	3-701-439-21	s	WASHER, POLY 3mm DIA., 0.50T
825	3-717-253-01	s	ROLLER
826	3-738-730-01	s	SPRING, COMPRESSION
827	1-543-316-31	s	HEAD, SENSING (SMALL TYPE)
828	X-3167-347-2	s	ROLLER ASSY, GUIDE
829	3-183-460-02	s	FLANGE (B), UPPER
830	3-183-462-02	s	FLANGE, LOWER
831	4-879-563-00	s	SPRING, COMPRESSION
832	X-3167-052-2	s	ROLLER ASSY, ONEBARE

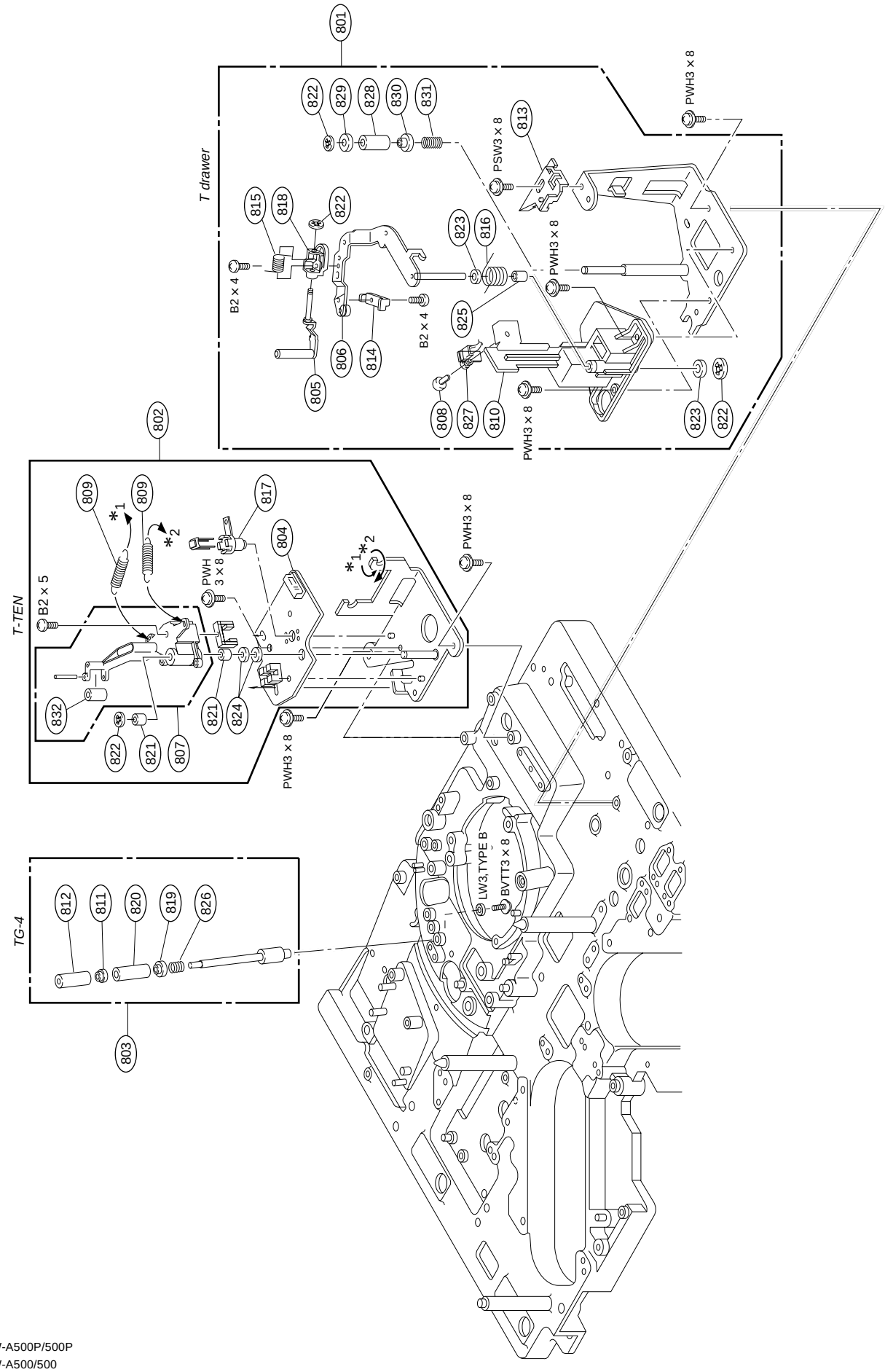
T drawer
801
822
829
828
830
831
PSW3 × 8
813
PWH3 × 8
815
818
822
823
816
B2 × 4
PWH3 × 8
825
B2 × 4
806
814
805
808
827
810
PWH3 × 8
823
822
802
T-TEN
809
*1
809
*2
817
PWH 3 × 8
804
*1
*2
PWH3 × 8
B2 × 5
832
822
821
807
821
824
PWH3 × 8
TG-4
812
811
820
819
826
803
LW3,TYPE B
BVTT3 × 8

CASSETTE COMPARTMENT BLOCK

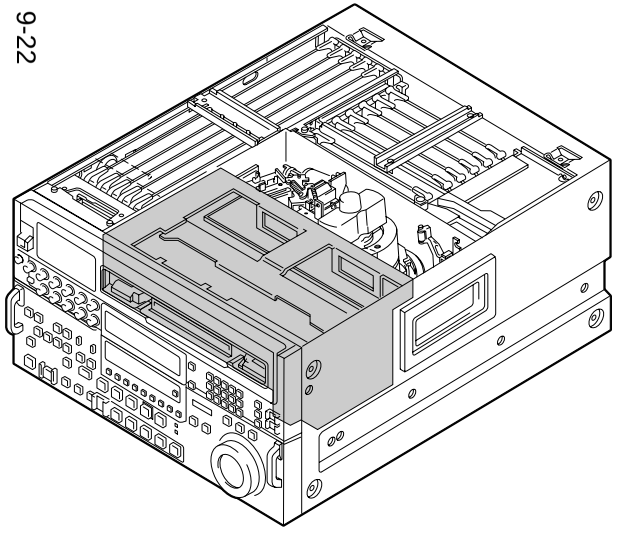

No.	Part No.	SP	Description
901	A-8267-589-G	s	CASSETE COMPRATMENT ASSY
902	A-8276-625-A	o	MOUNTED CIRCUIT BOARD, PC-70
903	A-8276-626-B	o	MOUNTED CIRCUIT BOARD, CL-29
904	A-8276-627-B	o	MOUNTED CIRCUIT BOARD, LP-81
905	A-8276-957-B	s	STAGE ASSY
907	X-3167-849-1	o	DECK (L) ASSY, PULLEY
908	X-3167-848-1	o	DECK (R) ASSY, PULLEY
909	X-3167-447-1	o	SLIDER (R) ASSY
910	X-3167-446-1	o	SLIDER (L) ASSY
*A 911	X-3166-217-1	s	MIRROR ASSY
*B	X-3166-217-2	s	MIRROR ASSY
912	1-665-836-11	s	PC BOARD, CL-41 FLEXIBLE
913	3-188-745-01	s	BEARING, BALL, (NO FRANGE)
914	3-171-367-06	o	SWITCH (R), IN
915	3-171-398-05	o	SWITCH (L), IN
916	3-171-399-02	o	GUIDE (R), CASSETTE
917	3-171-400-04	o	GUIDE (L), CASSETTE
919	3-171-418-03	s	WORM
920	3-171-419-11	s	WHEEL
921	3-171-420-04	o	SHUTTER
922	3-171-421-01	o	SLIDER, DOOR SWITCHING
923	3-171-422-01	o	LEVER, DOOR SWITCHING
924	3-171-423-02	o	JOINT, MOTOR
925	3-171-424-02	o	HOLDER, SENSOR
926	3-171-457-03	o	SHAFT, JOINT
927	3-171-458-01	s	BELT, TIMING
928	3-171-459-01	s	ROLLER, GUIDE
929	3-171-460-01	s	ROLLER, SLIDER
930	3-171-461-04	o	SHAFT, RETAINER, L CASSETTE
934	3-171-465-01	o	GEAR, DRIVING
935	3-171-466-02	o	GEAR, LIMITER
936	3-171-479-01	o	GEAR, MIDWAY
937	3-171-480-01	o	SHAFT, WORM WHEEL
*A 938	3-171-508-04	o	HOLDER, LAMP
*B	3-171-508-05	o	HOLDER, LAMP
939	3-171-510-02	s	DOOR, CASSETTE
940	3-174-908-01	s	STOPPER
941	3-176-139-01	s	SPRING, C GUIDE
942	3-194-680-01	s	SPRING, TENSION
944	3-176-583-01	o	PULLEY (A)
945	3-176-584-01	o	PULLEY (B)
946	3-176-598-02	o	SPRING, GROUND
947	3-181-430-01	o	WHEEL, WORM
948	3-181-431-01	o	RUBBER, LIMITER
949	3-548-757-00	s	SPRING, TENSION
950	3-579-759-00	s	SPRING, COMPRESSION
951	3-646-214-00	s	SPRING
952	3-671-150-01	o	CLAMP
953	3-672-461-00	s	SPRING, TENSION
954	3-677-193-00	o	PIN, STOPPER
955	3-698-217-11	s	BEARING (NO FLANGE), BALL
956	3-701-441-21	s	WASHER, POLY 4mm DIA., 0.50T
957	3-701-443-21	s	WASHER, POLY 5mm DIA., 0.50T (for S/N 10001 thru. 12891: DVW-A500P(EK)) (for S/N 10001 thru. 10054: DVW-A500P(UC)) (for S/N 10001 thru. 11700: DVW-500P(EK)) (for S/N 10001 thru. 10030: DVW-500P(UC)) (for S/N 10001 thru. 11950: DVW-A500(UC)) (for S/N 10001 thru. 11019: DVW-500(UC)) (for S/N 10001 thru. 10620: DVW-A500(J)) (for S/N 10001 thru. 10100: DVW-500(J)) (for S/N 10001 thru. 11109: DVW-A510P(EK)) (for S/N 10001 thru. 10340: DVW-510P(EK)) (for S/N 10001 thru. 10474: DVW-A510(UC)) (for S/N 10001 thru. 10139: DVW-510(UC)) (for S/N 10001 thru. 10185: DVW-A510(J)) (for S/N 10001 thru. 10030: DVW-510(J))
958	3-712-786-01	s	DAMPER, OIL
959	3-717-369-04	o	STOPPER, DOOR
960	4-858-799-00	s	SPRING, TENSION
961	1-698-152-11	s	MOTOR, DC (SVD-1449)
962	3-182-706-01	s	SPACER
963	3-171-459-01	s	ROLLER, GUIDE (for S/N 10001 thru. 12891: DVW-A500P(EK)) (for S/N 10001 thru. 10054: DVW-A500P(UC)) (for S/N 10001 thru. 11700: DVW-500P(EK)) (for S/N 10001 thru. 10030: DVW-500P(UC)) (for S/N 10001 thru. 11950: DVW-A500(UC)) (for S/N 10001 thru. 11019: DVW-500(UC)) (for S/N 10001 thru. 10620: DVW-A500(J)) (for S/N 10001 thru. 10100: DVW-500(J)) (for S/N 10001 thru. 11109: DVW-A510P(EK)) (for S/N 10001 thru. 10340: DVW-510P(EK)) (for S/N 10001 thru. 10474: DVW-A510(UC)) (for S/N 10001 thru. 10139: DVW-510(UC)) (for S/N 10001 thru. 10185: DVW-A510(J)) (for S/N 10001 thru. 10030: DVW-510(J))
	3-188-273-01	s	ROLLER (B), GUIDE (for S/N 12892 and higher: DVW-A500P(EK)) (for S/N 10055 and higher: DVW-A500P(UC)) (for S/N 11701 and higher: DVW-500P(EK)) (for S/N 10031 and higher: DVW-500P(UC)) (for S/N 11951 and higher: DVW-A500(UC)) (for S/N 11020 and higher: DVW-500(UC)) (for S/N 10621 and higher: DVW-A500(J)) (for S/N 10101 and higher: DVW-500(J)) (for S/N 11110 and higher: DVW-A510P(EK)) (for S/N 10341 and higher: DVW-510P(EK)) (for S/N 10475 and higher: DVW-A510(UC)) (for S/N 10140 and higher: DVW-510(UC)) (for S/N 10186 and higher: DVW-A510(J)) (for S/N 10031 and higher: DVW-510(J))
964	X-3167-848-1	o	DECK(R) ASSY, PULLEY
965	X-3167-849-1	o	DECK(L) ASSY, PULLEY
966	3-190-575-01	s	SPRING, TENSION
967	X-3168-049-1	s	LEAF SPRING(R) ASSY
968	X-3168-050-1	s	LEAF SPRING(L) ASSY
969	3-531-576-11	s	RIVET

*A for S/N 10001 thru. 21892: DVW-A500P(EK)
for S/N 10001 thru. 10358: DVW-A500P(UC)
for S/N 10001 thru. 16770: DVW-500P(EK)
for S/N 10001 thru. 10220: DVW-500P(UC)

*B for S/N 21893 and higher: DVW-A500P(EK)
for S/N 10359 and higher: DVW-A500P(UC)
for S/N 16771 and higher: DVW-500P(EK)
for S/N 10221 and higher: DVW-500P(UC)

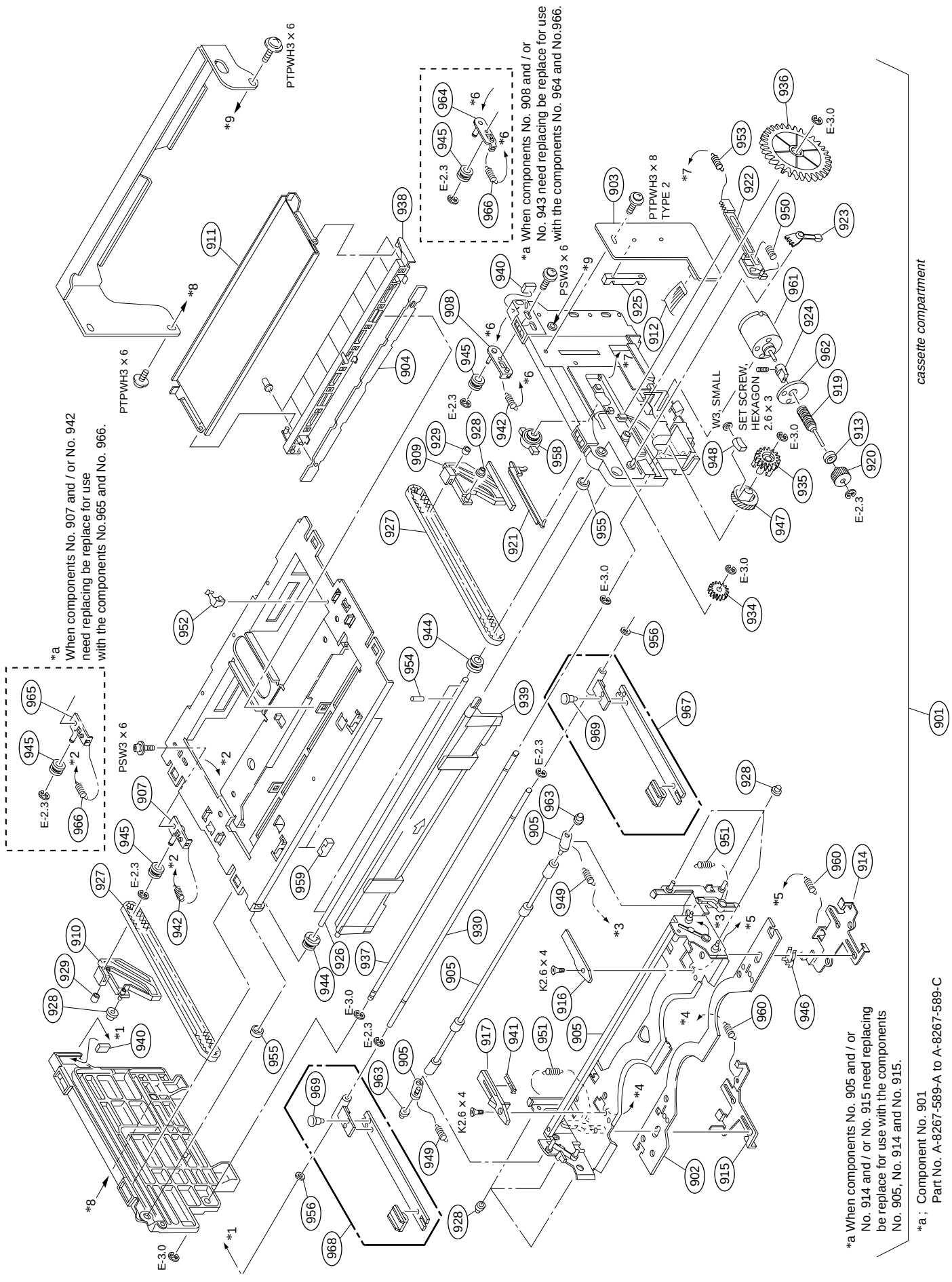
*a When components No. 908 and / or No. 943 need replacing be replace for use with the components No. 964 and No.966.
*a When components No. 907 and / or No. 942 need replacing be replace for use with the components No.965 and No. 966.
*a When components No. 905 and / or No. 914 and / or No. 915 need replacing be replace for use with the components No. 905, No. 914 and No. 915.
*a ; Component No. 901 Part No. A-8267-589-A to A-8267-589-C
cassette compartment
PTPWH3 × 6
PSW3 × 6
PTPWH3 × 8 TYPE 2
W3, SMALL SET SCREW, HEXAGON 2.6 × 3
K2.6 × 4
E-2.3
E-3.0

PRINTED CIRCUIT BOARD (BOTTOM SIDE) BLOCK

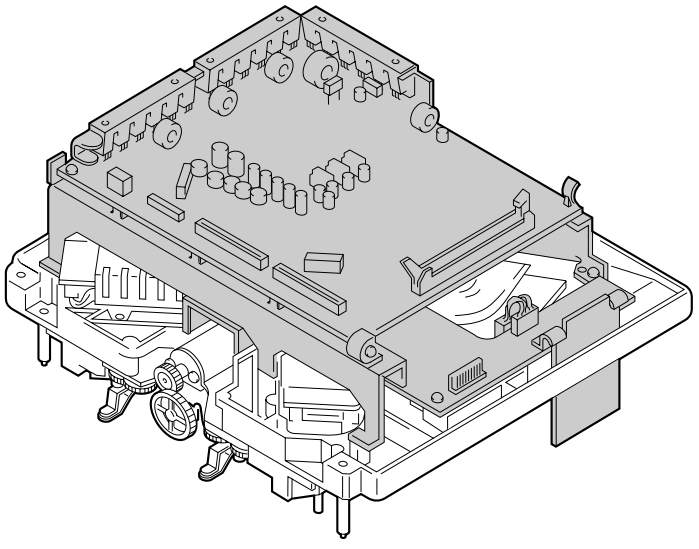

No.	Part No.	SP	Description
1001	A-8275-068-A	o	MOUNTED CIRCUIT BOARD, DT-34P (for DVW-A500P/500P(EK))
	A-8275-166-A	o	MOUNTED CIRCUIT BOARD, DT-34 (for DVW-A500P(UC))
	A-8275-266-A	o	MOUNTED CIRCUIT BOARD, DT-34PG (for DVW-500P(UC))
1002	A-8322-330-B	o	MOUNTED CIRCUIT BOARD, DR-307A (for S/N 21138 and higher: DVW-A500P(EK)) (for S/N 10309 and higher: DVW-A500P(UC))
	A-8322-331-B	o	MOUNTED CIRCUIT BOARD, DR-307D (for S/N 16516 and higher: DVW-500P(EK)) (for S/N 10211 and higher: DVW-500P(UC))
	A-8275-069-B	o	MOUNTED CIRCUIT BOARD, DR-200P (for S/N 10001 thru. 21137: DVW-A500P(EK)) (for S/N 10001 thru. 16515: DVW-500P(EK))
	A-8275-267-B	o	MOUNTED CIRCUIT BOARD, DR-200PG (for S/N 10001 thru. 10308: DVW-A500P(UC)) (for S/N 10001 thru. 10210: DVW-500P(UC))
1003	A-8276-620-B	o	MOUNTED CIRCUIT BOARD, HN-181
1004	A-8276-621-A	o	MOUNTED CIRCUIT BOARD, HN-184
1005	A-8276-623-B	o	MOUNTED CIRCUIT BOARD, HN-185
1007	3-180-760-01	o	SUPPORT, DR
1010	3-180-819-02	o	BRACKET, DEW SENSOR

No.	Part No.	SP	Description
1011	3-180-852-01	o	BRACKET, TRANSISTOR
1012	3-180-854-03	o	COVER, MR SENSOR
1013	3-180-873-07	o	SHEET, INSULATING (DR) (for S/N 23263 and higher: DVW-A500P(EK)) (for S/N 10399 and higher: DVW-A500P(UC)) (for S/N 17276 and higher: DVW-500P(EK)) (for S/N 10241 and higher: DVW-500P(UC))
	3-180-873-06	o	SHEET, INSULATING (DR) (for S/N 10001 thru. 23262: DVW-A500P(EK)) (for S/N 10001 thru. 10398: DVW-A500P(UC)) (for S/N 10001 thru. 17275: DVW-500P(EK)) (for S/N 10001 thru. 10240: DVW-500P(UC))
1014	3-180-886-02	o	HEAT SINK (DR)
1015	3-181-651-01	o	COVER (RS), HARNESS
1016	3-531-576-11	s	RIVET
1017	3-531-576-21	s	RIVET
1018	3-646-084-00	o	CAP, REINFORCEMENT
1019	3-646-086-00	o	HOLDER, ROD
1020	3-703-141-00	o	HOLDER, PRINTED CIRCUIT BOARD
1021	3-703-249-01	s	SCREWS, PTTWH 3x6

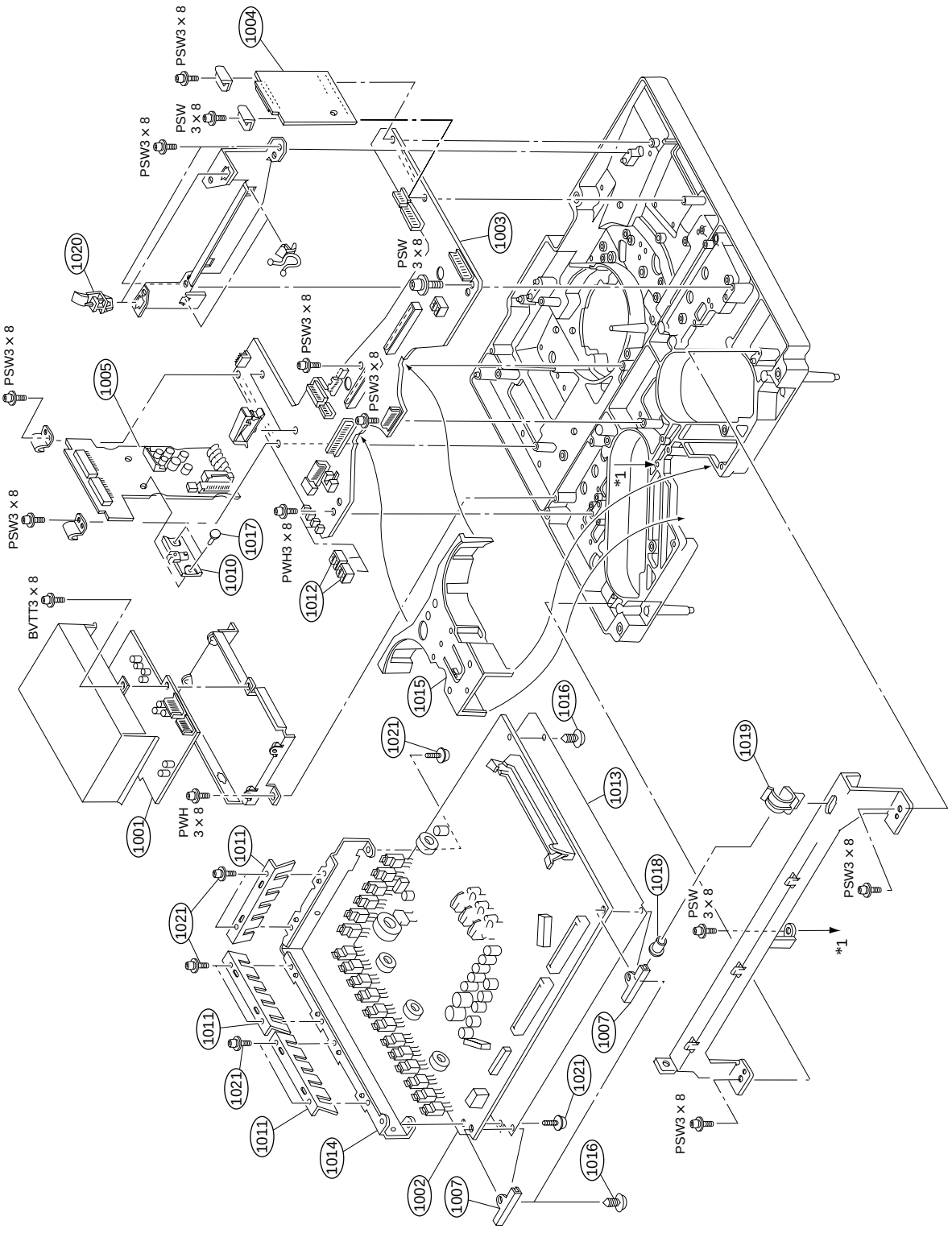
1004
PSW3 × 8
PSW
3 × 8
PSW3 × 8
1020
1003
PSW
3 × 8
PSW3 × 8
PSW3 × 8
1005
PSW3 × 8
PSW3 × 8
1017
1010
PWH3 × 8
1012
BVTT3 × 8
*1
1015
1016
1021
1019
1013
1001
PWH
3 × 8
1011
1018
PSW
3 × 8
PSW3 × 8
1021
*1
1011
1007
1021
1021
1011
1014
1016
PSW3 × 8
1002
1007

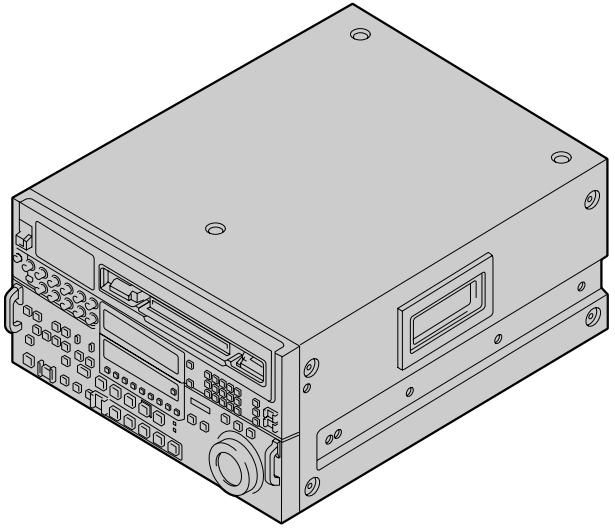

No.	Part No.	SP	Description
1101	A-8267-397-A	o	LID ASSY, ASSY
1102	X-3642-018-3	o	HANDLE ASSY
1103	3-171-369-01	o	LID (A), UPPER, AIR GUARD
1104	3-171-410-01	o	RETAINER (S), PC BOARD
1105	3-171-489-01	o	BRACKET, PLATE, BOTTOM
1106	3-171-533-04	o	CABINET (RIGHT)
1107	3-171-534-04	o	CABINET (LEFT)
1108	X-3167-285-1	o	PLATE ASSY, BOTTOM
1109	3-180-641-01	o	PLATE (L), PC BOARD RETAINER
1110	3-180-642-01	o	PLATE (S), PC BOARD RETAINER
1111	3-180-643-01	o	CUSHION, PC BOARD RETAINER
1112	3-688-102-01	o	SPACER, M4
1113	3-703-848-01	o	LABEL (N), SUB CAUTION (for DVW-A500P/500P(UC))
1114	3-717-392-01	o	SCREW, LID
1115	3-733-690-01	s	+B 4X6 (CU,NI)

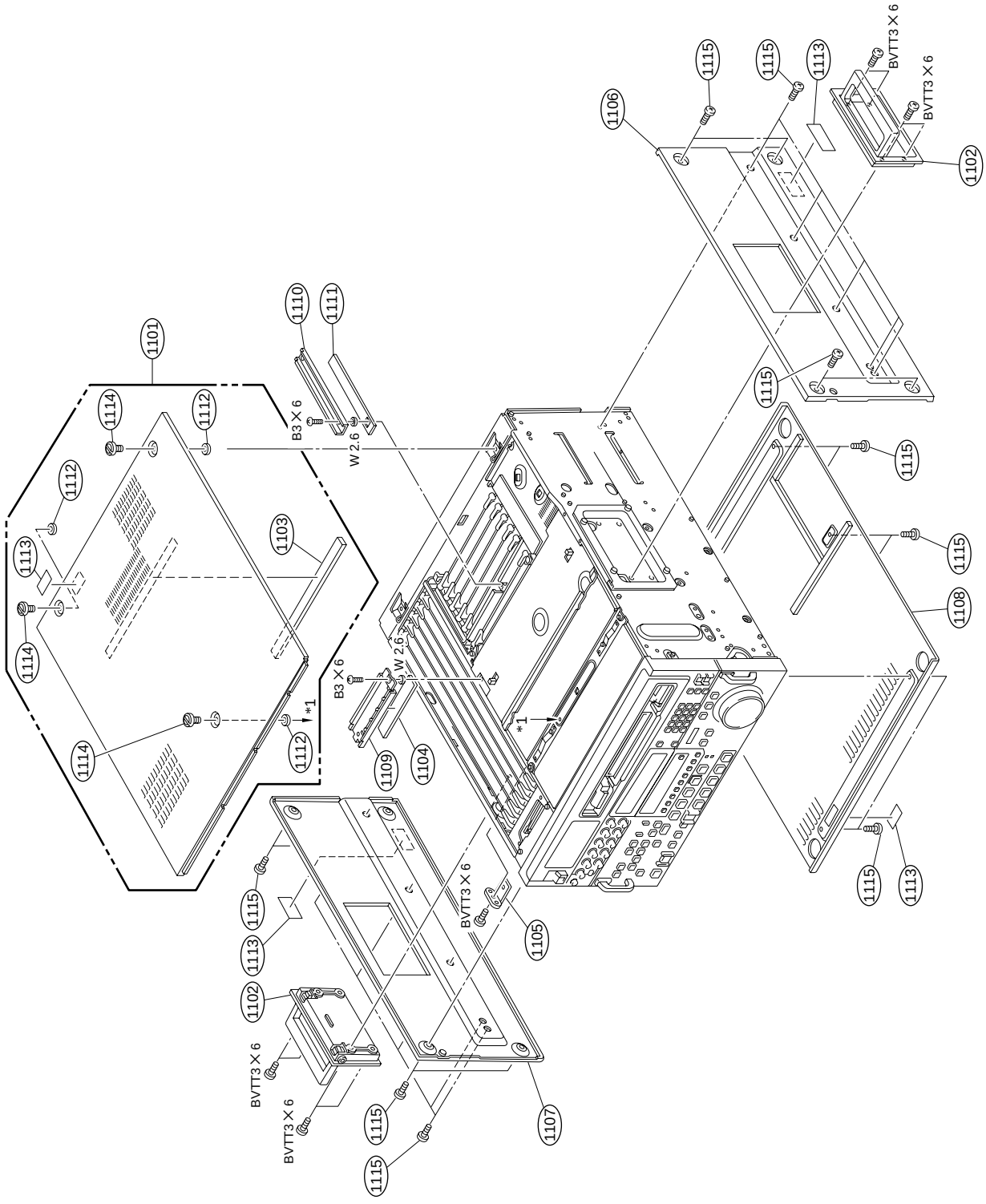
1101
1102
1103
1104
1105
1106
1107
1108
1109
1110
1111
1112
1113
1114
1115
B3 × 6
W 2.6
BVTT3 × 6
*1

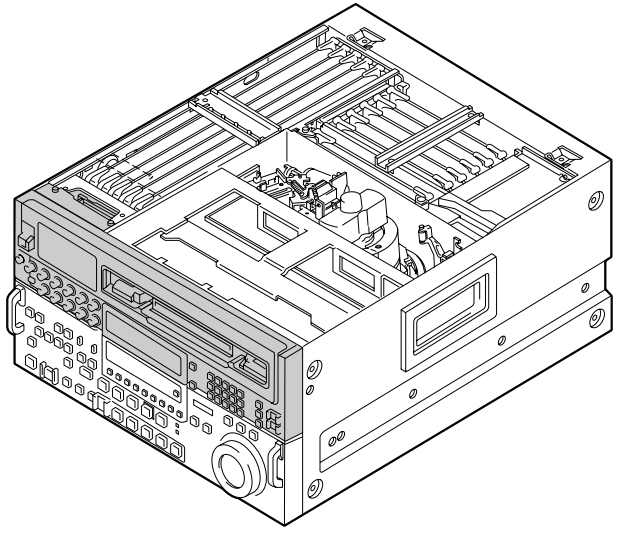

No.	Part No.	SP	Description
1201	A-8278-847-C	o	GUIDE ASSY, SC
1202	A-8275-075-A	o	MOUNTED CIRCUIT BOARD, VR-153
1203	A-8275-076-A	o	MOUNTED CIRCUIT BOARD, SWC-17
1204	A-8275-077-B	o	MOUNTED CIRCUIT BOARD, FP-58
1205	A-8275-078-A	o	MOUNTED CIRCUIT BOARD, VR-152
1206	X-3167-825-1	o	KNOB ASSY (P), VOL
1207	X-3167-824-1	o	KNOB ASSY (R), VOL
1208	X-3167-129-9	o	SUB ASSY, FRONT PANEL
1209	1-517-185-22	s	INDICATOR MODULE, FLUORESCENT
1210 ⚠	1-762-953-11	s	SWITCH, POWER
1211	2-217-533-00	s	SPRING, COMPRESSION
1212	2-269-962-00	o	COVER, SWITCH
1213	3-180-747-01	o	GUARD (S), AIR
1215	3-608-272-02	o	SUPPORT (A), SC GUIDE
1216	3-615-768-01	o	SUPPORT (B), SC GUIDE
1217	3-180-812-01	o	LABEL (for DVW-A500P)
	3-181-174-01	o	LABEL (for DVW-500P)
1218	3-180-813-01	o	LABEL, A/D (only DVW-A500P)
1219	3-180-822-05	s	KEY TOP 6X6
1220	3-181-398-12	s	KEY TOP 6X6

No.	Part No.	SP	Description
1221	3-682-057-21	s	SPACER (SMALL)
1222	3-677-193-00	o	PIN, STOPPER
1223	3-688-814-01	s	CAP, SWITCH
1224	3-701-441-21	s	WASHER, POLY 4mm DIA., 0.50T
1225	3-703-141-00	o	HOLDER, PRINTED CIRCUIT BOARD
1227	3-717-615-01	o	SPRING
1228	3-717-616-01	o	SPRING
1229	3-717-617-01	o	SHAFT, SC GUIDE
1230	3-717-618-01	o	GUIDE (LEFT), SC
1231	3-717-619-02	o	GUIDE (RIGHT), SC
1232	3-717-620-01	o	PLATE, OUT, C-LOCK
1233	4-314-320-00	o	HOLDER, WIRE
1234	4-874-187-01	o	CLIP, CABLE
1235	4-937-336-11	s	HOLDER, LED
1236	4-937-336-51	o	HOLDER, LED
1237	3-615-779-01	o	COVER (SC)
1238	3-701-818-00	o	EDGING (016)

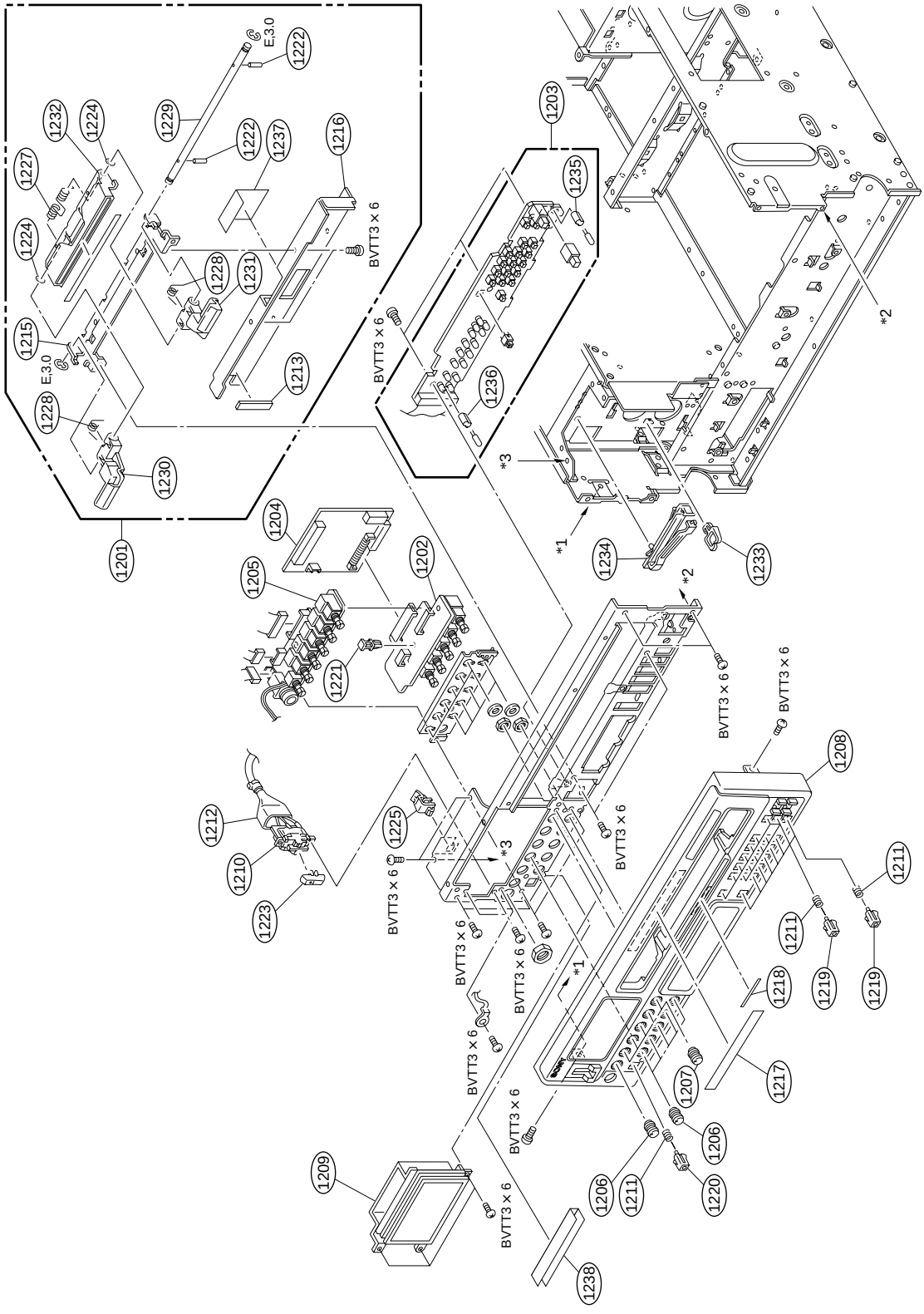
1201
1202
1203
1204
1205
1206
1207
1208
1209
1210
1211
1212
1213
1215
1216
1217
1218
1219
1220
1221
1222
1223
1224
1225
1227
1228
1229
1230
1231
1232
1233
1234
1235
1236
1237
1238
E.3.0
BVTT3 × 6
*1
*2
*3

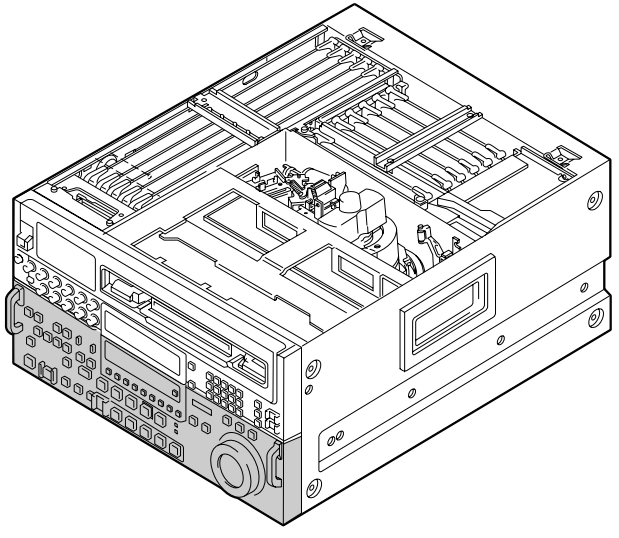

No.	Part No.	SP	Description
1301	A-8267-410-G	s	DIAL ASSY, SEARCH
1302	A-8267-542-C	o	PANEL ASSY, KEY
1303	A-8274-058-A	o	MOUNTED CIRCUIT BOARD, DP-176
1304	A-8275-067-A	o	MOUNTED CIRCUIT BOARD, KY-231
1305	A-8276-585-B	o	MOUNTED CIRCUIT BOARD, PTC-69
1306	1-454-606-11	s	SOLENOID, PLUNGER
1307	2-124-691-01	s	ROLLER
1308	2-124-693-02	s	PLATE
1309	2-124-695-01	o	PLATE, CUSHION
1310	2-143-603-01	o	ARM, RETURN
1311	2-143-613-01	s	SPRING, TORSION
1312	2-217-533-00	s	SPRING, COMPRESSION
1313	3-180-632-02	o	KNOB, DIAL
1314	3-180-633-03	s	RUBBER, DIAL KNOB
1315	3-180-638-02	o	ARM, JOINT GEAR
1316	3-180-639-01	o	PLATE, MODE SELECTION
1317	3-180-640-02	o	GEAR, JOINT
1318	3-180-644-02	o	PROTECTOR, KY
1319	3-180-648-03	o	PROTECTOR, PTC
1320	3-180-649-02	o	LINK, SOLENOID
1321	3-180-650-03	s	FG-RING
1322	3-180-651-04	o	CAM, SD
1323	3-180-816-03	s	KEY TOP, 5x9
1324	3-180-817-03	s	KEY TOP, 9x16
1325	3-180-858-01	o	HANDLE

No.	Part No.	SP	Description
1326	3-180-859-02	o	HOLDER, SENSOR
1327	3-181-398-02	s	KEY TOP 6x6 (WHITE)
1328	3-181-398-12	s	KEY TOP 6x6 (GRAY)
1329	3-181-765-01	s	KEY TOP 3x5
1330	3-181-766-01	s	PIN, KEY TOP
1331	3-181-833-02	o	SPACER
1332	3-181-956-01	o	SPRING, COMPRESSION
1333	3-618-225-03	s	NUT, PLATE
1334	3-645-189-11	s	SPRING, TENSION
1335	3-668-124-00	o	HOLDER, LED
1336	3-701-441-21	s	WASHER, POLY 4mm DIA., 0.50T
1337	3-704-198-11	o	SUPPORT, PC
1338	3-686-086-01	s	CUSHION, BUTTON
1339	3-701-443-21	s	WASHER, POLY 5mm DIA., 0.50T
1340	3-717-380-11	o	GUARD, REC
1341	4-937-336-51	o	HOLDER, LED
1342	3-703-249-01	s	SCREW, PTTWH 3x6
1343	3-180-904-03	o	CHASSIS, KEY PANEL

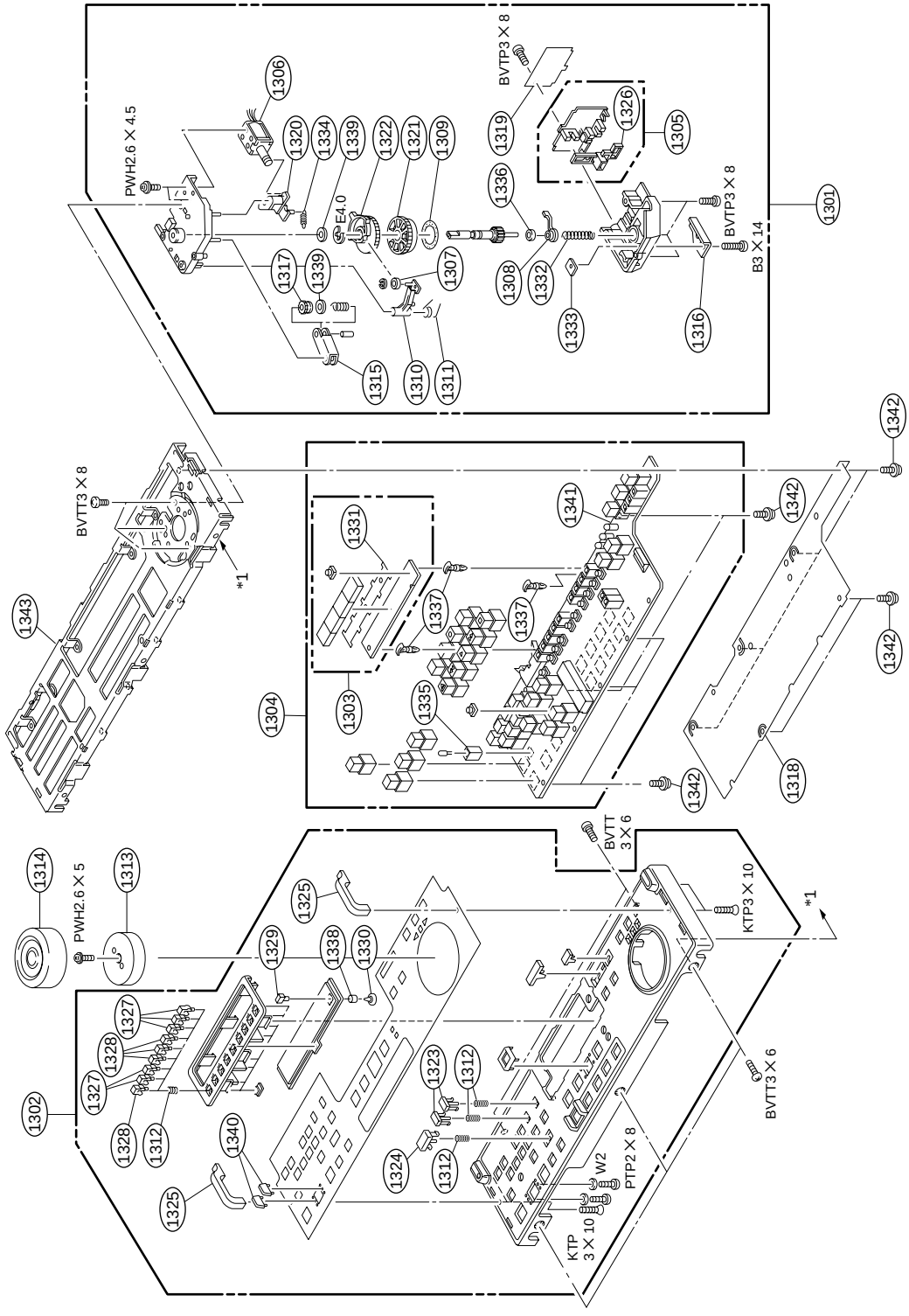
1301
1302
1303
1304
1305
1306
1307
1308
1309
1310
1311
1312
1313
1314
1315
1316
1317
1318
1319
1320
1321
1322
1323
1324
1325
1326
1327
1328
1329
1330
1331
1332
1333
1334
1335
1336
1337
1338
1339
1340
1341
1342
1343
PWH2.6 X 4.5
E4.0
BVTP3 X 8
BVTP3 X 8
B3 X 14
BVTT3 X 8
*1
PWH2.6 X 5
BVTT 3 X 6
KTP3 X 10
*1
BVTT3 X 6
PTP2 X 8
W2
KTP 3 X 10

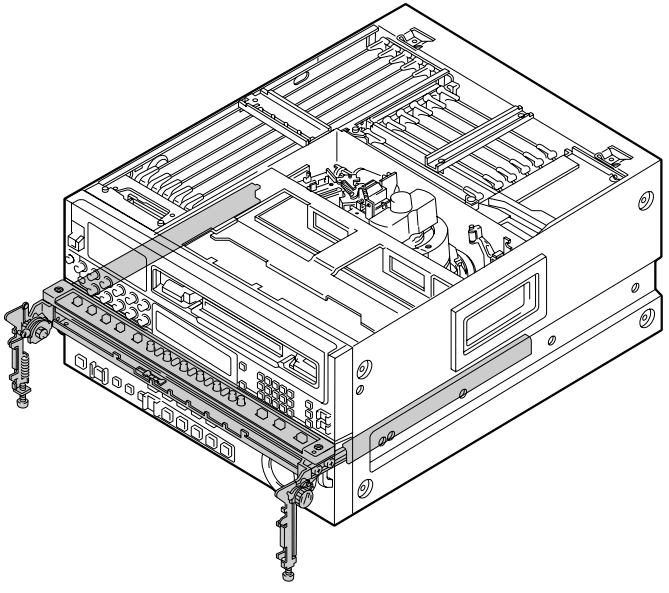

No.	Part No.	SP	Description
1401	A-8275-071-A	o	MOUNTED CIRCUIT BOARD, SWC-18A (for DVW-A500P)
	A-8275-157-A	o	MOUNTED CIRCUIT BOARD, SWC-18 (for DVW-500P)
1402	A-8275-080-A	o	MOUNTED CIRCUIT BOARD, SWC-19AP (for DVW-A500P)
	A-8275-159-A	o	MOUNTED CIRCUIT BOARD, SWC-19P (for DVW-500P)
1403	X-3167-022-4	o	CHASSIS ASSY, SUB
1404	X-3167-065-3	o	SLIDER (R) ASSY
1405	X-3167-066-3	o	SLIDER (L) ASSY
1406	X-3167-067-7	o	PANEL ASSY (PAL), SUB (for DVW-A500P)
	X-3167-100-6	o	PANEL ASSY (PAL), SUB (for DVW-500P)
1407	X-3717-253-1	o	RAIL ASSY, SLIDE
1408	3-180-476-01	o	PLATE, ORNAMENTAL ARP SWC-19 (for DVW-A500P)
	3-181-175-01	o	PLATE, ORNAMENTAL DRP SWC-19 (for DVW-500P)
1409	3-180-814-01	o	PLATE, ORNAMEN(SMALL), SLIDE SW
1410	3-717-393-03	o	PLATE (LARGE), ORNAMENTAL, SW
1411	3-185-303-02	o	SEAL, EJECT
1412	3-188-703-02	s	CONNECTOR, PLATE, FIXED
1413	3-191-626-01	s	PLATE(A), CONNECTOR FIXED

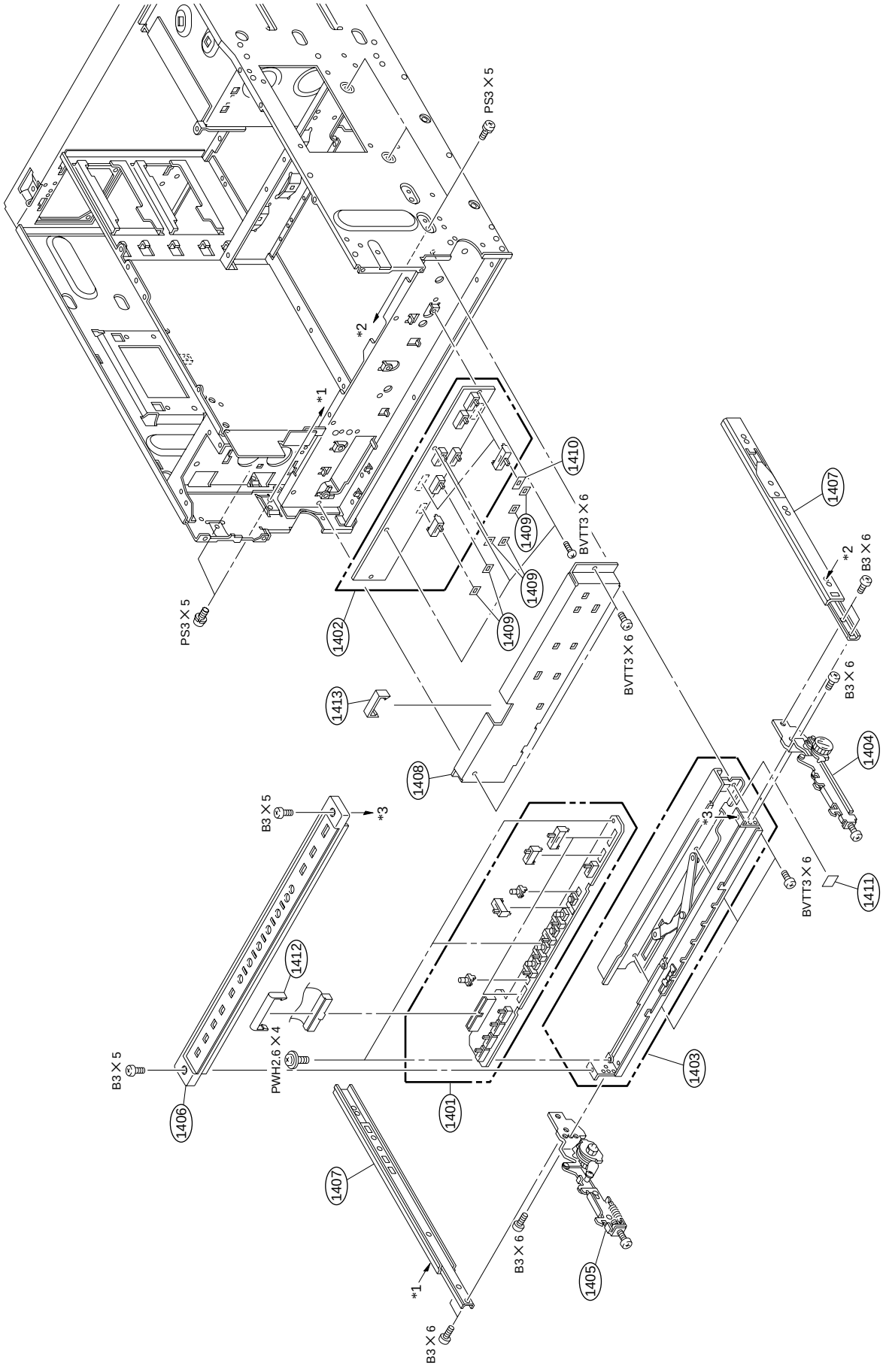
PS3 X 5
*2
*1
1410
1409
1409
1409
BVTT3 X 6
1407
*2
B3 X 6
PS3 X 5
1402
BVTT3 X 6
B3 X 6
1413
1404
1408
B3 X 5
*3
*3
BVTT3 X 6
1411
1412
PWH2.6 X 4
B3 X 5
1406
1401
1403
1407
B3 X 6
1405
*1
B3 X 6

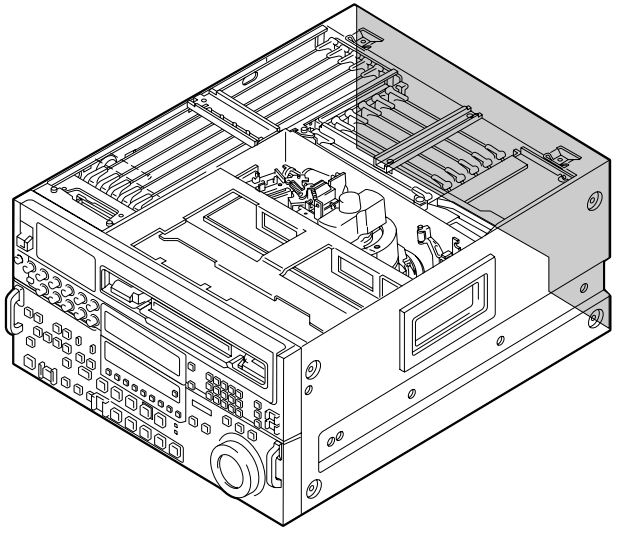

No.	Part No.	SP	Description
1501	A-8275-082-A	o	MOUNTED CIRCUIT BOARD, CP-220
1502	A-8275-083-A	o	MOUNTED CIRCUIT BOARD, CP-218
1503	A-8276-624-A	o	MOUNTED CIRCUIT BOARD, AC-139
1504 ⚠	1-413-831-26	s	SWITCHING REGULATOR
1505 ⚠	1-576-036-11	s	BREAKER, CIRCUIT
1506	1-750-881-11	s	CONVERTER, COAXIAL CONNECTOR
1507	2-990-241-02	s	HOLDER (A), PLUG
1508	3-171-450-01	o	ADAPTOR, SW
1509	3-173-384-01	o	SPACER, ORNAMENTAL PLATE
1510	3-180-477-03	o	COVER, HARNESS
1512	3-180-662-01	o	PANEL, POWER
1513	3-180-675-01	o	PANEL, OP
1514	3-180-885-02	o	PANEL, (R) CONNECTOR
1515	3-181-886-03	o	PLATE, SHIELD, POWER
1516	3-531-576-01	s	RIVET
1518	3-717-394-03	o	PLATE (SMALL), ORNAMENTAL, SW
1519	3-727-029-01	o	BRACKET, BREAKER
1520	1-541-431-41	s	FAN, DC
1521	3-703-845-01	o	LABEL(N)(U/C), MAIN CAUTION (for DVW-A500P/500P(UC))

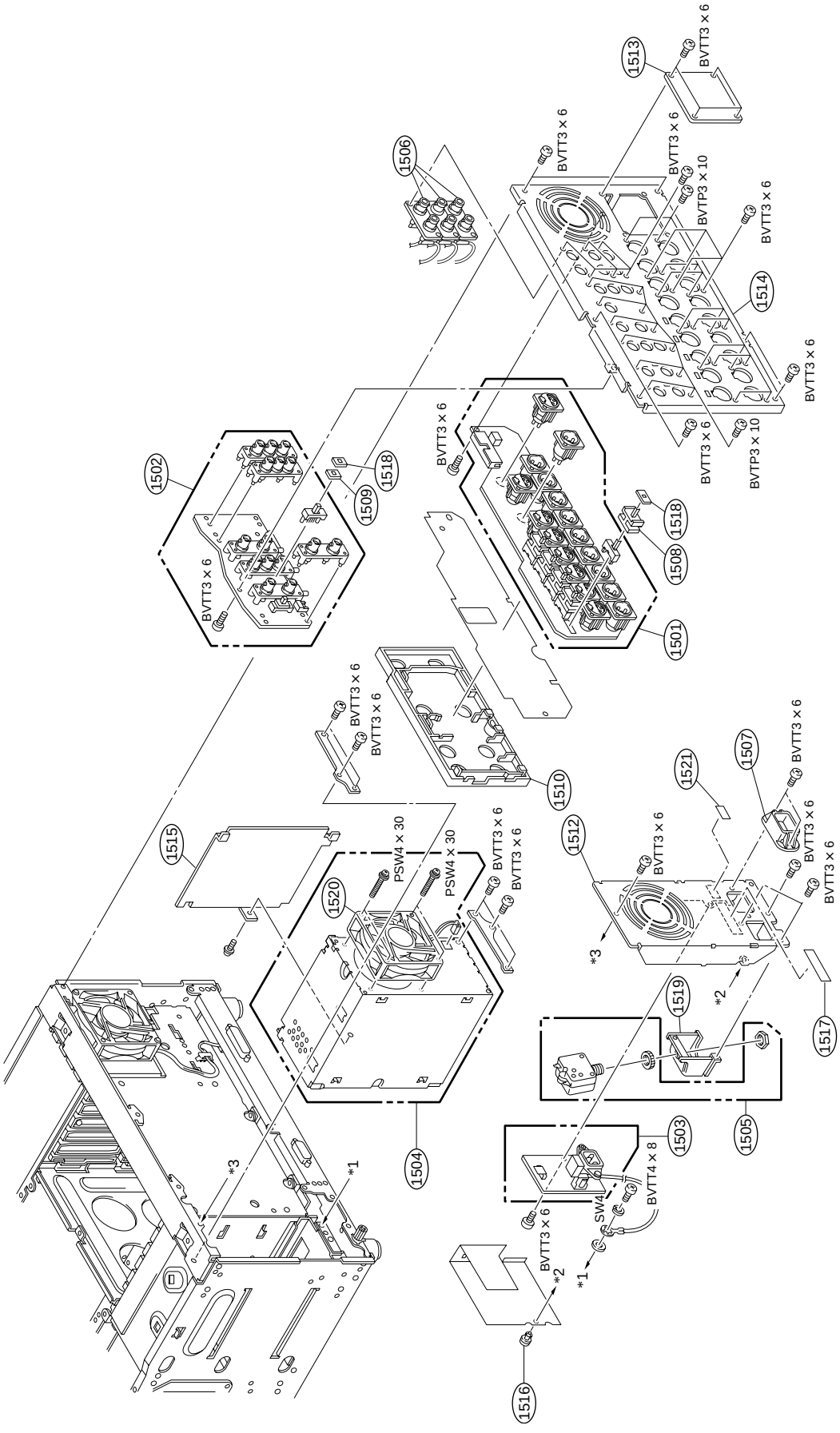
1506
1513
BVTT3 × 6
BVTT3 × 6
BVTT3 × 6
BVTP3 × 10
BVTT3 × 6
1514
BVTT3 × 6
BVTT3 × 6
BVTP3 × 10
1502
1518
1509
BVTT3 × 6
BVTT3 × 6
1518
1508
1501
BVTT3 × 6
BVTT3 × 6
1510
1515
PSW4 × 30
PSW4 × 30
BVTT3 × 6
BVTT3 × 6
1520
1521
1507
BVTT3 × 6
1512
BVTT3 × 6
BVTT3 × 6
BVTT3 × 6
*3
*2
1519
1517
1504
1503
1505
*3
*1
BVTT4 × 8
SW4
BVTT3 × 6
*2
*1
1516

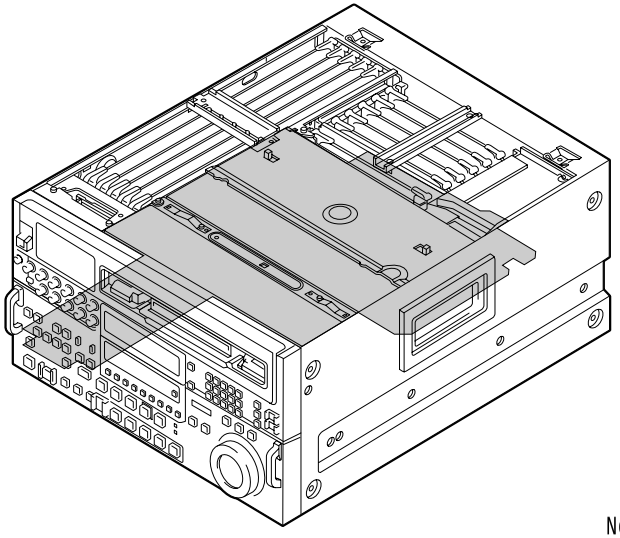

No.	Part No.	SP	Description
1601	A-8267-384-D	s	BRACKET ASSY, CASSETTE COMPARTMENT
1602	A-8267-385-D	o	PLATE (MD) ASSY
1603	A-8276-622-A	o	MOUNTED CIRCUIT BOARD, MB-441A (for DVW-A500P/A510P)
	A-8276-657-A	o	MOUNTED CIRCUIT BOARD, MB-441 (for DVW-500P/510P)
*A 1604	X-2068-004-1	s	TERMINAL ASSY
1605	1-698-785-51	s	FAN, DC(80 SQUARE)
*A 1606	2-068-008-00	s	WASHER
1607	2-132-434-01	s	CLIP, WIRE
1608	3-180-479-03	o	PLATE, MR
1609	3-615-813-01	o	SPACER (D)
1610	3-180-635-04	o	PLATE, BT
1611	3-180-636-02	o	PLATE, FT
1612	3-180-654-02	o	PANEL, D-SUB
1613	3-180-655-01	o	HARNESS (A), COVER
1614	3-180-656-01	o	GUARD (MB3), AIR
1615	3-615-817-01	o	SPACER (B)
1616	3-180-751-01	o	MD, SLIDER
1617	3-180-752-01	o	BRACKET, SLIDER
1618	3-180-753-02	o	MD, PLATE SPRING
1619	3-181-652-03	o	HOLDER, HARNESS
1620	3-642-656-01	s	FOOT
1621	3-697-707-01	o	CLAMP (A), HARNESS
1622	3-717-306-01	o	SPRING
1623	3-182-786-01	o	SPRING, CASSETTE COMPARTMENT
1624	3-650-537-00	o	WASHER

*A for S/N 10001 thru. 22072: DVW-A500P(EK)
for S/N 10001 thru. 10368: DVW-A500P(UC)
for S/N 10001 thru. 16795: DVW-500P(EK)
for S/N 10001 thru. 10220: DVW-500P(UC)

*B for S/N 22073 and higher: DVW-A500P(EK)
for S/N 10369 and higher: DVW-A500P(UC)
for S/N 16796 and higher: DVW-500P(EK)
for S/N 10221 and higher: DVW-500P(UC)

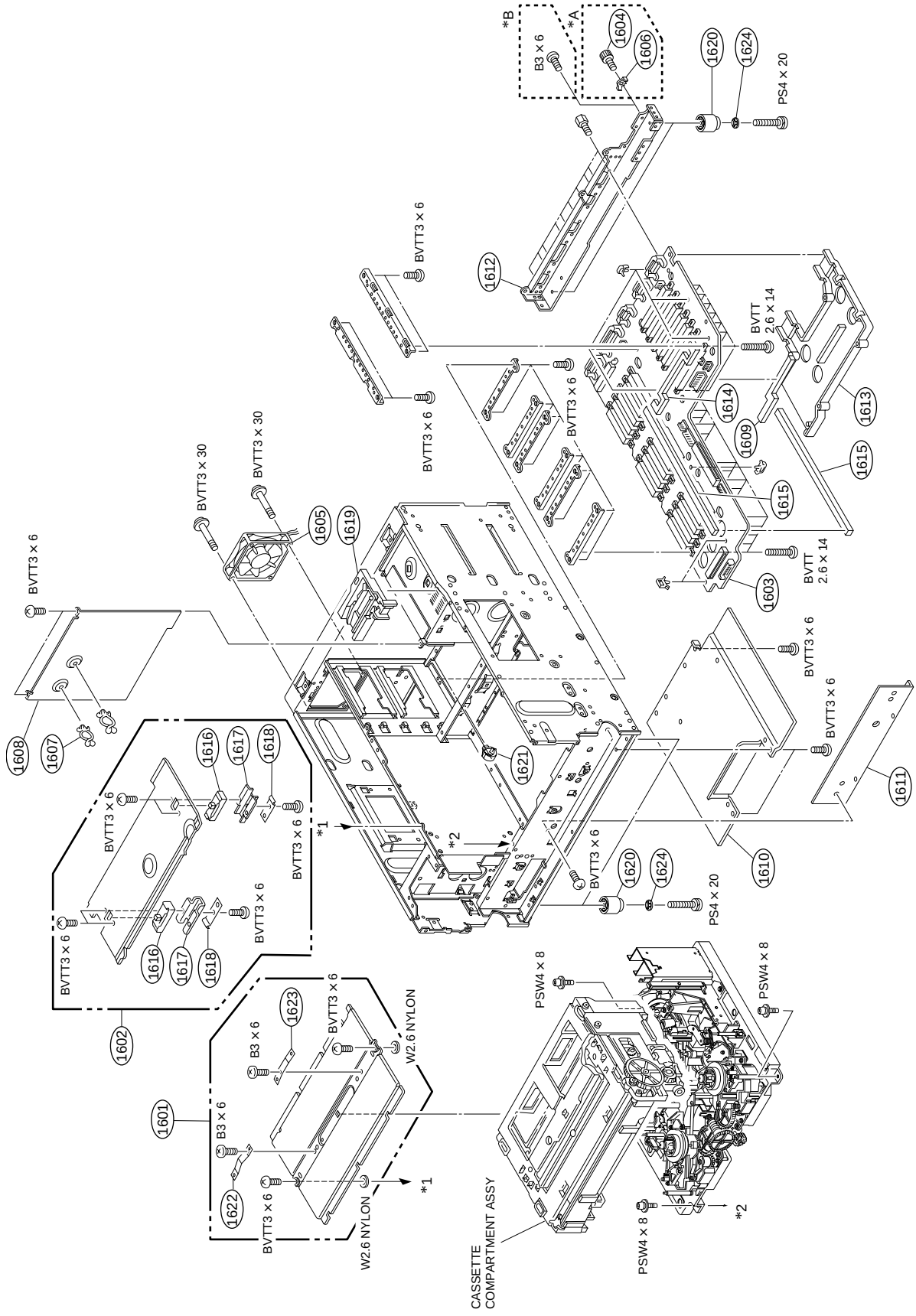
*B
*A
B3 × 6
1604
1606
1620
1624
PS4 × 20
BVTT3 × 6
1612
BVTT
2.6 × 14
1614
1613
1609
1615
1603
BVTT3 × 30
1605
1619
1608
1607
1616
1617
1618
1621
*1
*2
1610
1611
1602
1601
1623
1622
W2.6 NYLON
PSW4 × 8
CASSETTE
COMPARTMENT ASSY

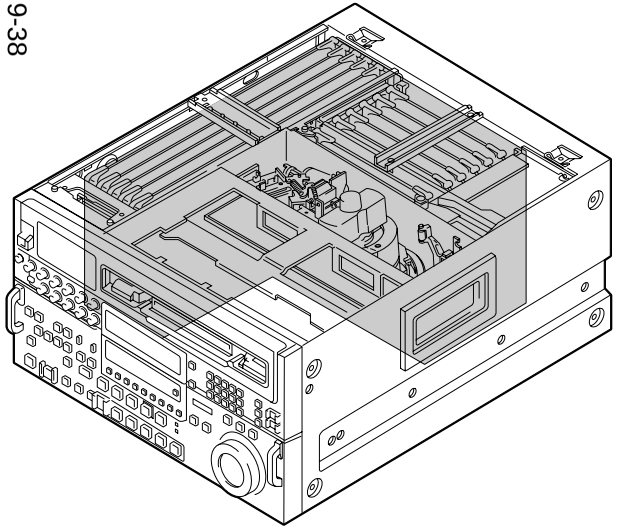

9-2-3. Mounted Circuit Board List

For DVW-A500P (EK)

No.	Part No.	SP	Description
1701	A-8275-268-C	o	MOUNTED CIRCUIT BOARD, VPR-1APG
1702	A-8275-144-B	o	MOUNTED CIRCUIT BOARD, APR-1 (for S/N 20808 and higher: DVW-A500P(EK))
	A-8275-072-A	o	MOUNTED CIRCUIT BOARD, APR-1P (for S/N 10001 thru. 20807: DVW-A500P(EK))
1703	A-8275-073-A	o	MOUNTED CIRCUIT BOARD, SS-52AP
1704	A-8275-139-B	o	MOUNTED CIRCUIT BOARD, DIF-16
1705	A-8275-079-B	o	MOUNTED CIRCUIT BOARD, TBC-23P
1706	A-8275-081-A	o	MOUNTED CIRCUIT BOARD, CUE-1AP
1707	A-8275-148-B	o	MOUNTED CIRCUIT BOARD, EQ-45A (for S/N 21323 and higher: DVW-A500P(EK))
	A-8275-084-A	o	MOUNTED CIRCCUIT BOARD, EQ-45AP (for S/N 10001 thru. 21322: DVW-A500P(EK))
1708	A-8275-143-B	o	MOUNTED CIRCUIT BOARD, DPR-36
1709	A-8275-086-A	o	MOUNTED CIRCUIT BOARD, AP-28P
1710	A-8275-087-A	o	MOUNTED CIRCUIT BOARD, TBC-24P
1711	A-8275-088-B	o	MOUNTED CIRCUIT BOARD, DM-89P
1718	3-180-646-02	o	GUIDE (L), PRINTED CIRCUIT BOARD
1719	3-180-674-01	o	GUIDE (S), PRINTED CIRCUIT BOARD

For DVW-A500P (UC)

No.	Part No.	SP	Description
1701	A-8275-268-C	o	MOUNTED CIRCUIT BOARD, VPR-1APG
1702	A-8275-144-B	o	MOUNTED CIRCUIT BOARD, APR-1 (for S/N 10309 and higher: DVW-A500P(UC))
	A-8275-269-A	o	MOUNTED CIRCUIT BOARD, APR-1PG (for S/N 10001 thru. 10308: DVW-A500P(UC))
1703	A-8275-073-A	o	MOUNTED CIRCUIT BOARD, SS-52AP
1704	A-8275-139-B	o	MOUNTED CIRCUIT BOARD, DIF-16P
1705	A-8275-271-B	o	MOUNTED CIRCUIT BOARD, TBC-23PG
1706	A-8275-272-A	o	MOUNTED CIRCUIT BOARD, CUE-1APG
1707	A-8275-148-B	o	MOUNTED CIRCUIT BOARD, EQ-45A (for S/N 10339 and higher: DVW-A500P(UC))
	A-8275-273-A	o	MOUNTED CIRCUIT BOARD, EQ-45APG (for S/N 10001 thru. 10338: DVW-A500P(UC))
1708	A-8275-143-B	o	MOUNTED CIRCUIT BOARD, DPR-36
1709	A-8275-086-A	o	MOUNTED CIRCUIT BOARD, AP-28P
1710	A-8275-087-A	o	MOUNTED CIRCUIT BOARD, TBC-24P
1711	A-8275-088-B	o	MOUNTED CIRCUIT BOARD, DM-89P
1718	3-180-646-02	o	GUIDE (L), PRINTED CIRCUIT BOARD
1719	3-180-674-01	o	GUIDE (S), PRINTED CIRCUIT BOARD

For DVW-500P (EK)

No.	Part No.	SP	Description
1701	A-8275-268-C	o	MOUNTED CIRCUIT BOARD, VPR-1APG
1702	A-8275-144-B	o	MOUNTED CIRCUIT BOARD, APR-1 (for S/N 16301 and higher: DVW-500P(EK))
	A-8275-072-A	o	MOUNTED CIRCUIT BOARD, APR-1P (for S/N 10001 thru. 16300: DVW-500P(EK))
1703	A-8275-146-A	o	MOUNTED CIRCUIT BOARD, SS-52P
1704	A-8275-139-B	o	MOUNTED CIRCUIT BOARD, DIF-16
1706	A-8275-152-A	o	MOUNTED CIRCUIT BOARD, CUE-1P
1707	A-8275-148-B	o	MOUNTED CIRCUIT BOARD, EQ-45A (for S/N 16616 and higher: DVW-500P(EK))
	A-8275-149-A	o	MOUNTED CIRCUIT BOARD, EQ-45P (for S/N 10001 thru. 16615: DVW-500P(EK))
1708	A-8275-143-B	o	MOUNTED CIRCUIT BOARD, DPR-36
1718	3-180-646-02	o	GUIDE (L), PRINTED CIRCUIT BOARD
1719	3-180-674-01	o	GUIDE (S), PRINTED CIRCUIT BOARD
1720	3-696-787-03	o	SHEET (S), CARD

For DVW-500P (UC)

No.	Part No.	SP	Description
1701	A-8310-268-C	o	MOUNTED CIRCUIT BOARD, VPR-1APG
1702	A-8275-144-B	o	MOUNTED CIRCUIT BOARD, APR-1 (for S/N 10211 and higher: DVW-500P(UC))
	A-8275-269-A	o	MOUNTED CIRCUIT BOARD, APR-1PG (for S/N 10001 thru. 10210: DVW-500P(UC))
1703	A-8275-146-A	o	MOUNTED CIRCUIT BOARD, SS-52P
1704	A-8275-139-B	o	MOUNTED CIRCUIT BOARD, DIF-16P
1706	A-8310-427-A	o	MOUNTED CIRCUIT BOARD, CUE-1PG
1707	A-8275-148-B	o	MOUNTED CIRCUIT BOARD, EQ-45A (for S/N 10216 and higher: DVW-500P(UC))
	A-8310-426-A	o	MOUNTED CIRCUIT BOARD, EQ-45PG (for S/N 10001 thru. 10215: DVW-500P(UC))
1708	A-8275-143-B	o	MOUNTED CIRCUIT BOARD, DPR-36
1718	3-180-646-02	o	GUIDE (L), PRINTED CIRCUIT BOARD
1719	3-180-674-01	o	GUIDE (S), PRINTED CIRCUIT BOARD
1720	3-696-787-03	o	SHEET (S), CARD

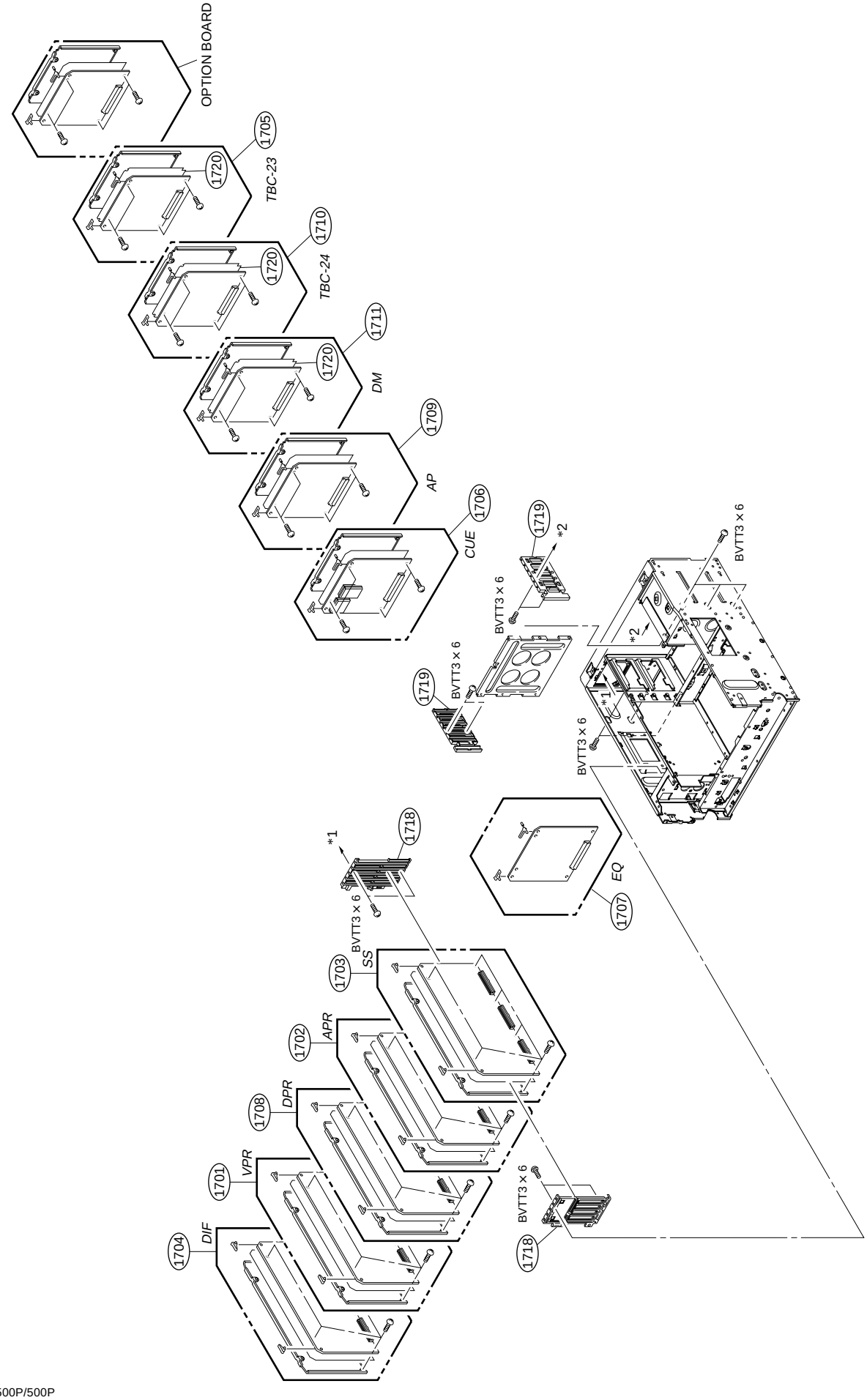
OPTION BOARD
1705
1720
TBC-23
1710
1720
TBC-24
1711
1720
DM
1709
AP
1706
CUE
1719
*2
BVTT3 × 6
BVTT3 × 6
1719
BVTT3 × 6
*2
*1
BVTT3 × 6
1718
*1
BVTT3 × 6
SS
1703
EQ
1707
APR
1702
DPR
1708
VPR
1701
DIF
1704
BVTT3 × 6
1718

9-2-4. Packing Materials and Supplied Accessories List

For DVW-A500P (EK)

Ref. No. or Q'ty	Part No.	SP	Description
1pc	⚠ 1-782-929-12	s	CORD, POWER SUPPLY (BS 3P)
1pc	3-613-640-01	o	HOLDER (C), PLUG
1pc	3-181-533-04	o	CUSHION (LOWER)
1pc	3-181-534-04	o	CUSHION (UPPER)
1pc	3-181-535-01	o	SPACER (A)
1pc	3-181-536-01	o	SPACER (B)
1pc	3-181-772-03	o	INDIVIDUAL CARTON
1pc	3-701-616-01	o	BAG, POLYETHYLENE
1pc	3-701-634-00	o	BAG, POLYETHYLENE (for S/N 10001 thru. 22907)
4pcs	7-682-965-01	s	SCREW +PSW 4X16

For DVW-A500P (UC)

Ref. No. or Q'ty	Part No.	SP	Description
1pc	⚠ 1-782-929-12	s	CORD, POWER SUPPLY (BS 3P)
1pc	3-613-640-01	o	HOLDER (C), PLUG
1pc	3-181-533-04	o	CUSHION (LOWER)
1pc	3-181-534-04	o	CUSHION (UPPER)
1pc	3-181-535-01	o	SPACER (A)
1pc	3-181-536-01	o	SPACER (B)
1pc	3-181-772-03	o	INDIVIDUAL CARTON
1pc	3-701-616-01	o	BAG, POLYETHYLENE
1pc	3-701-634-00	o	BAG, POLYETHYLENE (for S/N 10001 thru. 10388)
4pcs	7-682-965-01	s	SCREW +PSW 4X16

For DVW-500P (EK)

Ref. No. or Q'ty	Part No.	SP	Description
1pc	⚠ 1-551-812-11	s	CORD, POWER 3P
1pc	2-990-242-01	o	HOLDER (B), PLUG
1pc	3-181-533-04	o	CUSHION (LOWER)
1pc	3-181-534-04	o	CUSHION (UPPER)
1pc	3-181-535-01	o	SPACER (A)
1pc	3-181-536-01	o	SPACER (B)
1pc	3-181-774-03	o	INDIVIDUAL CARTON
1pc	3-701-616-01	o	BAG, POLYETHYLENE
1pc	3-701-634-00	o	BAG, POLYETHYLENE (for S/N 10001 thru. 17150)
4pcs	7-682-965-01	s	SCREW +PSW 4X16

For DVW-500P (UC)

Ref. No. or Q'ty	Part No.	SP	Description
1pc	⚠ 1-551-812-11	s	CORD, POWER 3P
1pc	2-990-242-01	o	HOLDER (B), PLUG
1pc	3-181-533-04	o	CUSHION (LOWER)
1pc	3-181-534-04	o	CUSHION (UPPER)
1pc	3-181-535-01	o	SPACER (A)
1pc	3-181-536-01	o	SPACER (B)
1pc	3-181-774-03	o	INDIVIDUAL CARTON
1pc	3-701-616-01	o	BAG, POLYETHYLENE
1pc	3-701-634-00	o	BAG, POLYETHYLENE (for S/N 10001 thru. 10230)
4pcs	7-682-965-01	s	SCREW +PSW 4X16

9-3. SPARE PARTS LIST – OPTIONAL ACCESSORIES –
9-3. 補修部品リスト – オプション –

9-3-1. Index
9-3-1. インデックス

Model Name		Page
BKDW-505/506 (*1)	Analog Composite Decoder Board	—
BKDW-507 (*1)	Audio Program Play Board	—
BKDW-509	Parallel (50P) Interface Kit	9-43
BKDW-510	Control Panel Extension Kit	9-44
BKDW-511	Control Panel Case	9-45
BKDW-514	Control Panel	9-30
BKDW-515 (*2)	Control Panel	—

(*1) Please order the standard products.
製品をお求めください。

(*2) Please refer to the Installation and Maintenance Manual for BKDW-515 (3-188-821-).
BKDW−515用のInstallation and Maintenance Manual (3−188−820−)をご覧ください。

9-3-2. BKDW-509

Exploded View

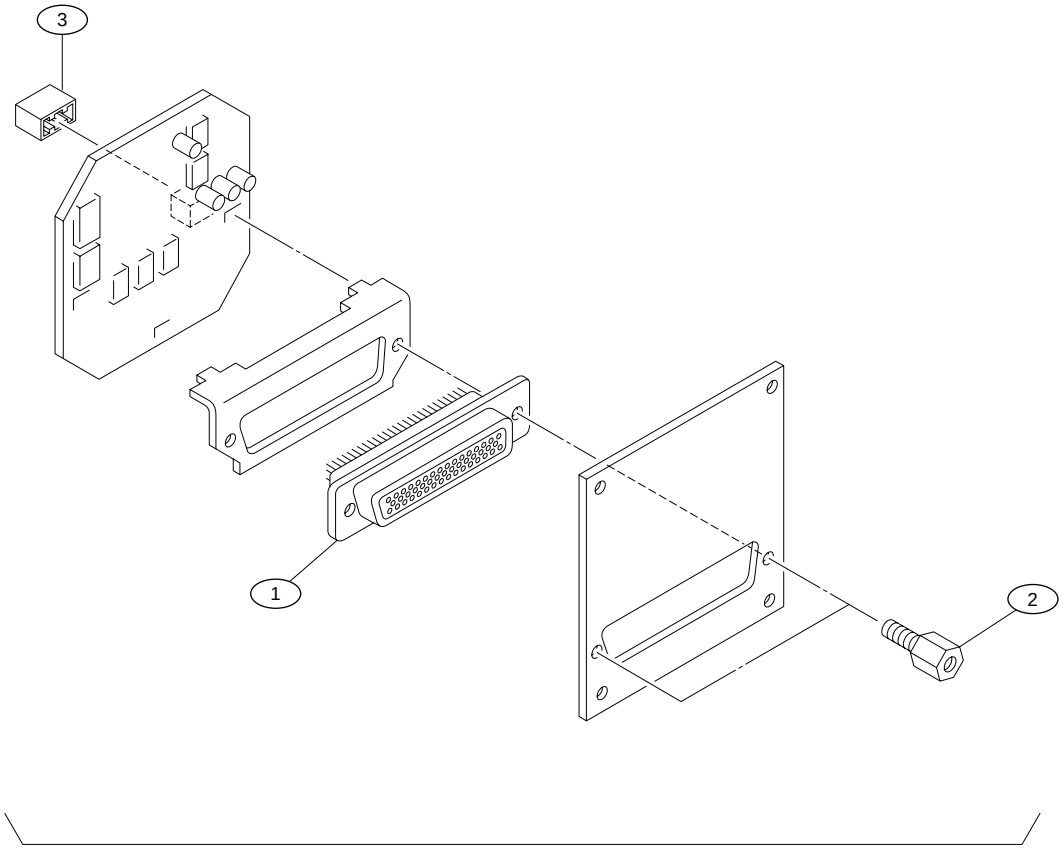

RM-130

No.	Part No.	SP	Description
1	1-563-893-21	s	SOCKET, D-SUB CONNECTOR 50P
2	3-673-910-31	s	SCREW, CONNECTOR
3	3-184-609-01	o	GUIDE, CONNECTOR

9-3-3. BKDW-510

Exploded View

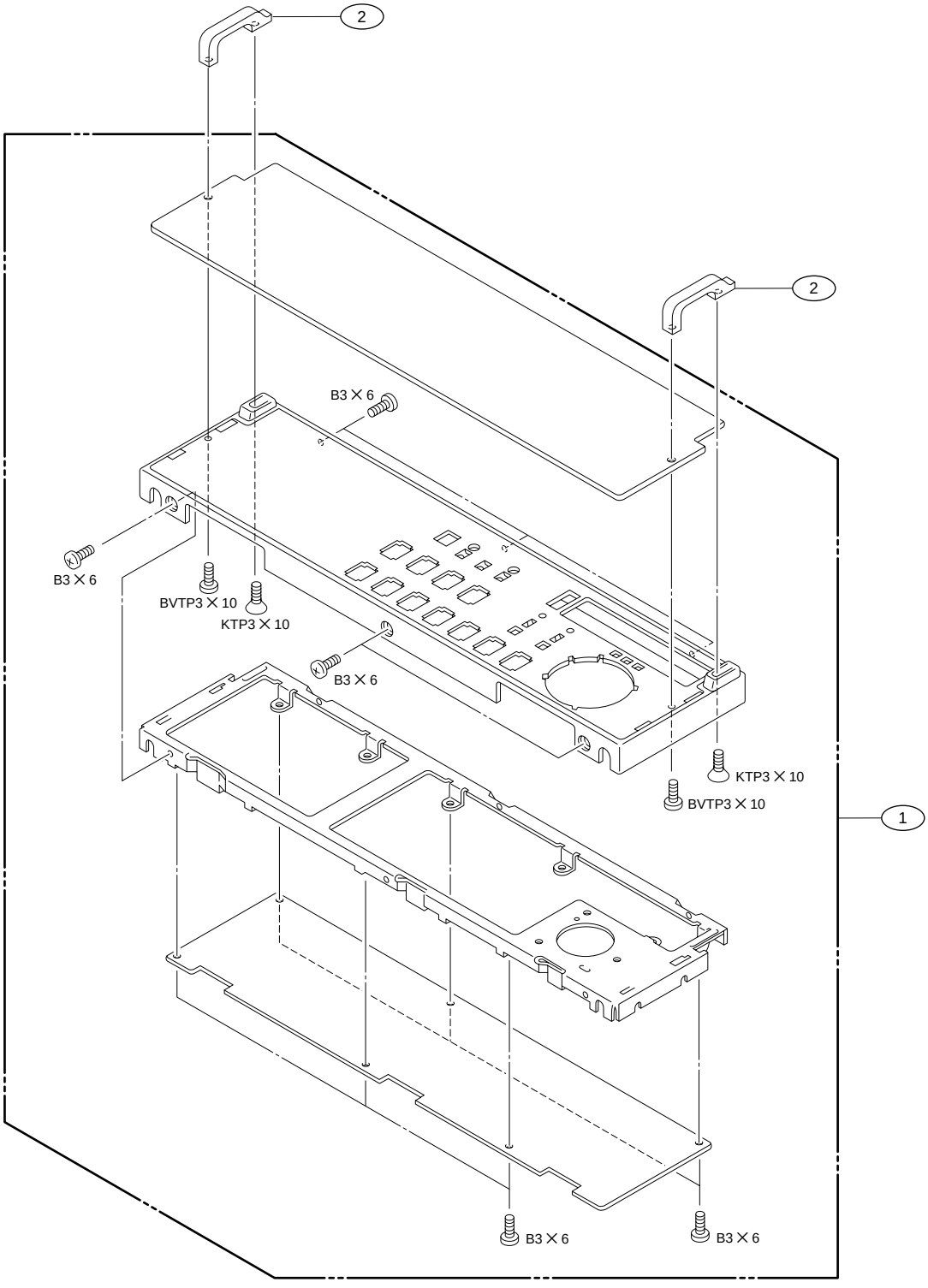

No.	Part No.	SP	Description
1	A-6768-668-B	o	PANEL ASSY, BLANK
2	3-717-425-01	o	HANDLE
1pc	1-751-316-11	o	CABLE ASSY, ENCAPSULATED

9-3-4. BKDW-511

Exploded View

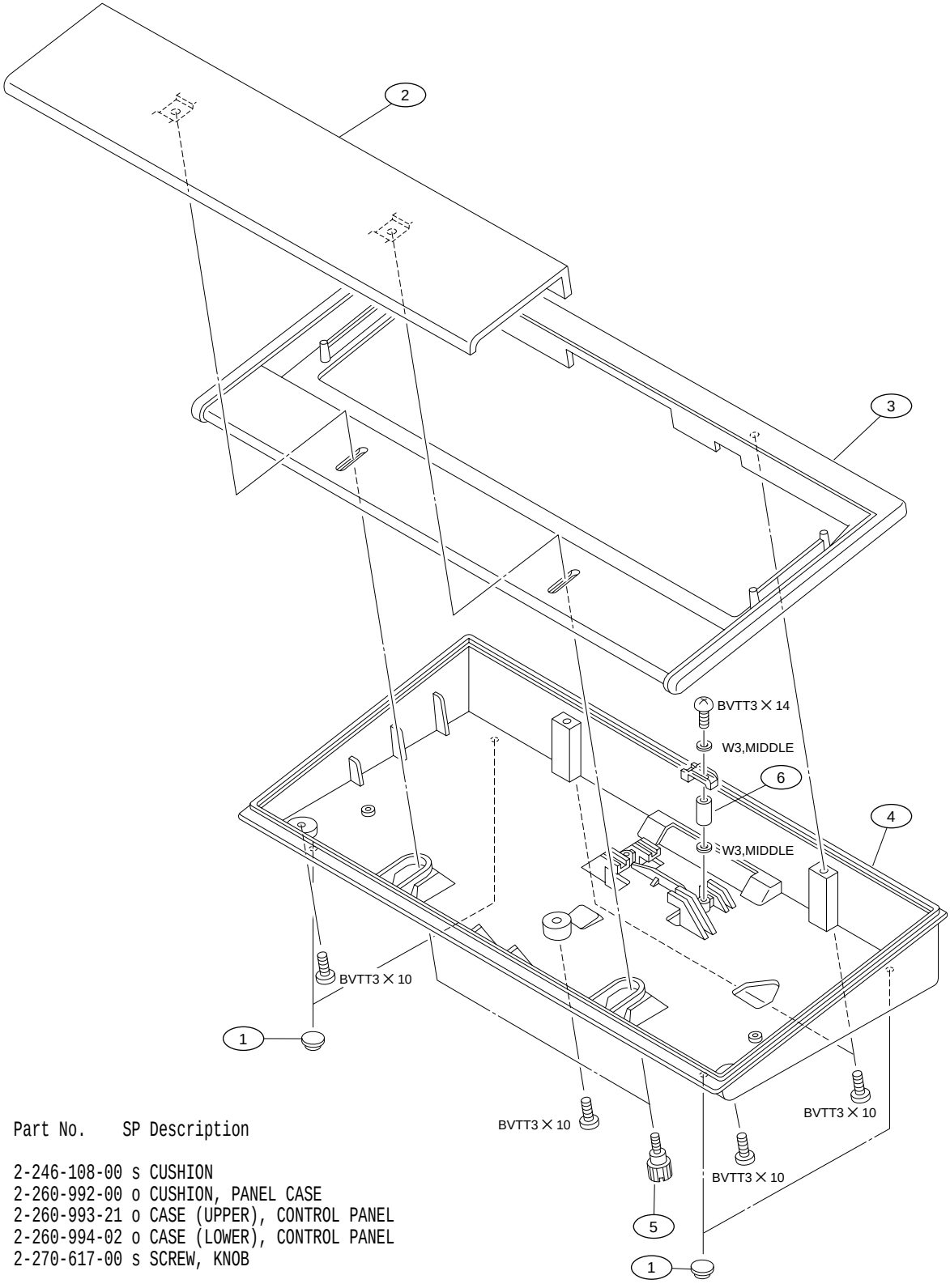

No.	Part No.	SP	Description
1	2-246-108-00	s	CUSHION
2	2-260-992-00	o	CUSHION, PANEL CASE
3	2-260-993-21	o	CASE (UPPER), CONTROL PANEL
4	2-260-994-02	o	CASE (LOWER), CONTROL PANEL
5	2-270-617-00	s	SCREW, KNOB
6	3-661-588-00	o	SPACER, 3X5

9-4. Spare Parts List

Part No.	SP	Description
7-621-255-15	s	SCREW +P 2X3
7-621-259-25	s	CSREW +PWH 2.6X4
7-621-260-55	s	SCREW +P 2.6X25
7-621-283-10	s	SCREW +P 2X10
7-621-559-20	s	SCREW +K 2.6X4
7-621-721-06	s	SET-SCREW, SLOT 2X2.5 (FLAT)
7-621-733-08	s	SET-SCREW, HEX 2X4 (FLAT)
7-621-734-09	s	SET-SCREW, HEX 2.6X3 (WP)
7-621-740-08	s	SET-SCREW, HEX 2.6X6 (FLAT)
7-621-772-00	s	SCREW +B 2X3
7-621-772-10	s	SCREW +B 2X4
7-621-772-20	s	SCREW +B 2X5
7-621-772-50	s	SCREW +B 2X10
7-621-773-95	s	SCREW +B 2.6X6
7-621-775-20	s	SCREW +B 2.6X5
7-621-775-80	s	SCREW +B 2.6X16
7-622-207-05	s	N 2.6, TYPE 2
7-623-205-22	s	SW 2, TYPE 2
7-623-207-22	s	SW 2.6, TYPE 2
7-623-422-07	s	LW3, TYPE B
7-623-510-01	s	LUG, 4
7-623-923-11	s	WASHER 2.6, NYLON
7-623-924-11	s	WASHER 3.0, NYLON
7-624-105-04	s	STOP RING 2.3 (E TYPE)
7-624-106-04	s	STOP RING 3.0 (E TYPE)
7-624-108-04	s	STOP RING 4.0 (E TYPE)
7-628-253-00	s	SCREW +PS 2X4
7-628-253-15	s	SCREW +PS 2X5
7-628-253-20	s	SCREW +PS 2X6
7-628-253-35	s	SCREW +PS 2X8
7-628-254-30	s	SCREW +PS 2.6X10
7-671-155-01	s	BALL 3, STEEL
7-682-544-04	s	SCREW +B 3X3
7-682-545-09	s	SCREW +B 3X4
7-682-546-09	s	SCREW +B 3X5
7-682-547-09	s	SCREW +B 3X6
7-682-548-09	s	SCREW +B 3X8
7-682-550-09	s	SCREW +B 3X12
7-682-551-09	s	SCREW +B 3X14
7-682-552-09	s	SCREW +B 3X16

Part No.	SP	Description
7-682-646-09	s	SCREW +PS 3X5
7-682-648-09	s	SCREW +PS 3X8
7-682-661-01	s	SCREW +PS 4X8
7-682-661-09	s	SCREW +PSW 4X8
7-682-666-09	s	SCREW +PS 4X20
7-682-668-09	s	SCREW +PSW 4X30
7-682-902-11	s	SCREW +PWH 2.6X5
7-682-903-21	s	SCREW +PWH 3X8
7-682-947-01	s	SCREW +PSW 3X6
7-682-948-01	s	SCREW +PSW 3X8
7-682-949-01	s	SCREW +PSW 3X10
7-682-962-01	s	SCREW +PSW 4X10
7-682-965-01	s	SCREW +PSW 4X16
7-683-174-01	s	SET-SCREW, SLOT 3X4 (FLAT)
7-683-176-01	s	SET-SCREW, SLOT 3X6 (FLAT)
7-683-176-21	s	SET-SCREW, SLOT 3X6 (CONE)
7-684-023-04	s	N 3, TYPE 2
7-685-103-19	s	SCREW +P 2X5 TYPE2 NON-SLIT
7-685-105-19	s	SCREW +PTP 2X8 TYPE2 NON-SLIT
7-685-134-19	s	SCREW +P 2.6X8 TYPE2 NON-SLIT
7-685-247-19	s	SCREW +KTP 3X10 TYPE2 NON-SLIT
7-685-646-79	s	SCREW +BVTP 3X8 TYPE2 IT-3
7-685-865-09	s	SCREW +BVTT 2.6X12 (S)
7-685-866-01	s	SCREW +BVTT 2.6X14 (S)
7-685-871-01	s	SCREW +BVTT 3X6 (S)
7-685-871-09	s	SCREW +BVTT 3X6 (S, BLACK)
7-685-872-09	s	SCREW +BVTT 3X8 (S)
7-685-873-09	s	SCREW +BVTT 3X10 (S)
7-685-875-09	s	SCREW +BVTT 3X14 (S)
7-685-879-01	s	SCREW +BVTT 3X30 (S)
7-685-881-01	s	SCREW +BVTT 4X8 (S)
7-685-902-01	s	SCREW +PTPWH 2.6X5 (TYPE2)
7-685-903-11	s	SCREW +PTPWH 3X6 (TYPE2)
7-685-903-21	s	SCREW +PTPWH 3X8 (TYPE2)
7-688-001-01	s	W 2, SMALL
7-688-001-11	s	W 2, MIDDLE
7-688-002-11	s	W 2.6, MIDDLE
7-688-003-01	s	W 3, SMALL
7-688-003-11	s	W 3, MIDDLE
7-688-004-11	o	SW 4, MIDDLE

このマニュアルに記載されている事柄の著作権は当社にあり，説明内容は機器購入者の使用を目的としています。
従って，当社の許可なしに無断で複写したり，説明内容(操作，保守等)と異なる目的で本マニュアルを使用することを禁止します。

The material contained in this manual consists of information that is the property of Sony Corporation and is intended solely for use by the purchasers of the equipment described in this manual.
Sony Corporation expressly prohibits the duplication of any portion of this manual or the use thereof for any purpose other than the operation or maintenance of the equipment described in this manual without the express written permission of Sony Corporation.

Le matériel contenu dans ce manuel consiste en informations qui sont la propriété de Sony Corporation et sont destinées exclusivement à l'usage des acquéreurs de l'équipement décrit dans ce manuel.
Sony Corporation interdit formellement la copie de quelque partie que ce soit de ce manuel ou son emploi pour tout autre but que des opérations ou entretiens de l'équipement à moins d'une permission écrite de Sony Corporation.

Das in dieser Anleitung enthaltene Material besteht aus Informationen, die Eigentum der Sony Corporation sind, und ausschließlich zum Gebrauch durch den Käufer der in dieser Anleitung beschriebenen Ausrüstung bestimmt sind.
Die Sony Corporation untersagt ausdrücklich die Vervielfältigung jeglicher Teile dieser Anleitung oder den Gebrauch derselben für irgendeinen anderen Zweck als die Bedienung oder Wartung der in dieser Anleitung beschriebenen Ausrüstung ohne ausdrückliche schriftliche Erlaubnis der Sony Corporation.

DVW-A500P (UC,EK)
DVW-500P (UC,EK)
DVW-A500P/1 (UC,EK)
DVW-500P/1 (UC,EK) E
3-180-856-12

Sony Corporation
B&P Company

Printed in Japan
2003. 12 08
©1993